PNT Consulting LLC
Abrasive Blasting and Silica Awareness

Purpose

This program has been developed to establish procedures outlining the safety requirements for abrasive blasting to protect **PNT Consulting LLC** employees. This procedure applies to all employees and subcontractors working within **PNT Consulting LLC** controlled worksites. This Abrasive Blasting and Silica Awareness covers the minimum requirements to perform abrasive blasting.

Introduction

Abrasive blasting is primarily used for surface preparation of metal surfaces to prepare them to accept a coating or lining. This procedure covers the safety requirements pertaining to mechanical precautions, personal protective equipment, housekeeping and sanitation, administrative dust control methods, and respiratory protection.

General Requirements

All employees who are subjected to silica exposure shall be provided information about adverse health effects, work practices, chemical safety as required by the Hazard Communication Standard, and training in the proper use and care of personal protective equipment.

Training shall be documented in writing with the employee's name, date of training, instructor and a copy of materials presented. These records shall be maintained by the company throughout the employee's tenure and for 30 years thereafter.

Program

Mechanical precautions

- Machines and hoses shall be inspected as per maintenance schedule and all parts showing excessive wear shall be repaired or replaced.
- Nozzles shall be externally attached to the hose by a fitting, which will prevent accidental disengagement.
- The blast cleaning nozzle shall be equipped with an operating valve which must be held open manually.
- Lengths of hose should be joined by external metallic connectors. The connectors shall have pin-clips to prevent disengagement. Anti-whip arresters shall be used between each connector.
- All Bull Hoses, from the compressor to the abrasive blast pot, shall have pin clips and anti-whip arresters on each end.

Personal Protective Equipment

- Operators shall be equipped with heavy canvas or leather gloves and aprons. Standard required work boots shall be worn. (as per PPE Policy)
- Eye, face, hearing and respiratory protection shall be supplied to all personnel working.
- Precautions shall be taken to protect personnel in the blasting zone including the blasting operator from excessive noise exposure by supplying and requiring the use of earplugs or muffs.
- Vortex tubes which cool the air supply to the blasters hood should be considered depending on season and exposure of the employee to heat sources.

Housekeeping and Sanitation

- Good housekeeping practices shall be followed in abrasive blasting operation to prevent slips, trips, and falls.
- A facility should be available for blasters to wash before eating and after blasting operations.

Administrative Dust Control Methods

Isolation

Most of the blasting, as possible, should be done in a specified location. A blasting zone where dust is visible should be established and marked off with signs around the perimeter of the area such as:

CAUTION
Abrasive Blasting Area, Eye and Ear Protection and
Respirators Must Be Worn In This Area.

Blasting should not be done when wind direction and velocity carry visible dust to people unprotected by proper respirators.

Enclosure

Blasting of small objects should be done in an enclosure which is designed to specifically reduce the dust hazards.

Respiratory Protection

Apron and dust collar, properly fitted and properly worn, shall be used by all persons blasting. In addition to the hood, blasters should also wear a disposable respirator when working in a high dust concentration. This would provide protection when the blasting operation has ceased and the blaster is removing the air supplied equipment or when merely taking a break.

- Abrasive-blasting hoods shall be worn by all abrasive-blasting operators;
- At all times,
- When working inside of blast-clean rooms,
- When using silica sand in manual blasting operations where the nozzle and blast are not physically separated from the operator in an exhaust ventilated enclosure, and
- Where concentrations of toxic dust dispersed by the abrasive blasting may exceed the provincial OHS limits and
- The nozzle and blast are not physically separated from the operator in an exhaust-ventilated enclosure.

Particulate filter respirators, commonly referred to as dust-filter respirators, properly fitted, may be used for short, intermittent, or occasional dust exposure such as clean-up, dumping of dust collectors, or unloading shipments of sand at a receiving point, when it is not feasible to control the dust by enclosure, exhaust ventilation, or other means. Respirators used shall be certified for protection against the specific type of dust.

Dust-filter respirators may be used to protect the operator of outside abrasive-blasting operations where non-silica abrasives are used on materials having low toxicities. Dust-filter respirators shall not be used for continuous protection where silica sand is used as the blasting abrasive, or toxic materials are blasted.

Maintenance

Respirators should be cleaned daily. This can be accomplished by use of vacuum or water. Respirators should be kept in maximum operating condition at all times. After their daily cleaning, respirators and hoods should be kept and hung in an upright position to prevent sand spilling inside.

Air Supply and Air Compressors for Abrasive Blasting Hoods

Air supply shall be free of harmful quantities of dust, mists or noxious gases, and shall meet Grade D requirements. The air from the regular compressed air line of a compressor unit may be used for the abrasive-blasting hood if:

- A trap and carbon filter is installed that will remove oil, water particulate and odor and is regularly maintained. A record of the maintenance of these filters should be kept.
- A pressure reducing diaphragm or valve is installed to reduce the pressure to requirements of the particular type of abrasive blasting respirator.
- An automatic control is provided to either sound an alarm or shut down the compressor in case of overheating.
- Periodic checks should be made to ensure low amounts of carbon monoxide, >5 ppm, are not being emitted to the worker.

NIOSH Recommendations

NIOSH recommends the following measures to reduce exposures to respirable crystalline silica in the workplace and to prevent silicosis and deaths in construction workers:

- Recognize when silica dust may be generated and plan ahead to eliminate or control the dust at the source. Awareness and planning are keys to prevention of silicosis.
- Do not use silica sand or other substances containing more than 1% crystalline silica as abrasive blasting materials. Substitute less hazardous materials.
- Use engineering controls and containment methods such as blast-cleaning machines and cabinets, wet drilling, or wet sawing of silica-containing materials to control the hazard and protect adjacent workers from exposure.
- Routinely maintain dust control systems to keep them in good working order.
- Practice good personal hygiene to avoid unnecessary exposure to other worksite contaminants such as lead.
- Wear disposable or washable protective clothes at the worksite.
- Shower (if possible) and change into clean clothes before leaving the worksite to prevent contamination of cars, homes, and other work areas.
- Conduct air monitoring to measure worker exposures and ensure that controls are providing adequate protection for workers.
- Use adequate respiratory protection when source controls cannot keep silica exposures below the NIOSH PEL.
- Provide periodic medical examinations for all workers who may be exposed to respirable crystalline silica.
- Post warning signs to mark the boundaries of work areas contaminated with respirable crystalline silica.
- Provide workers with training that includes information about health effects, work practices, and protective equipment for respirable crystalline silica.

Dust Control

The key to preventing silicosis is to keep dust out of the air. Dust controls can be as simple as a water hose to wet the dust before it becomes airborne. Use the following methods to control respirable crystalline silica;

- Use the dust collection systems available for many types of dust-generating equipment. When purchasing equipment, look for dust controls. Use local exhaust ventilation to prevent dust from being released into the air. Always use the dust control system, and keep it well maintained. Do not use equipment if the dust control system is not working properly.
- During rock drilling, use water through the drill stem to reduce the amount of dust in the air, or use a drill with a dust collection system. Use drills that have a positive pressure cab with air conditioning and filtered air supply to isolate the driller from the dust.
- When sawing concrete or masonry, use saws that provide water to the blade.
- Use good work practices to minimize exposures and to prevent nearby workers from being exposed. For example, remove dust from equipment with a water hose rather than with compressed air. Use vacuums with high-efficiency particulate air (HEPA) filters, or use wet sweeping instead of dry sweeping.
- Use abrasives containing less than 1% crystalline silica during abrasive blasting to prevent quartz dust from being released in the air.
- Use containment methods such as blast-cleaning machines and cabinets to prevent dust from being released into the air.

Personal Hygiene

The following personal hygiene practices are essential for protecting workers from respirable crystalline silica and other contaminants such as lead, particularly during abrasive-blasting operations [NIOSH 1991a];

- Do not eat, drink, or use tobacco products in dusty areas.
- Wash hands and face before eating, drinking, or smoking outside dusty areas.
- Park cars where they will not be contaminated with silica and other substances such as lead.

Protective Clothing

Take the following steps to assure that dusty clothes do not contaminate cars, homes, or worksites outside the dusty area:

- Change into disposable or washable work clothes at the worksite.
- Shower and change into clean clothes before leaving the worksite.

Air Monitoring

Air monitoring is needed to measure worker exposures to respirable crystalline silica and to select appropriate engineering controls and respiratory protection. Perform air monitoring as needed to measure the effectiveness of controls. Collect and analyze air samples according to NIOSH Method Nos. 7500 and 7602 [NIOSH 1994] or their equivalent.

IMPORTANT HEALTH INFORMATION REGARDING SILICA

Silicosis is a deadly disease characterized by shortness of breath, fever and bluish skin. Sometimes it may be diagnosed as pulmonary edema (fluid in lungs), pneumonia or tuberculosis. Silica dust causes severe fungal infections to develop. This condition can cause death.

Types, Symptoms and Complications of Silicosis

There are three types of silicosis, depending upon the airborne concentration of crystalline silica to which a worker has been exposed:

- Chronic silicosis usually occurs after 10 or more years of overexposure.
- Accelerated silicosis results from higher exposures and develops over 5-10 years.
- Acute silicosis occurs where exposures are the highest and can cause symptoms to develop within a few weeks or up to 5 years.

Chronic silicosis, the most common form of the disease, may go undetected for years in the early stages; in fact, a chest X-ray may not reveal an abnormality until after 15 or 20 years of exposure. The body's ability to fight infections may be overwhelmed by silica dust in the lungs, making workers more susceptible to certain illnesses, such as tuberculosis.

As a result, workers may exhibit one or more of the following symptoms:

- shortness of breath following physical exertion
- severe cough
- fatigue
- loss of appetite
- chest pains
- fever

Specific engineering controls can be implemented that will reduce or eliminate occupational exposure to silica in abrasive blasting operations. These include:

- Use of an alternate blasting media
- Containment methods such as blast cleaning machines and cabinets
- Use of blasting rooms or portable equipment.

Air monitoring shall be performed to measure worker exposure to airborne crystalline silica and to provide a basis for selecting engineering controls.

Personal hygiene is an essential component in employee safety regarding exposure to silica. For example:

- All sandblasters should wash their hands and faces before eating, drinking or smoking.
- No eating, drinking or tobacco products are allowed the blasting area.
- Workers should shower before leaving worksite.
- Vehicles should not be parked in an area contaminated by silica products.

Protective clothing is an important safety measure when working with silica products.

- Workers should change into disposable or washable work clothes at the worksite.
- Workers should change into clean clothing before leaving the worksite.

Medical monitoring of workers exposed to crystalline silica is required under this program. Such examinations shall be conducted prior to job placement and at least every three years thereafter. More frequent examinations (for example, annual) may be necessary for workers at risk, or in suspected cases of acute or accelerated silicosis.

Examinations should include at least the following components:

- A medical and occupational history of the individual employee to collect data on worker exposure.
- Chest X-rays.
- Pulmonary function testing.
- Annual evaluation for tuberculosis.

Warning signs shall be posted to communicate to workers and individuals in the area about the hazards of silica exposure and to specify any protective equipment required.
The National Institute of Occupational Safety and Health (NIOSH) encourages reporting of all cases of silicosis to the appropriate state health departments, OSHA or MSHA.
Applicable OSHA Standard: 29 CFR 1910.94

All records shall be maintained by the company throughout the employee's tenure and for 30 years thereafter.

Access to Employee Exposure and Medical Records

Purpose

The purpose of this section is to provide employees and their designated representatives a right of access to relevant exposure and medical records in order to fulfill responsibilities under the Occupational Safety and Health Act. Access by employees and their representatives, is necessary to yield both direct and indirect improvements in the detection, treatment, and prevention of occupational disease.

Scope

This section applies to all employee exposure and medical records, and analyses thereof, made or maintained in any manner, including an in-house or contractual basis. The Company shall assure that the preservation and access requirements of this section are complied with regardless of the manner in which records are made or maintained.

Content

1. Notification
2. Record Keeping
3. Access
4. Transfer of records
5. References

Notification

Upon initial employment employees will be briefed and at least annually thereafter, informed via a bulletin board posting of the following:

a. The existence, location and availability of employee records for exposure to toxic substances or harmful physical agents.

b. The person responsible for maintaining and providing access to the records. Contact your Resources Manager or Safety Representative to initiate this request.

c. The employee right of access to those records.

d. The entire section pertaining to the Access to Employee Exposure and Medical Records is available for employee review by contacting the Safety Representative.

Record Keeping Access to Employee Exposure and Medical Records

The Human Resources Manager is responsible for maintaining and providing access to employees' medical records. These records are kept separately from other employee records.

The medical records of employees who have worked for less than (1) year for the employer need not be retained beyond the term of employment if they are provided to the employee upon the termination of employment.
Employee exposure records shall be maintained for the duration of employment and for 30 years thereafter and should include the following:

a. Environmental (workplace) monitoring including personal, area, grab, swipe (wipe over a designated area), etc. type samples.

b. Biological monitoring—level of chemical in the blood, urine, hair, fingernails, etc.

c. Material safety data sheets or a chemical inventory or any other record which reveals where and when used and the identify (e.g., chemical, common, or trade name) of a toxic substance or harmful physical agent.

Access

Each employee or designated representative has the right to request access to his/her records.
The company shall assure that access is provided in a reasonable time, place, and manner.
The employee may access his/her records by making a request to the Human Resources Manager or Safety Representative. The company will release an employee's medical records only if the employee has given specific, written consent *(see Attachment A)*.
If the company cannot reasonably provide access to the record within fifteen (15) working days, the company shall within the fifteen (15) working days apprise the employee or designated representative requesting the record of the reason for the delay and the earliest date when the record can be made available.
In the case of an original X-ray, the employer may restrict access to on-site examination or make other suitable arrangements for the temporary loan of the X-ray.
Records or copies will be provided at no cost to the employee.

a. Whenever a record has been previously provided without cost to an employee or designated representative, the company may charge reasonable, non-discriminatory administrative costs (i.e., search and copying expenses but not including overhead expenses) for a request by the employee or designated representative for additional copies of the record.

b. No charge for an initial request for a copy of new information that has been added to a record which was previously provided.

c. No charge for an initial request by a recognized or certified collective bargaining agent for a copy of an employee exposure record or an analysis using exposure or medical records.

Transfer of records

Whenever the company ceases to do business, the company shall transfer all records subject to this section to the successor employer. The successor employer shall receive and maintain these records.

Whenever the company ceases to do business and there is no successor employer to receive and maintain the records subject to this standard, the company shall notify affected employees of their rights of access to records at least three (3) months prior to the cessation of business.

Access to Employee Exposure and Medical Records

Attachment A

Authorization letter for the release of employee medical record information to a designated representative

I, _____, (full name of worker/patient) hereby authorize _____ (individual or organization holding the medical records) to release to _____ (individual or organization authorized to receive the medical information), the following medical information from my personal medical records:

_____

_____

_____

(Describe generally the information desired to be released).

I give my permission for this medical information to be used for the following purpose:

_____

_____

But I do not give permission for any other use or re-disclosure of this information.

(Note: Several extra lines are provided below so that you can place additional restrictions on this authorization letter if you want to. You may, however, leave these lines blank. On the other hand, you may want to (1) specify a particular expiration date for this letter (if less than one year); (2) describe medical information to be created in the future that you intend to be covered by this authorization letter; or (3) describe portions of the medical information in your records which you do not intend to be released as a result of this letter.)

_____

_____

_____

_____

_____

_____

_____

Full name of Employee or Legal Representative Date

_____

Signature of Employee or Legal Representative Date

Aerial Lift Operations

Policy

Aerial personnel lifts shall be operated, maintained, and controlled in a safe manner.

Purpose

To define the procedures and standards that apply to the care, control, maintenance, inspection, and operation of aerial personnel lifts.

Scope

Applies to all **PNT Consulting LLC** work sites, i.e., **PNT Consulting LLC** offices, client job sites, etc., requiring the use of aerial personnel lifts.

Definitions

Aerial personnel lift means any vehicle-mounted device, telescoping or articulating, or both, which is used to position personnel. These include extensible boom platforms, aerial ladders, articulating boom platforms, vertical towers, and a combination of any of the above.

Articulating boom platform means an aerial personnel lift with two or more hinged boom sections.

Extension boom platform means an aerial personnel lift (except ladders) with a telescopic or extension boom. Telescopic derricks with personnel platform attachments shall be considered to be extension boom platforms when used with a personnel platform.

Insulated aerial device means an aerial personnel lift designed for work on energized lines and apparatus.

Platform means any personnel-carrying device (basket or bucket) that is a component of an aerial personnel lift.

Vertical tower means an aerial personnel lift designed to elevate a platform in a substantially vertical axis.

Requirements

General

Equipment that is not designed for use as a personnel lift shall not be used as a personnel lift (e.g., front end loader buckets, backhoe buckets and cranes).

Only trained personnel who have been deemed competent and designated by their supervisor are authorized to operate aerial personnel lifts.

Lift controls shall be tested prior to use to determine that such controls are in safe working condition.

Review and follow electrical safety requirements for use of aerial personnel lifts as found in **PNT Consulting Electrical Safety Plan dated 3-2022**

Review and follow fall protection requirements for aerial personnel lifts identified in Personnel should not be permitted to stand on the rails of aerial devices. A body harness shall be worn and a lanyard appropriately attached.

Personnel should not be permitted to stand on the rails of aerial devices. A body harness shall be worn and a lanyard appropriately attached.

Personnel shall not be permitted to use an aerial personnel lift as a means of access. In the event that there are no other means of access, specific procedures including rationale (feasibly), duration, evacuation, fall protection, etc. shall be developed and reviewed with affected employees prior to implementation.

Large or excessive amounts of material, excluding tools, shall not be transported in an aerial personnel lift. Other material lifts would be necessary for such activities.

Load limits specified by the manufacturer shall not be exceeded.

Aerial personnel lifts that can operate horizontally shall set brakes and outriggers, when used, be positioned on pads or a solid surface, and chock wheels before using on an incline.

Boom and Ladder Lift Units

Before ladder trucks and tower trucks are moved from site to site, the aerial ladders shall be secured in the lower traveling position by the locking device above the truck cab, and the manually operated device at the base of the ladder, or by other equally effective means (e.g., cradles which prevent rotation of the ladder in combination with positive acting linear actuators).

An aerial lift truck may not be moved when the boom is elevated in a working position with personnel in the basket, except for equipment that is specifically designed for this type of operation.

Articulating boom and extendible boom platforms, primarily designed as personnel carriers, shall have both platform (upper) and lower controls. Upper controls shall be in or beside the platform within easy reach of the operator. Lower controls shall provide for overriding the upper controls. Controls shall be plainly marked as to their function. Lower level controls shall not be operated unless permission has been obtained from the employee in the lift, except in case of emergency.

The insulated aerial devices shall not be altered in any manner that might reduce its insulating value. The insulated boom of a lift shall be regularly maintained and certified to ensure the continued insulating properties.

Before moving an aerial lift for travel, the boom(s) shall be inspected to see that it is properly cradled and outriggers are in stowed position.

Modifications

Aerial lifts may be "field modified" for uses other than those intended by the manufacturer, provided the modification has been certified in writing.

References

OSHA CFR 29 1926.453, .952(b), and .955(e)(12)
OSHA CFR 29 1910.67(b)(2)

Asbestos Awareness

Policy

This safety guideline is intended to provide safety information to all **PNT Consulting LLC** employees regarding asbestos that adequate measures can be taken to limit exposures through controls in the workplace. NOTE: If **PNT Consulting LLC** employees are to work in areas where the contracting company has identified asbestos, these areas will be disclosed to us and rendered safe before work will begin. **PNT Consulting LLC** does not knowingly allow employees to work in areas where they will have exposure to asbestos. Any employee who knowingly enters a restricted asbestos area will be disciplined to their unsafe behavior.

GENERAL

Asbestos that may exist in refineries includes certain gaskets, brake linings, valve packing and old insulation.

Since non-asbestos insulation is being used in most refineries on new work installations, the highest probability for exposure will come during demolition or old insulation removal. However, Asbestos-containing material may be encountered in the following forms:

Valves, vessels, piping insulation, insulation cement, mastic, floor and roof tiling, transit wall siding, caulking, and automobile brake linings.

All asbestos removal within a refinery must be done by certified people who are licensed to remove asbestos. No **PNT Consulting LLC** employee is to work on any piping or vessel that contains "asbestos containing materials" unless properly protected and/or the material is encapsulated and will not fragmentize or peel off when working on it.

Asbestos is widely used, mineral-based material that is resistant to heat and corrosive chemicals. Depending of the chemical composition, fibers may range in texture from coarse to silky. The properties which make asbestos fibers so valuable to industry are its high tensile strength, flexibility, heat and chemical resistance, and good frictional properties.

WORK PRACTICES

PNT Consulting LLC employees are not to work on asbestos containing equipment or materials. If employees become aware of any potential exposure to asbestos, they are to immediately stop work and notify their supervisor/foreman. The supervisor/foreman is then responsible to inform the office for further information, but in no case allow work to proceed until the exposure to asbestos has been abated.

HEALTH HAZARDS

Asbestos fibers are carried into the body as airborne particles. These fibers can become embedded in the tissues of the lung and digestive system. Once the fibers become trapped in the lung's alveoli (air sacs), they cannot be removed.

Years of exposure to asbestos can cause a number of disabling and fatal diseases. Among these is asbestosis, an emphysema-like condition, lung cancer; mesothelioma, a cancerous tumor that spreads rapidly in the cells of membranes covering the lungs and body organs; and gastrointestinal cancer which is caused by ingesting asbestos-contaminated food.

Short term affects (acute)

May cause irritation and itching to the skin, coughing may occur.

Long term effects

Over exposure can result in lung cancer. Common symptoms include difficulty in breathing (if you climb a flight of steps and are out of breath) cough chest pains, clubbing of the fingers, (this common in advanced stages), risk for lung cancer is or multiplied if the worker exposed to asbestos also smokes.

WORK PRACTICES

PNT Consulting LLC employees should be aware of the following safe practices. To help reduce worker exposure to airborne fibers, asbestos must be handled, mixed, applied, removed, cut, scored or otherwise worked in a wet state. This "wet" method must also be sued when products containing asbestos are removed from bags, cartons, or containers. If this not possible, removal must be done in an enclosed or well-ventilated area.

Asbestos containing materials must not be applied by spray methods. Compressed air can be used to remove asbestos containing materials only if the compressed air is used in conjunction with an enclosed ventilated system designed to capture the dust cloud created by the compressed air.

HOUSEKEEPING

All surfaces must be maintained as free as practicable of accumulations of asbestos containing dust and waste. Floors and other surfaces contaminated with asbestos should only be cleaned by vacuuming and/or wet cleaning methods. Where vacuuming and/or wet cleaning is not feasible, shoveling, dry sweeping and dry clean-up of asbestos may be used. The use of compressed air for cleaning purpose is prohibited. Asbestos waste, scrap, debris, bags, containers, and equipment must be disposed of in sealed impermeable bags or containers.

Asbestos Compliance Program for Construction

NOTE: All regulation references are to 29 CFR 1926.1101 unless otherwise stated.

Purpose

The purpose of this program is to inform interested persons, including employees, that **PMNT Consulting LLC** is complying with OSHA's asbestos standard, Title 29 Code of Federal Regulations 1926.1101 by ensuring that:

- No employee is exposed to an airborne concentration of asbestos in excess of 0.1 f/cc (fibers per cubic centimeter of air) as an eight-hour time-weighted average (TWA).
- No employee is exposed to an airborne concentration of asbestos in excess of 1.0 f/cc (excursion limit) as averaged over a sampling period of 30 minutes.
- Assess all asbestos operations for their potential to generate airborne fibers.
- A designated competent person conducts an initial exposure assessment immediately before or at the initiation of an operation to document expected exposures, and that the assessment is completed in time to comply with requirements triggered by exposure data or the lack of a "negative exposure assessment."
- The company performs periodic monitoring and additional monitoring when required.
- When required, we implement a medical surveillance program for all employees when for a combined total of 30 or more days per year engage in Class I, II, or III work or are exposed at or above the PEL, or when employees are required to wear negative-pressure respirators.
- **The Company** maintains objective data, monitoring, medical surveillance, training, and building owner notification records when required and for the time periods indicated in the asbestos rule.
- Our asbestos competent person is qualified, authorized, and has the proper training to ensure worker safety and health as required by 29 CFR1926.20.
- Our respirator program is in place and in accordance with 29 CFR 1910.134(b) through (d) (except (d)(1)(iii)), and (f) through (m).
- Our Class I, II, and III asbestos work, and all other operations where airborne concentrations of asbestos exceed or there is a possibility they may exceed a PEL, are conducted within regulated areas. Our regulated areas comply with 29 1926.1101(e)(2) - (5).
- We understand that the communication of asbestos hazards is vital to prevent further overexposure and that we have specific duties under the asbestos rule to communicate those hazards through written notifications, signs, labels and employee information and training.
- Our specific methods of compliance with the PEL and STEL are based on the regulation. We understand there are compliance methods that are required for most jobs, required for all jobs when exposure exceeds the PEL, and methods that are prohibited on all jobs. We also understand that most, but not all, asbestos jobs fall into one of the Class I - IV categories. For example, the installation of new asbestos-containing products does not carry a class designation.

On multi-employer worksites, **PNT Consulting LLC** will: (1) inform other employers on the site of the nature of our work, (2) relay information of the existence of regulated areas and take correct measures to ensure employees of other employers are not exposed to asbestos.
This program applies to all construction work where one of our employees may be occupationally exposed to asbestos.

This written safety plan is designed to cover all of our job sites which may result in occupational

exposure to asbestos or asbestos containing building materials.

Exposure assessment and monitoring (.1101(f))

Initial Exposure Assessment

PNT Consulting LLC understands we are required to evaluate all asbestos operations (some exceptions exist only when we are involved in Class IV work) for the purpose of predicting whether exposure levels during the planned asbestos work can be expected to exceed the PELs, and thus whether additional monitoring, and other precautions are required.
Our competent person will ensure the proper conduct all initial exposure assessments.

The initial exposure assessment requirement will be satisfied by one of two methods:

- A negative exposure assessment demonstrating that the activity involving the asbestos material is unlikely under all foreseeable conditions to result in concentration above the PEL (1926.1101(f)(2)(iii)).

- Initial exposure monitoring determined from breathing zone air samples that are representative of the 8-hour TWA and 30-minute short-term exposures of each employee conducted pursuant to .1101(f)(1)(iii).

Periodic Monitoring

We comply with OSHA requirements for periodic monitoring. For Class I, II, or III asbestos operation in progress, we monitor representative employees working in a regulated area daily unless a negative exposure assessment for the entire operation already exists and nothing has changed.

Termination of Monitoring

If periodic monitoring reveals that our employee exposure, as indicated by statistically reliable measurements, are below the permissible exposure (PEL) and short-term exposure limit (STEL), we may discontinue monitoring of our employees. represented by the data.

If periodic monitoring reveals that our employee exposure, as indicated by statistically reliable measurements, are at or above the permissible exposure (PEL) and short-term exposure limit (STEL), we will continue monitoring our employees.

Employee Notification

We notify employees in writing, personally or by posting at a central location, the monitoring results as soon as possible following receipt of those results.

Medical Surveillance

institutes a medical surveillance program for all employees who for a combined total of 30 or more days per year are engaged in Class I, II, and III work or are exposed at or above the PEL.

When our employees are required by the standard to wear a negative pressure respirator, we

make sure those employees are physically able to perform the work and use the equipment as determined by a physician.

We ensure that all medical examinations and procedures are performed by or under the supervision of a licensed physician and are provided at no cost to the employee and at a reasonable time and place.

Our medical surveillance program includes the following requirements:

1. Medical examinations and consultations

We make available medical examinations and consultations to each employee as required by and in accordance with 29 CFR 1926.1101(m):

- Prior to assignment of the employee to an area where negative-pressure respirators are worn.
- When our employee is assigned to an area where exposure to asbestos may be at or above the PEL for 30 or more days per year, or engage in Class I, II, or III work for a combined total of 30 or more days per year, a medical examination must be given within 10 working days following the thirtieth day of exposure; and at least annually thereafter.

2. Information provided to the physician

- We provide the following information to the examining physician:
- A copy of the asbestos standard including Appendices D, E, and I.
- A description of affected employees' duties as they relate to their exposure.
- The employees' representative exposure level or anticipated exposure level.
- A description of any personal protective and respiratory equipment used or to be used.
- Information from previous medical examinations that is not otherwise available to the examining physician.

3. Physician's written opinion

The written opinion we receive from the examining physician containing the results of the medical examination includes:

- Whether our employee has any detected medical conditions that would place him or her at an increased risk of material health impairment from exposure to asbestos.
- Recommended limitations on the employee or on the use of personal protective equipment such as respirators.
- A statement that the employee has been informed by the physician of the results of the medical examination and of any medical conditions that may result from asbestos exposure.
- A statement that the employee has been informed by the physician of the increased risk of lung cancer attributable to the combined effect of smoking and asbestos exposure.
- We instruct the physician not to reveal in the written opinion given to the employer specific findings or diagnoses unrelated to occupational exposure to asbestos.
- We provide a copy of the physician's written opinion to the affected employee within 30 days from its receipt.

Record keeping

Objective Data

Where the company relies on objective data that demonstrates that products made from or containing asbestos or the activity involving such products or material are not capable of releasing fibers of asbestos in concentrations at or above the permissible exposure limit and/or excursion limit under the expected conditions of processing, use, or handling to satisfy the requirements of 29 CFR 1926.1101(f), we establish and maintain an accurate record of objective data reasonably relied upon in support of the exemption. The record includes at least the following information:

- The product qualifying for exemption.
- The source of the objective data.
- The testing protocol, results of testing, and/or analysis of the material for the release of asbestos.
- A description of the operation exempted and how the data support the exemption.
- Other data relevant to the operations, materials, processing, or employee exposures covered by the exemption.

We maintain this record for the duration of the employer's reliance upon such objective data.

Exposure Measurements

We keep an accurate record of all measurements taken to monitor employee exposure to asbestos as prescribed at 29 CFR 1926.1101(f).

Note: We may utilize the services of competent organizations such as industry trade associations and employee associations to maintain the records required by this section.

This record includes at least the following information:

- The date of measurement.
- The operation involving exposure to asbestos that is being monitored.
- Sampling and analytical methods used and evidence of their accuracy.
- Number, duration, and results of samples taken.
- Type of protective devices worn, if any.
- Name, social security number, and exposure of the employees whose exposures are represented.

We will maintain this record for at least thirty (30) years, in accordance with 29 CFR 1910.1020.

Medical Surveillance

We have established and do maintain an accurate record for each employee subject to medical surveillance under 29 CFR 1926.1101(m), in accordance with 29 CFR 1910.1020.

- The record includes at least the following information:
- The name and social security number of the employee.
- A copy of the employee's medical examination results, including the medical history, questionnaire responses, results of any tests, and physician's recommendations.
- Physician's written opinions.
- Any employee medical complaints related to exposure to asbestos.
- A copy of the information provided to the physician as required by paragraph (m) of this

section.

We make sure that this record is maintained for the duration of employment plus thirty (30) years, in accordance with 29 CFR 1910.1020.

Training Records

We keep all employee training records for one (1) year beyond the last date of employment by this company.

Data to Rebut PACM

Where the building owner and we have relied on data to demonstrate that PACM is not asbestos containing, we maintain such data for as long as they are relied upon to rebut the presumption.

Records of Required Notifications

Where the building owner has communicated and received information concerning the identification, location and quantity of ACM and PACM, we ensure that written records of such notifications and their content are maintained by the building owner for the duration of ownership and then transferred to successive owners of such buildings/facilities.

Availability

We will, upon written request, make all records required to be maintained by this section available to the Assistant Secretary and the Director for examination and copying.

We will, upon request, make any exposure records required by paragraphs (f) and (n) of the asbestos rule available for examination and copying to affected employees, former employees, designated representatives, and the Assistant Secretary, in accordance with 29 CFR 1910.1020(a) through (e) and (g) through (i).

We will, upon request, make employee medical records required by paragraphs (m) and (n) of this section available for examination and copying to the subject employee, anyone having the specific written consent of the subject employee, and the Assistant Secretary, in accordance with 29 CFR 1910.1020.

Transfer of Records

We comply with the requirements concerning transfer of records set forth in 29 CFR 1910.1020 (h). If we ever cease to do business and there is no successor employer to receive and retain the records for the prescribed period, we shall notify the Director at least 90 days prior to disposal and, upon request, transmit them to the Director.

Competent Person Requirements

At the construction worksites covered by this plan **PNT Consulting LLC** has designated our

Program Coordinator, or other AHERA certified/licensed supervisors as our competent person(s), having the qualifications and authorities for ensuring worker safety and health required by Subpart C, General Safety and Health Provisions for Construction (29 CFR 1926.20 through 1926.32).

Required Inspections by the Competent Person

Section 1926.20(b)(2) requires frequent and regular inspections of job sites, materials, and equipment to be made by competent persons. We recognize and follow this requirement. We log these inspections and maintain the logs as records.

Additional Inspections

In addition, our competent person makes frequent and regular inspections of the job sites to perform or supervise the duties listed below.

For Class I jobs, on-site inspections are made at least once during each work shift, and at any time an employee requests one.

For Class II, III, and IV jobs, on-site inspections are made at intervals sufficient to assess whether conditions have changed, and at any reasonable time an employee requests.

On all worksites where **PNT Consulting LLC** employees are engaged in Class I or II asbestos work, our competent person will perform or supervise the following duties, as applicable:

- Set up the regulated area, enclosure, or other containment.
- Ensure (by on-site inspection) the integrity of the enclosure or containment.
- Set up procedures to control entry to and exit from the enclosure and/or area.
- Supervise all employee exposure monitoring required by this section and ensure that it is conducted as required by paragraph (f) of this section.
- Ensure that employees working within the enclosure and/or using glove bags wear respirators and protective clothing as required by paragraphs (h) and (i) of this section.
- Ensure through on-site supervision, that employees set up, use, and remove engineering controls, use work practices and personal protective equipment in compliance with all requirements.
- Ensure that employees use the hygiene facilities and observe the decontamination procedures specified in 29 CFR 1926.1101(j).
- Ensure that through on-site inspection, engineering controls are functioning properly, and employees are using proper work practices.
- Ensure that notification requirements in paragraph 29 CFR 1926.1101(k) of this section are met.

Competent Person Training

competent person has received the following training for Classes I and II asbestos work:

1. All aspects of asbestos removal and handling, including: abatement, installation, removal, and handling.

2. The contents of the asbestos rule.

3. The identification of asbestos.

4. Removal procedures where appropriate.

5. Other practices for reducing the hazard.

Our competent person was trained in a comprehensive course for supervisors that meets the criteria of EPA's Model Accredited Plan (40 CFR part 763, subpart E, Appendix C) such as a course conducted by an EPA-approved or state-approved training provider, certified by EPA or a state or a course equivalent in stringency, content, and length.

Our competent person has received the following training for Classes III and IV asbestos work:

1. Aspects of asbestos handling appropriate for the nature of the work, to include procedures for setting up glove bags and mini- enclosures.

2. Practices for reducing asbestos exposures.

3. Use of wet methods.

4. The contents of this standard.

5. The identification of asbestos.

This training includes successful completion of a course that is consistent with EPA requirements for training of local education agency maintenance and custodial staff as set forth at 40 CFR 763.92(a)(2), or its equivalent in stringency, content, and length. Competent persons for Class III and IV work, may also be trained per the requirements of 29 CFR 1926.1101(o)(4)(i).

Regulated areas

When there are Class I, II or III asbestos work being conducted at the site, it is therefore done within regulated areas.

Other operations, where airborne concentrations of asbestos exceed or there is a reasonable possibility, they may exceed a PEL, are conducted within a regulated area. Our regulated areas comply with 29 CFR 1926.1101(e)(2), (3), (4) and (5).

Demarcation

The regulated area is demarcated in a manner that minimizes the number of persons within the area and protects persons outside the area from exposure to airborne asbestos. When critical barriers or negative pressure enclosures are used, they may demarcate the regulated area. Warning signs are posted in accordance with the requirements of 29 CFR 1926.1101(k)(7).

Access

Access to regulated areas is limited to authorized persons and to persons authorized by the Osh Act or federal regulations.

Respirators

All persons entering a regulated area where employees are required to wear respirators are supplied with a respirator selected in accordance with 29 CFR 1926.1101(h)(3).

Prohibited Activities

makes sure that our employees do not eat, drink, smoke, chew tobacco or gum, or apply cosmetics in a regulated area.

Competent Persons

competent person will supervise all asbestos work performed within regulated areas.

Communication of Hazards

understands the importance of communicating asbestos hazard information at this job site. Our plan to communicate those hazards follows the requirements of 29 CFR 1926.1101(k) and contains information and procedures for the following elements:

- Duties of building and facility owners.
- Duties of employers whose employees perform work subject to this standard in or adjacent to areas containing ACM and PACM.
- Criteria to rebut the designation of installed material as PACM. · Warning signs.
- Labels.
- Employee information and training.
- Access to training materials.

Methods of Compliance

Our methods of compliance set operation-specific and exposure-triggered work practices for conducting asbestos work. Each job is specific, and the methods of compliance will include the following required and optional procedures.

The following basic engineering controls and work practices are a part of all asbestos operations at this jobsite regardless of the levels of exposure (except as provided in 29 CFR 1926.1101(g)(8)(ii)):

- Vacuum cleaners equipped with HEPA filters to collect all debris and dust containing ACM or PACM.
- Wet methods, or wetting agents, to control employee exposures during asbestos handling, mixing, removal, cutting, application, and cleanup, except where we demonstrate that the use of wet methods is infeasible due to for example, the creation of electrical hazards, equipment malfunction, and, in roofing.
- Prompt clean-up and disposal of wastes and debris contaminated with asbestos in leak-tight containers.
- In addition to the requirements noted above for all asbestos operations we use the following control methods to achieve compliance with the TWA permissible exposure limit and excursion (STEL) limit.
- Local exhaust ventilation equipped with HEPA filter dust collection systems.
- Enclosure or isolation of processes producing asbestos dust.
- Ventilation of the regulated area to move contaminated air away from the breathing zone of employees and toward a filtration or collection device equipped with a HEPA filter.
- Use of other work practices and engineering controls that the Assistant Secretary can show

to be feasible.

- Wherever the feasible engineering and work practice controls described above are not sufficient to reduce employee exposure to or below the permissible exposure limit and/or excursion limit we will use them to reduce employee exposure to the lowest levels attainable by these controls and shall supplement them by the use of respiratory protection.

Prohibitions

We never use the following work practices and engineering controls for work related to asbestos or for work which disturbs ACM or PACM, regardless of measured levels of asbestos exposure or the results of initial exposure assessments:

- High-speed abrasive disc saws that are not equipped with point of cut ventilator or enclosures with HEPA filtered exhaust air.
- Compressed air to remove asbestos, or materials containing asbestos, unless the compressed air is used in conjunction with an enclosed ventilation system designed to capture the dust cloud created by the compressed air.
- Dry sweeping, shoveling, or other dry clean-up of dust and debris containing ACM and PACM.
- Employee rotation as a means of reducing employee exposure to asbestos.

Class I Requirements

In addition to the required provisions of paragraphs (g)(1) and (2) of 29 CFR 1926.1101, we implement all other required engineering controls and work practices as required by 29 CFR 1926.1101(g)(4)-Class I Requirements, (5)-Specific control methods for Class I work, and (6)-Alternative control methods for Class I work.

All Class I work, including the installation and operation of the control system is supervised by our competent person.

Work Practices and Engineering Controls for Class II work

All Class II work, including the installation and operation of the control system is supervised by our competent person. For all indoor Class II jobs, where we have not produced a negative exposure assessment, or where during the job changed conditions indicate there may be exposure above the PEL, or where we do not remove the ACM in a substantially intact state, we will use one of the methods in 29 CFR 1926.1101(g)(7)(ii)(A) - (C), to ensure that airborne asbestos does not migrate from the regulated area. We perform all Class II asbestos work using the work practices and requirements in 29 CFR 1926.1101(g)(1)(i) - (iii).

Additional Controls for Class II Work

When performing the following types of Class II asbestos work, **the company** complies with the work practices and controls designated for each type. We do understand that where more than one control method may be used, we may choose one or a combination of designated control methods. Class II work also may be performed using a method allowed for Class I work, except that glove bags and glove boxes are allowed if they fully enclose the Class II material to be removed. We ensure that the work practices as specified below are followed:

- For removing vinyl and asphalt flooring materials containing ACM or for which in buildings constructed no later than 1980 we have not verified the absence of ACM in accordance with 1926.1101(g)(8)(i), employees comply with the work practices in 1926.1101(g)(8)(i)(A)-(I), and that employees are trained in these practices in accordance with 1926.1101(k)(9).
- For removing roofing material which contains ACM under 1926.1101(g)(8)(ii)(A)-(H).
- When removing cementitious asbestos-containing siding and shingles or transite panels containing ACM on building exteriors (other than roofs, where 1926.1101(g)(8)(ii) applies) under 1926.1101(g)(8)(iii)(A)-(D).
- When removing gaskets containing ACM under 1926.1101(g)(8)(iv)(A)-(D).
- Any other Class II removal of asbestos containing material for which specific controls have not been listed in 29 CFR 1926.1101(g)(8)(iv)(A)-(D) under 1926.1101(g)(8)(v)(A)-(D).

Alternative Work Practices and Controls

Instead of the Class II work practices and controls listed in 1926.1101(g)(8)(i)-(v), we may use different or modified engineering and work practice controls. In those cases we will follow the provisions found in 1926.1101(g)(8)(vi)(A) & (B).

Work Practices and Engineering Controls for Class III Asbestos Work

We conduct Class III asbestos work using engineering and work practice controls which minimize the exposure to our employees performing the work and to bystander employees. This written plan reflects the procedures in 1926.1101(g)(9)(i)-(v) including:

- Wet methods.
- When feasible, local exhaust ventilation.
- Where the disturbance involves drilling, cutting, abrading, sanding, chipping, breaking, or sawing of thermal system insulation or surfacing material we will use impermeable drop cloths, and will isolate the operation using mini-enclosures or glove bag systems in compliance with 29 CFR 1926.1101(g)(5) or another isolation method.
- Where we do not have a "negative exposure assessment," or where monitoring results show the PEL has been exceeded, we will contain the area using impermeable drop cloths and plastic barriers or their equivalent or shall isolate the operation using a control system in compliance with 29 CFR 1926.1101(g)(5).
- Our employees performing Class III jobs, involving the disturbance of thermal system insulation or surfacing material, or where we do not produce a "negative exposure assessment" or where monitoring results show a PEL has been exceeded, wear respirators selected, used and fitted in accordance with 29 CFR 1926.1101(h) and our Respiratory Protection Program

Class IV Asbestos Work

Employees trained in our asbestos awareness training program (29 CFR 1926.1101(k)(9)) will be allowed to work Class IV asbestos jobs. In addition, all Class IV jobs will conform to the requirements of 29 CFR 1926.1101(g)(1), mandating wet methods, HEPA vacuums, and prompt cleanup of debris containing ACM or PACM. Our employees cleaning up debris and waste in a regulated area where respirators are required will wear respirators selected, used and fitted in accordance with 29 CFR 1926.1101(h) and our Respiratory Protection Program. When we have employees who clean up waste and debris in, or we are in control of areas where friable thermal

system insulation or surfacing material is accessible, we will assume that such waste and debris contains asbestos.

Alternative methods of compliance for installation, removal, repair, and maintenance of certain roofing materials

When installing, removing, repairing, or maintaining intact pipeline asphaltic wrap, or roof cements, mastics, coatings, or flashings which contain asbestos fibers encapsulated or coated by bituminous or resinous compounds the following steps are taken:

- Before work begins and as needed during the job, our competent person who is capable of identifying asbestos hazards in the workplace and selecting the appropriate control strategy for asbestos exposure, and who has the authority to take prompt corrective measures to eliminate such hazards, conducts an inspection of the worksite and determine that the roofing material is intact and will likely remain intact.
- All employees performing work covered by this alternative method of compliance are trained in a training program that meets the requirements of 29 CFR 1926.1101(k)(9).
- The material is not sanded, abraded, or ground. Manual methods which do not render the material non-intact are used.
- Material that has been removed from a roof is not dropped or thrown to the ground. Unless the material is carried or passed to the ground by hand, it will be lowered to the ground via covered, dust-tight chute, crane or hoist. All such material will be removed from the roof as soon as is practicable, but in any event no later than the end of the work shift.
- Where roofing products labeled according to the labeling instructions in 29 CFR 1926.1101(k)(8) as containing asbestos are installed on non-residential roofs during operations covered in 29 CFR 1926.1101(g)(11), we will notify the building owner of the presence and location of such materials no later than the end of the job.
- All removal or disturbance of pipeline asphaltic wrap is performed using wet methods.

If during the course of the job the material does not remain intact, the provisions of 29 CFR 1926.1101(g)(8) apply instead of 29 CFR 1926.1101(g)(11).

Respiratory Protection

We will provides respirators and ensure they are used in the following circumstances:

- During all Class I asbestos jobs.
- During all Class II work when the ACM is not removed in a substantially intact state.
- During all Class II and III work not performed using wet methods, except for removal of ACM from sloped roofs when a negative exposure assessment has been made and the ACM is removed in an intact state.
- During all Class II and III asbestos jobs where we do not conduct a negative-exposure assessment.
- During all Class III jobs where TSI or surfacing ACM or PACM is being disturbed.
- During all Class IV work performed within regulated areas where employees performing other work are required to wear respirators.
- During all work covered by this section where employees are exposed above the TWA or excursion limit.
- In emergencies.

Respirator Selection

Where respirators are used we select and provide, at no cost to out employees, the appropriate respirator. We ensure that the employee uses the respirator provided. We provide a tight fitting powered, air-purifying respirator in lieu of any negative-pressure respirator specified in Table 1 whenever: (a) an employee chooses to use this type of respirator, and (b) this respirator will provide adequate protection to the employee. In addition, we provide a half-mask air purifying respirator, other than a disposable respirator, equipped with high efficiency filters whenever our employees perform:

- Class II and III asbestos jobs where we do not conduct a negative exposure assessment.
- Class III jobs where TSI or surfacing ACM or PACM is being disturbed.
- Selection criteria when employees are in regulated area where Class I work is being performed, a negative exposure assessment of the area has not been produced, and the exposure assessment of the area indicates the exposure level will not exceed 1 f/cc as an 8-hour time weighted average, we provide the employees with one of the following respirators:

(A) A tight-fitting powered air-purifying respirator equipped with high efficiency filters;

(B) A full face piece supplied-air respirator operated in the pressure demand mode equipped with HEPA egress cartridges; or

(C) A full face piece supplied-air respirator operated in the pressure demand mode equipped with an auxiliary positive pressure self-contained breathing apparatus. A full face piece supplied-air respirator operated in the pressure-demand mode equipped with an auxiliary positive pressure self-contained breathing apparatus must be provided under such conditions when the exposure assessment indicates exposure levels above 1 f/cc as an 8-hour time weighted average.

Respirator Program

When we are required to use respiratory protection, the program we institute is in accordance with 29 CFR 1910.134(b) through (d) (except (d)(1)(iii)), and (f) through (m).

We have developed a respiratory protection program to satisfy the requirements of this asbestos-related project.

Note: See respiratory protection requirements under 29 CFR 1910.134(b) through (d) (except (d)(1)(iii)), and (f) through (m). Other components of our respirator program include prohibiting the assignment of asbestos work that requires respirator use if, based on their most recent medical examination, the examining physician determines that the employee will be unable to function normally while using a respirator, or that the safety or health of the employee or other employees will be impaired by the employee's respirator use.

Those employees will be assigned to another job or given the opportunity to transfer to a different position, the duties of which they are able to perform with the same employer, in the same geographical area, and with the same seniority, status, and rate of pay and other job benefits they had just prior to such transfer, if such a different position is available.

Respirator Fit Testing

makes sure that the respirator issued to each employee exhibits the least possible face piece

leakage and that the respirator is fitted properly. We perform either quantitative or qualitative face fit tests:

- Before any employees are required to use any respirator with a negative or positive pressure tight-fitting face piece;
- Whenever a different respirator face piece (size, style, model, or make) is used;
- At least annually;
- Whenever the employee reports, or our company, the physician or other licensed health care professional (PLHCP), supervisor, or Program Administrator makes visual observations of, changes in the employee's physical condition that could affect respirator fit. Such conditions include, but are not limited to, facial scarring, dental changes, cosmetic surgery, or an obvious change in body weight; and
- When the employee, subsequently after passing a qualitative or quantitative fit test, notifies the company, Program Administrator, supervisor, or PLHCP that the fit of the respirator is unacceptable. That employee will be retested with a different respirator face piece.

See the Respiratory Protection Program for Details.

Protective Clothing

provides and requires the use of protective clothing, such as coveralls or similar whole-body clothing, head coverings, gloves, and foot coverings for:

- Any employee exposed to airborne concentrations of asbestos that exceed the TWA and/or STEL.
- This site when a required negative exposure assessment is not produced.
- Any employee performing Class I operations which involve the removal of over 25 linear or 10 square feet of TSI or surfacing ACM and PACM.

Laundering

ensures that laundering of contaminated clothing is done so as to prevent the release of airborne asbestos in excess of the TWA or STEL. When we give contaminated clothing to another person for laundering we inform that person of the requirement in 29 CFR 1926.1101(i)(2)(i) to effectively prevent the release of airborne asbestos in excess of the TWA or STEL.

Contaminated Clothing

Contaminated clothing is transported in sealed impermeable bags, or other closed, impermeable containers, and be labeled in accordance with 29 CFR 1926.1101(k).

Inspection of Protective Clothing

Our competent person examines work suits worn by our employees at least once per work shift for rips or tears that may occur during performance of work. When rips or tears are detected while an employee is working, they will be immediately mended, or the work suit shall be immediately replaced.

Hygiene Facilities and Practices for Employees

Our hygiene facilities and practices requirements for this job are for * Employees performing Class

I asbestos jobs involving over 25 linear or 10 square feet of TSI or surfacing ACM and PACM and follow the OSHA requirements in §1926.1101(j)(1).

Smoking in Work Areas

We ensure that employees do not smoke in work areas where they are occupationally exposed to asbestos because of activities in that work area.

Housekeeping

Vacuuming

When selects vacuuming methods, we always use HEPA filtered vacuuming equipment. The equipment is used and emptied in a manner that minimizes the reentry of asbestos into the worksite.

Waste Disposal

Asbestos waste, scrap, debris, bags, containers, equipment, and contaminated clothing will be collected and disposed of in sealed, labeled, impermeable bags or other closed, labeled, impermeable containers except in roofing operations. Our roofing operation waste disposal procedures follow the requirements of 29 CFR 1926.1101(g)(8)(ii).

Care of Asbestos-Containing Flooring Material

All vinyl and asphalt flooring material will be cared for in accordance with 29 CFR 1926.1101(g)(8)(I) unless the building/facility owner demonstrates, pursuant to 29 CFR 1926.1101(g)(8)(i)(I) the flooring does not contain asbestos.

Waste and debris and accompanying dust in an area containing accessible thermal system insulation or surfacing ACM/PACM or visibly deteriorated ACM:

- Is not dusted or swept dry, or vacuumed without using a HEPA filter.
- Is promptly cleaned up and disposed of in leak tight containers.

Annual Program Evaluation

This program has been evaluated on the below noted date. All facets of the program have been included in the evaluation. The program meets or exceeds the purpose, policies, and procedures as outlined in this written program.

Paul B Harvey _____ 6-14-2024 _____
Program Coordinator Date:

_____ _____
Program Coordinator Date:

_____ _____
Program Coordinator Date:

_____ _____
_ Program Coordinator Date:

_____ _____
_ Program Coordinator Date:

_____ _____
_ Program Coordinator Date:

_____ _____
_ Program Coordinator Date:

_____ _____
_ Program Coordinator Date:

_____ _____
_ Program Coordinator

Assured Grounding Program

PURPOSE:

The purpose of this policy is to specify procedures and guidelines to eliminate all injuries resulting from possible malfunctions, improper grounding and/or defective electrical tools.

GROUND FAULT PROTECTION

The company will use ground fault circuit interrupters or assured equipment grounding conductor program to protect employees on the job site. These requirements are in addition to any other requirements for equipment grounding conductors.

Ground-fault circuit interrupters (GFCI) - All 120 volt, single phase, 15 and 20 ampere Receptacle outlets on the job site, which are not part of the permanent wiring of the building or structure and which are in use by employees, shall have approved ground fault circuit interrupters for personnel protection. Receptacles on a two wire, single phase portable or vehicle mounted generator rated not more than 5kw, where the circuit conductors of the generator frame and all other grounded surfaces, need not be protected with ground fault circuit interrupters.

Assured equipment grounding conductor program - The company has established the following assured equipment grounding conductor program on the job site covering all cord sets, receptacles which are not part of the building or structure, and equipment connected by cord and plug which are available for use or used by employees. This program will comply with the following minimum requirements:

(A) A written description of the program, including the specific procedures adopted by the employer, shall be available at the job site for inspection and copying by and any affected employee.

(B) The manager and/or designated employee have been designate to implement the program as defined by OSHA 1926.304(f).

(C) Each cord set, attachment cap, plug and receptacle of cord sets, and any equipment connected by cord and plug, except cord sets and receptacles which are fixed and not exposed to damage, shall be visually inspected before each day's use for external defects, such as deformed or missing pins or insulation damage, and for indications of possible internal damage.

Equipment found damaged or defective shall not be used until repaired. Damaged or defective items shall be tagged "DO NOT USE" and removed from service until repaired and tested.

(D) The following tests shall be performed on all cord sets, receptacles which are not part of the permanent wiring of the building or structure, and cord and plug connected required to be grounded:

(1) All equipment grounding conductors shall be tested for continuity and shall be electrically continuous.

(2) Each receptacle and attachment cap or plug shall be tested for correct attachment of the equipment grounding conductor. The equipment grounding conductor shall be connected to its proper terminal.

(E) All required test shall be performed:

(1) Before first use;

(2) Before equipment is returned to service following any repairs;

(3) Before equipment is used after any incident which can be reasonably suspected to cause damage (for example, when the cord set has been run over; and

(4) At intervals not to exceed 3 months, except that cord sets and receptacles which are fixed and not exposed to damage shall be tested at intervals not exceeding 6 months.

(F) The company will not make available or permit the use by employees on any equipment which has not met the above requirements.

(G) Tests performed as required will be recorded. This test record shall identify each receptacle, cord set, and cord and plug connected equipment that passed the test and shall indicate the late date it was tested or the interval for which it was tested. The equipment will be identified with a nonconducting tag or other means of identification. This record shall be kept by means of logs, color coding, (example – colored plastic tapewriter tape) or other effective means and shall be maintained until replace by a more current record. The record shall be made available on the job site for inspection by any affected employee.

(H) The company will use a different color plastic tape for each quarterly inspection. Red 1st Quarter, Blue 2nd Quarter, Green 3rd Quarter, and Yellow 4th Quarter. A plastic tape writer will be used to identify each cord set by a number (SP01, 02, 03 etc.). A written record will be maintained on all cords sets and news sets as they are added. A Volt/OHM meter will be used to test continuity of each set.

Behavior Based Safety BBS

Purpose

Behavior Based Safety (BBS) initiative is an education and observation process used to improve safety and reduce risk in the workplace. This process uses a proactive approach and is intended to communicate to employees the elements and the procedures of Behavior Based Safety that will assist in reducing at risk behaviors which in turn reduces injuries in our workplaces.

Scope

The BBS applies to all **PNT Consulting LLC** staff. Employees are permitted to participate in BBS initiatives already in place at customer locations if required by the customer. Employees are requested to participate in Behavior Based Safety process and follow the process guidelines.

Requirements

Safety awareness principles are the foundation of the Behavior Based Safety process. The key concepts teach employees to recognize when they may be in one of the following states…

- Rushing (working too fast)
- Frustration
- Fatigue
- Complacency
- Being in the “Line of Fire”

A Job Safety Analysis (JSA) will be conducted prior to each job. The purpose of which is to eliminate or control all hazards that may be encountered to complete the job. This process is included in the Behavior Based Safety process to establish the correct habits and work procedures in order to reduce at-risk behaviors.

The observation process is designed to raise safety awareness and provide a feedback mechanism for management to make changes in design, process or procedure in order to reduce at-risk behaviors. The key to this process is raising awareness of behavior through observation and feedback. This process has three key elements and they are..

- Conducting observations of employees work behavior
- Collection of data and performing Trend Analysis
- Action Plan follow up and feedback

Responsibilities

Behavior Based Safety BBS

Managers and Supervisors will coach observers and develop action plans to ensure continuous improvement and ensure all employees are trained on the Behavior Based Safety Elements.

An Employee Observer responsibility will include:

- Learn the BBS process and the benefits of reducing at risk behaviors
- Promote the BBS Process
- Assist workers by offering suggestions to safely perform a task or help them with a task if necessary
- Give constructive feedback after observations
- Record a comment for every “at risk” to include what and why. Make quality observations for quality comments
- Offer and work toward solutions of problems found

The Observed Employee will

- Be open and cooperative
- Be familiar with the BBS process
- Participate in problem solving meetings

Training

Training on the observation process will include how to conduct the observation, how to complete the observation form, what do the behaviors mean, feedback training and role play (mentoring and coaching) and employees should be aware they may be observed at any time.

Training objectives will include

- How to conduct the observation
- How to complete the observation form
- What behaviors to look for
- Employees should be aware they may be observed at any time

Assured Grounding Program

BEHAVIOR BASED SAFETY OBSERVATION FORM

Your concerns for safety and suggestions on how to improve our safety program are important. Use this form to submit either safety improvement input and/or a BBS Safety Observation. Your name is optional and the name of the person being observed is not to be used. This information will be used to continually improve our safety system and conditions.

IMPROVEMENT INPUT				
☐ BBS Observation	☐ Unsafe Act	☐ Unsafe Condition	☐ Recognition	☐ Environment
Employee/Observer Input:				
Employee's Action Taken or Recommendation:				
Supervisor or Management Action Taken:				

Assured Grounding Program

SAFETY OBSERVATION CRITICAL FACTORS (S=SAFE, C=CONCERN)											
PPE / PROCEDURES / METHODS			**BODY POSITION / MECHANICS**			**SLIPS / TRIPS**			**EQUIPMENT / WORK ENVIRONMENT**		
S	C	EYE AND HEAD	S	C	PROPER POSITION	S	C	PROPER FOOTWEAR	S	C	MSDS, IF NEEDED
S	C	HAND AND BODY	S	C	ASK FOR HELP	S	C	AWARE OF HAZARDS	S	C	LOCKOUT
S	C	FOOTWEAR	S	C	USE DOLLY	S	C	PROMPT CLEAN UP	S	C	TOOLS ARE SAFE
S	C	TRAINED ON TASK	S	C	SMALLER LOADS	S	C	TRIPPING HAZARDS	S	C	ADJACENT WORK
S	C	WORK PERMIT / JSA	S	C	DON'T TWIST BODY	S	C	NOT RUSHING	S	C	SIGNAGE, IF NEEDED
S	C	ALL TRAINED IN BBS	S	C	GET CLOSE TO ITEM	S	C	STEP CONDITIONS	S	C	SPILL CONTROL
Observer's Feedback Given to Other Employee:											
Location:			Observer's Name:						Date:		

PROMPTLY GIVE THIS FORM TO YOUR SUPERVISOR W HO W ILL REVIEW IT AND W HO MUST THEN FORW ARD IT TO THE SAFETY MANAGER FOR ACTION

Benzene Awareness Program

Purpose

This safety guideline is intended to provide suitable awareness information to all company employees regarding the potential toxic effects of Benzene so that adequate measures can be taken to limit exposures through controls in the workplace.

GENERAL

Of all the hydrocarbons, Benzene poses the most serious long-term threat. Exposure over time, to even low levels of Benzene can cause leukemia, blood changes and aplastic anemia.

CHARACTERISTICS

Benzene is a colorless to light-yellow liquid with a pleasant sweet odor.

- Formula (C6H6)
- CAS No.: 71-43-2

Benzene is a flammable liquid that can accumulate static electricity. Benzene vapors are heavier that air and may travel to a source of ignition and flash back. The vapors are readily dispersed by wind movement and/or air currents. Liquid benzene tends to float on water and may travel to a source of ignition and spread fire. Benzene is highly reactive with no oxidizing materials.

USES:

Benzene is a component of gasoline, both in the manufacturing process and found naturally in crude oil; Benzene is also used as a feed stock for chemical manufacturing.

HEALTH EFFECTS:

WARNING
Benzene is a cancer-causing agent in humans. All contact should be reduced to the lowest possible level. The above exposure limits are for air levels only. Skin contact may also cause overexposure.

Benzene is one of the most hazardous of all petroleum products because of its adverse health hazards and high flammability.

The following adverse health affects are important to remember where there may be a potential exposure to Benzene:

a) **Acute:** At high concentrations (1000 PPM) Benzene has an acute effect on the central nervous systems causing headaches, dizziness, drowsiness, unconsciousness, and possible death.

   Acute exposure can also cause breathlessness, irritability, and giddiness.

b) **Chronic:** Benzene has the chronic exposure effect on bone marrow (aplastic anemia leukemia).

Chronic exposure can also cause convulsions, liver damage, heart damage, blood diseases (aplastic anemia), and cancer (leukemia). These symptoms can take months or years to surface and can develop without physical or visible indications.

c) Repeated skin contact leads to irritant contact dermatitis (rash); as with any petroleum solvent (which Benzene is also classified as), it will leach the natural oils out of the skin. Direct contact with the skin can cause erythema and/or blistering.

d) Benzene is irritating to eyes and mucous membranes.

e) Flammable/dangerous fire risk: benzene has a very low flash point making it dangerous to have any open flame, spark or source of ignition when vapors are present.

f) Explosive limits in air 1.5 to 8% by volume: benzene is highly flammable at low levels of vapor quantity in air.

PERSONAL PROTECTIVE MEASURES

Company employees are not permitted to work in areas where there may be a potential for Benzene exposure. It is the responsibility of the Contracting Company's Project Manager and the on-site supervisor/foreman to see that any jobsite that may expose employees to Benzene is not manned with personnel until it is proven that it is safe to work within the acceptable OSHA limits without personal protective equipment.

SPECIAL REQUIREMENTS

If it is necessary to perform any work where the exposure to Benzene is above the OSHA acceptable limits, then the company must implement a comprehensive OSHA mandated special safety policy and procedure that includes special elements of exposure monitoring, formal medical program, special personal protective equipment, and much more.

TRAINING

All employees will be provided awareness training in this program in order to be familiar with the potential hazards and proper safe work procedures to follow if exposed to this health hazard.

Benzene Awareness

Purpose

This safety guideline is intended to provide suitable information to all **PNT Consulting LLC** employees regarding the potential toxic effects of Benzene so that adequate measures can be taken to limit exposures through controls in the workplace.

GENERAL

Of all the hydrocarbons, Benzene poses the most serious long-term threat. Exposure over time, to even low levels of Benzene can cause leukemia, blood changes and aplastic anemia.

CHARACTERISTICS

Benzene is a colorless to light-yellow liquid with a pleasant sweet odor.

- Formula (C6H6)
- CAS No.: 71-43-2

Benzene is a flammable liquid that can accumulate static electricity. Benzene vapors are heavier that air and may travel to a source of ignition and flash back. The vapors are readily dispersed by wind movement and/or air currents. Liquid benzene tends to float on water and may travel to a source of ignition and spread fire. Benzene is highly reactive with no oxidizing materials.

USES:

Benzene is a component of gasoline, both in the manufacturing process and found naturally in crude oil; Benzene is also used as a feed stock for chemical manufacturing.

HEALTH EFFECTS:

WARNING
Benzene is a cancer-causing agent in humans. All contact should be reduced to the lowest possible level. The above exposure limits are for air levels only. Skin contact may also cause overexposure.

Benzene is one of the most hazardous of all petroleum products because of its adverse health hazards and high flammability.

The following adverse health affects are important to remember where there may be a potential exposure to Benzene:

a) **Acute:** At high concentrations (1000 PPM) Benzene has an acute effect on the central nervous systems causing headaches, dizziness, drowsiness, unconsciousness, and possible death.

   Acute exposure can also cause breathlessness, irritability, and giddiness.

b) **Chronic:** Benzene has the chronic exposure effect on bone marrow (aplastic anemia leukemia).

Chronic exposure can also cause convulsions, liver damage, heart damage, blood diseases (aplastic anemia), and cancer (leukemia). These symptoms can take months or years to surface and can develop without physical or visible indications.

c) Repeated skin contact leads to irritant contact dermatitis (rash); as with any petroleum solvent (which Benzene is also classified as), it will leach the natural oils out of the skin. Direct contact with the skin can cause erythema and/or blistering.

d) Benzene is irritating to eyes and mucous membranes.

e) Flammable/dangerous fire risk: benzene has a very low flash point making it dangerous to have any open flame, spark or source of ignition when vapors are present.

f) Explosive limits in air 1.5 to 8% by volume: benzene is highly flammable at low levels of vapor quantity in air.

PERSONAL PROTECTIVE MEASURES

PNT Consulting LLC employees are not permitted to work in areas where there may be a potential for Benzene exposure.

TRAINING

All employees will be provided awareness training in this program in order to be familiar with the potential hazards and proper safe work procedures to follow if exposed to this health hazard.

Cadmium Awareness

Purpose

While **PNT Consulting LLC** does not expect any exposure to Cadmium, if the job or project that we are working is determined to contain or potentially expose our employees, then we will work with the client to first determine if the hazard can be engineered out or if we will need to establish a protocol using this policy to safely perform the work. The equipment and processes that typically contain Cadmium will be identified by the work permit and or job hazard analysis systems. Procedures for elimination or minimization of exposure will be the 1st line of defense. Special precautions will be exercised when maintenance of ventilation systems and changing of filters is performed.

Appearance: Cadmium metal-soft, blue-white, malleable, lustrous metal or grayish white powder. Some cadmium compounds may also appear as a brown, yellow, or red powdery substance. Cadmium can cause local skin or eye irritation. Cadmium can affect your health if you inhale or if you swallow it. Cadmium that may be immediately dangerous to life or health occur in jobs where workers handle large quantities of cadmium dust or fume; heat cadmium-containing compounds or cadmium-coated surfaces; weld with cadmium solders or cut cadmium-containing materials such as bolts.

The program will be evaluated and updated as needed on an annual basis.

Exposure Limit: TWA PEL 8-Hour (time weighted average, permissible exposure limit) is Five (5) micrograms of cadmium per cubic meter of air 5 ug/m(3), time weighted average for an 8- hour workday. If the PEL is exceeded, this policy will be implemented.

Training

- Only trained and qualified personnel may operate or maintain welding, cutting or brazing equipment. Welders/Cutters who may be exposed or have the potential to be exposed will be trained per this policy and will possess the appropriate certifications for their work scope.

Any Craft or Trade required to perform any of the functions covered by this policy will be required to complete training per **PNT Consulting LLC** Training policy including:

  - A test or other method to determine competency;
  - Training initial to assignment and at least annually thereafter;
  - All training records shall be documented and kept on file with Human Resources for at least one year or for the duration of the covered employee's employment.

- Documentation will include outline or class name, the names and employee numbers of the employees who participated in the training, names and signatures of those who trained the class and a class date.

Medical Surveillance/Written Exposure Plan:

While the company work should not expose employees to, at or above the action level, if those levels are reached, then a written exposure plan including annual reviews and updates will be required. Should employee(s) become exposed to, at or above action levels related to work exposures and cadmium, then employees will receive a medical evaluation, which will include tests to determine exposure and a

medical history. This is provided at no cost to the employee. As with all medical records, these are kept strictly confidential. The employee or representative is entitled to see the records of measurements of the exposure. The employee can also request that medical records for exposure be furnished to the employee's personal physician or designated representative. The written program will be provided for examination and copying upon request of affected employees and their representatives.

Respiratory Protection Program – If respiratory protection is required, see the company's Respiratory Protection Program for complete guidelines to respiratory protection.

Emergency Procedures:

First Aid for eye exposure – direct contact may cause redness or pain. Wash eyes immediately with large amounts of water, and seek medical attention immediately.

First Aid for skin exposure – direct contact may result in irritation. Remove contaminated clothing and shoes immediately. Wash affected area with soap or mild detergent and large amounts of water. Get medical attention immediately.

Ingestion may result in vomiting, abdominal pain, nausea, diarrhea, headache and sore throat. Treatment for symptoms must be administered by medical personnel. Get medical attention immediately.

Inhalation – if large amounts of cadmium are inhaled, the exposed person must be moved to fresh air at once. Get medical attention immediately.

Rescue – move affected person from the hazardous exposure. If the exposed person has been overcome, attempt rescue only after notifying at least one other person and put into effect established emergency procedures.

Respirators – you may be required to wear a respirator for work related to this type of exposure or for emergency response. Only use respirators approved by MSHA and NIOSH. Cadmium does not have a detectable odor except at levels well above the PEL. If you can smell cadmium while wearing a respirator, proceed immediately to fresh air.

PPE – you may be required to wear impermeable clothing, gloves, splash-proof or dust resistant goggles, face shield or other appropriate PPE to prevent skin contact with cadmium.

Model Calosha Lipp Template

1.0 PURPOSE

PNT CONSULTING LLC
SAFETY MANUAL

&

INJURY & ILLNESS PREVENTION PROGRAM

528 County Road 1546
Hughes Springs, TX 75656
903-386-8575

Model Calosha Lipp Template

Table of Contents

Policy Statement on Safety....3
Duties and Responsibilities for Safety....4
Employee Safety Training....8
Employee Safety Contact Report....10
New Employee Safety Orientation....11
Safety Communication....13
Enforcement of Safety Policies....14
Hazard Identification and Evaluation....16
Hazard Correction....19
Accident Investigation....20
Program Records....24
Emergency Medical Services and First Aid....25
Hazard Communication Program....28
Fall Protection....32
Electrical Safety & Lock-out / Tag-out Program....38
Fleet & Driving Safety....45
Confined Space Operations....53
Respiratory Protection....58
Mandatory Information for Employees Using Respirators When Not Required....70
Forklifts....72
Fire Prevention and Emergency Action Plan.....75
Office Safety....78
Heat Illness Prevention....83
Code of Safe Practices....86
Code of Safe Practices Receipt....97
Hazard Communication Employee Training Handbook....98
Driving Safety Rules....107
Company Vehicle Policy Receipt....110

Policy Statement on Safety

The safety and health of each «Company_Name» employee is of primary importance to us. As a company, we are committed to maintaining a safe and healthful working environment. Management will provide all necessary safeguards, programs, and equipment required to reduce the potential for accidents and injuries.

To achieve this goal, we have developed and implemented a comprehensive Safety Manual and Injury and Illness Prevention Program (IIPP). This program is designed to prevent workplace accidents, injuries, and illnesses. A complete copy of the program is maintained at our office at «Company_Street_Address», «Company_City_State_Zip». A copy is also maintained at each independent work site. You may ask to review it at any time. A copy of relevant portions of the program, that are applicable to your job, will also be provided to you. You may also contact «Safety_Persons_Name» at «Safety_Persons_Phone», if you have any questions or concerns.

It is the intent of «Company_Name» to comply with all laws relating to occupational safety and health. To accomplish this, we require the active participation and assistance of all employees. The policies and procedures contained in the following manual are mandatory. You should also be constantly aware of conditions in all work areas that can produce injuries or illness. No employee is required to work at a job that he or she knows is not safe. Never hesitate to inform your foreman or supervisor of any potentially hazardous situation or condition that is beyond your ability or authority to correct immediately. No employee will be discriminated against for reporting safety concerns to management.

It is the responsibility of each employee to support the company safety program and to perform in a manner that assures his or her own personal safety and the safety of others, including customers, visitors and other trades. To be successful in our endeavor, all employees on every level must adopt proper attitudes towards injury and illness prevention. We must also cooperate in all safety and health matters, not only between management and employees, but also between each employee and his or her respective coworkers. Only through such an effort can any safety program be successful. Our objective is a safety and health program that will reduce the total number of injuries and illnesses to an absolute minimum. Our ultimate goal is zero accidents.

_____

Nicolaza R Harvey

CEO / CFO

Duties and Responsibilities for Safety

A successful Safety and Injury and Illness Prevention Program can only be achieved and maintained when there is active interest, participation, and accountability at all levels of the organization. To ensure this, «Company_Name», delegates the following safety duties by job title. Please keep in mind that this is not an all-inclusive list. In some cases employees will need to perform safety duties outside their regular responsibilities to prevent accidents.

Executive management must plan, organize, and administer the program by establishing policy, setting goals and objectives, assigning responsibility, motivating subordinates, and monitoring results. «Owner_or_CEO_Name» will support and maintain an ongoing Safety and Injury and Illness Prevention Program through the following:

1. Providing clear understanding and direction to all management and union employees regarding the importance of safety through the development, implementation, monitoring and revision of policy and procedures.

2. Providing financial support for the Injury and Illness Prevention Program through the provision of adequate funds for the purchase of necessary safety materials, safety equipment, proper personal protective equipment, adequate time for employee safety training, and maintenance of tools and equipment.

3. Overseeing development, implementation, and maintenance of the IIPP and other required safety programs.

4. Maintaining a company commitment to accident prevention by expecting safe conduct on the part of all managers, supervisors, and employees.

5. Holding all levels of management and employees accountable for accident prevention and safety.

6. Reviewing all accident investigations to determine corrective action.

Managers and Supervisors play a key role in the prevention of accidents on the job. They have direct contact with the employees and know the safety requirements for various jobs. Safety responsibilities for these individuals include:

1. Enforce all safety rules in the Code of Safe Practices and ensure safe work procedures.

2. Verifying corrective action has been taken regarding safety hazards and accident investigations.

3. Conducting periodic documented inspections of the work sites to identify and correct unsafe actions and conditions that could cause accidents.

4. Act as a leader in company safety policy and setting a good example by following all safety rules.

5. Becoming familiar with local, state, and federal safety regulations. The Safety Coordinator is available for assistance.

6. Train all new and existing employees in proper safety procedures and the hazards of the job.

7. Instruct all employees, under their supervision, in safe work practices and job safety requirements.

8. Hold occasional safety meetings with employees.

9. Ensure employee proficiency when assigning work requiring specific knowledge, special operations or equipment.

10. Ascertain that all machinery, equipment, and workstations are maintained in safe working condition and operate properly.

11. Correct unsafe acts and conditions that could cause accidents.

12. Communicate with all employees about safety and accident prevention activities.

13. Correct the cause of any accident as soon as possible.

14. Ascertain that proper first aid and fire fighting equipment is maintained and used when conditions warrant its use.

15. Maintain good housekeeping conditions at all times.

16. Investigate all injuries and accidents to determine their cause and potential corrective action.

17. Ascertain that all injuries involving our employees that require medical attention are properly treated and promptly reported to the office.

The Safety Coordinator or Safety Officer acts as a safety resource for the company and is responsible for maintaining program records. They will also be our primary person to deal with outside agencies regarding the safety program and its contents. Paul B Harvey, Chief Operation Officer 903-641-9791 is currently

responsible for this role. Additional duties include:

1. Coordination of all loss prevention activities as a representative of management. Acting as a consultant to management in the implementation and administration of the Safety Program.

2. Develop and implement loss prevention policies and procedures designed to insure compliance with the applicable rules and regulations of all federal, state, and local agencies.

3. Review all accident reports to determine cause and preventability.

4. Conduct periodic reviews of the program and job sites to evaluate performance, discuss problems and help solve them.

5. Consult with representatives of our insurance companies in order that their loss control services will support the Safety Program.

6. Review Workers' Compensation Claims. Help supply the insurance carrier with information about injured employees in order to keep loss reserves as low as possible.

Every employee is responsible for working safely, both for self-protection and for protection of fellow workers. Employees must also support all company safety efforts. Specific employee safety responsibilities include:

1. If you are unsure how to do any task safely, ask your supervisor.

2. Read and abide by all requirements of the Safety Manual and Injury and Illness Prevention Program (IIPP).

3. Know and follow the Code of Safe Practices and all company safety policies and rules.

4. Wear all required personal protective equipment.

5. Report all accidents and injuries, no matter how minor, to your supervisor immediately.

6. Do not operate any equipment you have not been trained and authorized to use.

7. Report any safety hazards or defective equipment immediately to your supervisor.

8. Do not remove, tamper with or defeat any guard, safety device or interlock.

9. Never use any equipment with inoperative or missing guards, safety devices or interlocks.

10. Never possess, or be under the influence of, alcohol or controlled substances while on the premises.

11. Never engage in horseplay or fighting.

12. Participate in, and actively support, the safety program.

Employee Safety Training

California law requires that employees be trained in the safe methods of performing their job. «Company_Name» is committed to instructing all employees in safe and healthful work practices. Awareness of potential hazards, as well as knowledge of how to control them, is critical to maintaining a safe and healthful work environment and preventing injuries. To achieve this goal, we will provide training to each employee on general safety issues and safety procedures specific to that employee's work assignment.

Every new employee will be given instruction by their Supervisor in the general safety requirements of their job. A copy of our Code of Safe Practices shall also be provided to each employee.

Managers, Supervisors, and employees will be trained at least twice per year on various accident prevention topics.

Training provides the following benefits:

- Makes employees aware of job hazards
- Teaches employees to perform jobs safely
- Promotes two way communication
- Encourages safety suggestions
- Creates interest in the safety program
- Fulfills Cal/OSHA requirements

Employee training will be provided at the following times:

1. All new employees will receive a safety orientation their first day on the job.

2. All new employees will be given a copy of the Code of Safe Practices and required to read and sign for it.

3. All employees given a new job assignment for which training has not been previously provided will be trained before beginning the new assignment.

4. Whenever new substances, processes, procedures or equipment that represent a new hazard are introduced into the workplace.

5. Whenever PNT Consulting LLC is made aware of a new or previously unrecognized hazard.

6. Whenever management believes that additional training is necessary.

7. After all serious accidents.

8. When employees are not following safe work rules or procedures.

Training topics will include, but not be limited to:

- Employee's safety responsibility
- General safety rules
- Code of Safe Practices
- Safe job procedures
- Ergonomics
- Use of hazardous materials
- Use of equipment
- Emergency procedures
- Safe lifting and material handling practices
- Contents of safety program

Documentation of Training

All training will be documented on one of the following three forms.

New Employee Safety Orientation
Employee Safety Contact Form
Safety Meeting Report

The following training method should be used. Actual demonstrations of the proper way to perform a task are very helpful in most cases.

- **Tell them** how to do the job safely
- **Show them** how to do the job safely
- **Have them tell you** how to do the job safely
- **Have them show you** how to do the job safely
- **Follow up** to ensure they are still performing the job safely

Model Calosha Lipp Template
PNT Consulting LLC

Employee Safety Contract Report

Work site: _____ Manager / Supervisor: _____

Employee name _____ Date _____

Job title _____

Safety concern:

_____
_____
_____
_____
_____
_____
_____
_____
_____
_____
_____
_____
_____
_____

Corrective action:

_____
_____
_____
_____
_____
_____
_____
_____
_____
_____
_____
_____
_____
_____

Signed _____
Employee

Signed _____
Manager / Supervisor

«Company_Name»

New Employee Safety Orientation

The Supervisor will verbally cover the following items with each new employee on the first day of their employment.

Employee name _____ Start date _____

Work site_____Position _____

Instruction has been received in the following areas.

☐ 1. Code of Safe Practices.*

☐ 2. Hazard Communication (chemicals) Employee Training Handbook.*

☐ 3. Driving Safety Rules.*

☐ 4. Safety rule enforcement procedures.

☐ 5. Necessity of reporting ALL injuries, no matter how minor, IMMEDIATELY.

☐ 6. Proper method of reporting safety hazards.

☐ 7. Emergency procedures and First Aid.

☐ 8. Proper work clothing & required personal protective equipment.

☐ 9. List all special equipment, such as lifts, employee is trained and authorized to use.

☐ 10. Emergency Exits and Fire Extinguishers.

_____

_____

_____

* Give a copy of these items to the employee.

I agree to abide by all company safety polices and the Code of Safe Practices. I also understand that failure to do so may result in disciplinary action and possible termination.

Signed _____ Date _____

Employee

Signed _____ Date _____

Supervisor

Safety Communication

This section establishes procedures designed to develop and maintain employee involvement and interest in the Safety Manual and IIPP. These activities will also ensure effective communication between management and employees on safety related issues that is of prime importance to PNT Consulting LLC. The following are some of the safety communication methods that may be used:

1. Periodic safety meetings with employees that encourage participation and open, two-way communication.

2. New employee safety orientation and provision of the Code of Safe Practices.

3. Provision and maintenance of employee bulletin boards discussing safety issues, accidents, and general safety suggestions.

4. Written communications from management or the Safety Coordinator, including memos, postings, payroll stuffers, and newsletters.

5. Anonymous safety suggestion program.

Employees will be kept advised of highlights and changes relating to the safety program. Management shall relay changes and improvements regarding the safety program to employees, as appropriate. Employees will be involved in future developments and safety activities, by requesting their opinions and comments, as necessary.

All employee-initiated safety related suggestions shall be properly answered, either verbally or in writing, by the appropriate level of management. Unresolved issues shall be relayed to Nicolaza R Harvey.

All employees are encouraged to bring any safety concerns they may have to the attention of management. PNT Consulting LLC will not discriminate against any employee for raising safety issues or concerns.

PNT Consulting LLC also has a system of anonymous notification whereby employees who wish to inform the company of workplace hazards without identifying themselves may do so by phoning or sending written notification to the following address:

Paul B Harvey, Chief Operations Officer
528 County Road 1546
Hughes Springs, TX 75656
903-641-9791

Enforcement of Safety Policies

The compliance of all employees with PNT Consulting LLC's Safety Manual and IIPP is mandatory and shall be considered a condition of employment.

The following programs will be utilized to ensure employee compliance with the safety program and all safety rules.

- Training programs
- Retraining
- Disciplinary action
- Optional safety incentive programs

Training Programs

The importance of safe work practices and the consequences of failing to abide by safety rules will be covered in the New Employee Safety Orientation and safety meetings. This will help ensure that all employees understand and abide by PNT Consulting LLC safety policies.

Retraining

Employees that are observed performing unsafe acts or not following proper procedures or rules will be retrained by their supervisor. A Safety Contact Report may be completed by the supervisor to document the training. If multiple employees are involved, additional safety meetings will be held.

Safety Incentive Programs

Although strict adherence to safety policies and procedures is required of all employees, the company may choose to periodically provide recognition of safety-conscious employees and job sites without accidents through a safety incentive program.

Disciplinary Action:

The failure of an employee to adhere to safety policies and procedures established by PNT Consulting LLC can have a serious impact on everyone concerned. An unsafe act can threaten not only the health and well being of the employee committing the unsafe act but can also affect the safety of his/her coworkers and customers. Accordingly, any employee who violates any of the company's safety policies will be subject to disciplinary action.

Note: Failure to promptly report any on-the-job accident or injury, on the same day as occurrence, is considered a serious violation of the Company's Code of Safe Practices. Any

employee who fails to immediately report a work-related accident or injury, no matter how minor shall be subject to disciplinary action.

Employees will be disciplined for infractions of safety rules and unsafe work practices that are observed, not just those that result in an injury. Often, when an injury occurs, the accident investigation will reveal that the injury was caused because the employee violated an established safety rule and/or safe work practice(s). In any disciplinary action, the supervisor should be cautious that discipline is given to the employee for safety violations, and not simply because the employee was injured on the job or filed a Workers' Compensation claim.

Violations of safety rules and the Code of Safe Practices are to be considered equal to violations of other company policy. Discipline for safety violations will be administered in a manner that is consistent with PNT Consulting LLC's system of progressive discipline. If, after training, violations occur, disciplinary action will be taken as follows:

1. Oral warning. Document it, including date and facts on the "Safety Contact Report" form. Add any pertinent witness statements. Restate the policy and correct practice(s).

2. Written warning. Retrain as to correct procedure/practice.

3. Written warning with suspension.

4. Termination

As in all disciplinary actions, each situation is to be carefully evaluated and investigated. The particular step taken in the disciplinary process will depend on the severity of the violation, employee history, and regard to safety. Managers and supervisors should consult with the office if there is any question about whether or not disciplinary action is justified. Employees may be terminated immediately for willful or extremely serious violations. Union employees are entitled to the grievance process specified by their contract.

Note: You must be consistent in the enforcement of all safety rules.

Hazard Identification and Evaluation

To assist in the identification and correction of hazards, PNT Consulting LLC has developed the following procedures. These procedures are representative only and are not exhaustive of all the measures and methods that will be implemented to guard against injury from recognized and potential hazards in the workplace. As new hazards are identified or improved work procedures developed, they will be promptly incorporated into our Safety Manual. The following methods will be utilized to identify hazards in the workplace:

- Loss analysis of accident trends
- Accident investigation
- Employee observation
- Employee suggestions
- Regulatory requirements for our industry
- Outside agencies such as the fire department and insurance carriers
- Periodic safety inspections

Loss Analysis

Periodic loss analyses will be conducted by Paul B Harvey. These will help identify areas of concern and potential job hazards. The results of these analyses will be communicated to management, supervision, and employees through safety meetings and other appropriate means.

Accident Investigations

All accidents and injuries will be investigated in accordance with the guidelines contained in this program. Accident investigations will focus on all causal factors and corrective action including the identification and correction of hazards that may have contributed to the accident.

Employee Observation

Superintendents and foremen shall be continually observing employees for unsafe actions and taking corrective action as necessary.

Employee Suggestions

Employees are encouraged to report any hazard they observe to their supervisor. No employee of PNT Consulting LLC is to ever be disciplined or discharged for reporting any workplace hazard or unsafe condition. However, employees who do NOT report potential hazards or unsafe conditions that they are aware of will be subject to disciplinary action.

Regulatory Requirements

All industries are subject to government regulations relating to safety. Many of these regulations are specific to our type of business. Copies of pertinent regulations can be obtained from the Safety Coordinator.

Outside Agencies

Several organizations will assist us in identifying hazards in our workplace. These include safety officers from other contractors, insurance carrier safety and health consultants, private industry consultants, the fire department, and Cal/OSHA Consultation.

Periodic Safety Inspections

Periodic safety inspections ensure that physical and mechanical hazards are under control and identify situations that may become potentially hazardous. Inspections shall include a review of the work habits of employees in all work areas. These inspections will be conducted by the Supervisor, Manager, Safety Coordinator or other designated individual.

Periodic safety inspections will be conducted:

- When new substances, process, procedures or equipment are used.
- When new or previously unrecognized hazards are identified.
- Periodically by the Supervisor.
- Periodically by the Safety Coordinator.

These inspections will focus on both unsafe employee actions as well as unsafe conditions. The following is a partial list of items to be checked.

- The proper use, condition, maintenance and grounding of all electrically operated equipment.
- The proper use, condition, and maintenance of safeguards for all power-driven equipment.
- Compliance with the Code of Safe Practices.
- Housekeeping and personal protective equipment.
- Hazardous materials.
- Proper material storage.
- Provision of first aid equipment and emergency medical services.

Any and all hazards identified will be corrected as soon as practical in accordance with the PNT Consulting LLC hazard correction policy.

If imminent or life threatening hazards are identified, which cannot be immediately

corrected, all employees must be removed from the area, except those with special training required to correct the hazard, who will be provided necessary safeguards.

Documentation of Inspections

Safety inspections will be documented to include the following:

- Date on which the inspection was performed.
- The name and title of person who performed the inspection.
- Any hazardous conditions noted or discovered and the steps or procedures taken to correct them.
- Signature of the person who performed the inspection.

One copy of the completed form should be sent to the office. All reports shall be kept on file for a minimum of two (2) years.

Hazard Correction

The following procedures will be used to evaluate, prioritize and correct identified safety hazards. Hazards will be corrected in order of priority: the most serious hazards will be corrected first.

Hazard Evaluation

Factors that will be considered when evaluating hazards include:

- Potential severity - The potential for serious injury, illness or fatality
- Likelihood of exposure - The probability of the employee coming into contact with the hazard
- Frequency of exposure - How often employees come into contact with the hazard
- Number of employees exposed
- Possible corrective actions - What can be done to minimize or eliminate the hazard
- Time necessary to correct - The time necessary to minimize or eliminate the hazard

Techniques for Correcting Hazards

1. Engineering Controls: Could include machine guarding, ventilation, noise reduction at the source, and provision of material handling equipment. These are the first and preferred methods of control.

2. Administrative Controls: The next most desirable method would include rotation of employees or limiting exposure time.

3. Personal Protective Equipment: Includes hard hats, hearing protection, respirators and safety glasses. These are often the least effective controls for hazards and should be relied upon only when other controls are impractical.

Documentation of Corrective Action

All corrective action taken to mitigate hazards should be documented. Depending on the circumstances, one of the following forms should be used:

- Safety Contact Report
- Safety Meeting Report
- Memo or letter
- Safety inspection form

All hazards noted on safety inspections will be rechecked on each subsequent inspection

and notations made as to their status.

Accident Investigation

The Supervisor, Manager, or other designated individual will investigate all work-related accidents in a timely manner. This includes minor incidents and "near accidents", as well as serious injuries. An accident is defined as any unexpected occurrence that results in injury to personnel, damage to equipment, facilities, or material, or interruption of normal operations.

Responsibility for Accident Investigation

Immediately upon being notified of an accident, the Supervisor, Manager, or other designated individual shall conduct an investigation. The purpose of the investigation is to determine the cause of the accident and corrective action to prevent future reoccurrence; not to fix blame or find fault. An unbiased approach is necessary in order to obtain objective findings.

The Purpose of Accident Investigations:

- To prevent or decrease the likelihood of similar accidents.
- To identify and correct unsafe work practices and physical hazards. Accidents are often caused by a combination of these two factors.
- To identify training needs. This makes training more effective by focusing on factors that are most likely to cause accidents.

What Types of Incidents Do We Investigate?

- Fatalities
- Serious injuries
- Minor injuries
- Property damage
- Near misses

Procedures for Investigation of Accidents

Immediately upon being notified of an accident the Supervisor, Manager, or other designated individual will:

1. Visit the accident scene, as soon as possible, while facts and evidence are still fresh and before witnesses forget important details and to make sure hazardous conditions

to which other employees or customers could be exposed are corrected or have been removed;

2. Provide for needed first aid or medical services for the injured employee(s).

3. If possible, interview the injured worker at the scene of the accident and verbally "walk" him or her through a re-enactment. All interviews should be conducted as privately as possible. interview all witnesses individually and talk with anyone who has knowledge of the accident, even if they did not actually witness it.

4. Report the accident to the office at PNT Consulting LLC. Accidents will be reported by the office to the insurance carrier within 24 hours. All serious accidents will be reported to the carrier as soon as possible.

5. Consider taking signed statements in cases where facts are unclear or there is an element of controversy.

6. Thoroughly investigate the accident to identify all accident causes and contributing factors. Document details graphically. Use sketches, diagrams and photos as needed. Take measurements when appropriate.

7. All accidents involving death, disfigurement, amputation, loss of consciousness or hospitalization for more than 24 hours must be reported to Cal/OSHA immediately.

8. Focus on causes and hazards. Develop an analysis of what happened, how it happened, and how it could have been prevented. Determine what caused the accident itself, not just the injury.

9. Every investigation must also include an action plan. How can such accidents be prevented in the future?

10. In the event a third party or defective product contributed to the accident, save any evidence as it could be critical to the recovery of claim costs.

<u>Accurate & Prompt Investigations</u>

- Ensures information is available
- Causes can be quickly corrected
- Helps identify all contributing factors
- Reflects management concern
- Reduces chance of recurrence

<u>Investigation Tips</u>

- Avoid placing blame
- Document with photos and diagrams, if needed
- Be objective, get the facts
- Reconstruct the event
- Use open-ended questions

Questions to Ask

When investigating accidents, open-ended questions such as who?, what?, when?, where?, why?, and how? will provide more information than closed-ended questions such as "Were you wearing gloves?"

Examples include:

- How did it happen?
- Why did it happen?
- How could it have been prevented?
- Who was involved?
- Who witnessed the incident?
- Where were the witnesses at the time of the incident?
- What was the injured worker doing?
- What was the employee working on?
- When did it happen?
- When was the accident reported?
- Where did it happen?
- Why was the employee assigned to do the job?

The single, most important question that must be answered as the result of any investigation is:

> "What do you recommend be done (or have you done) to prevent this type of incident from recurring?"

Once the Accident Investigation is Completed

- Take or recommend corrective action
- Document corrective action
- Management and the Safety Coordinator will review the results of all investigations
- Consider safety program modifications
- Information obtained through accident investigations can be used to update and improve our current program

Program Records

Paul B Harvey, Chief Operations Officer will ensure the maintenance of all Safety Manual and IIPP records, for the listed periods, including:

1.	New Employee Safety Orientation forms	length of employment
2.	Code of Safe Practices Receipt	length of employment
3.	Disciplinary actions for safety	1 year
4.	Safety inspections	2 years
5.	Safety meeting reports	2 years
6.	Safety Contact Reports	2 years
7.	Accident investigations	5 years
8.	Cal/OSHA log of injuries	5 years
9.	Inventory of Hazardous Materials (if any)	forever
10.	Employee exposure or medical records	forever

Records are available for review at 528 County Road 1546, Hughes Springs, TX 75656 903-386-8575

Emergency Medical Services and First Aid

PNT Consulting LLC will ensure the availability of emergency medical services for its employees at all times. We will also ensure the availability of a suitable number of appropriately trained persons to render first aid. Paul B Harvey will maintain a list of trained individuals and take steps to provide training for those that desire it.

First-Aid Kits

Every work site shall have access to at least one first-aid kit in a weatherproof container. The first-aid kit will be inspected regularly to ensure that it is well stocked, in sanitary condition, and any used items are promptly replaced. The contents of the first-aid kit shall be arranged to be quickly found and remain sanitary. First-aid dressings shall be sterile and in individually sealed packages. The following minimum first-aid supplies shall be kept:

	Type of Supply Required by Number of Employees							
Dressings in adequate quantities consisting of:	1-5	6-15		16-200				200+
Adhesive dressings	X	X		X		X		
Adhesive tape rolls, 1-inch wide	X	X		X		X		
Eye dressing packet		X	X		X		X	
1-inch gauze bandage roll or compress		X		X		X		
2-inch gauze bandage roll or compress	X	X		X		X		
4-inch gauze bandage roll or compress		X		X		X		
Sterile gauze pads, 2-inch square	X	X		X		X		
Sterile gauze pads, 4-inch square	X	X		X		X		
Sterile surgical pads suitable for pressure dressings					X		X	
Triangular bandages		X	X		X		X	
Safety pins	X	X		X		X		
Tweezers and scissors		X	X		X		X	
Cotton-tipped applicators*				X		X		
Forceps*				X		X		
Emesis basin*					X		X	
Flashlight*				X		X		
Magnifying glass*				X		X		
Portable oxygen and its breathing equipment*						X		
Tongue depressors*							X	
Appropriate record forms*	X	X		X		X		
First-aid textbook, manual or equivalent*	X	X		X		X		

*To be readily available but not necessarily within the first-aid kit.

Drugs, antiseptics, eye irrigation solutions, inhalants, medicines, or proprietary preparations

shall not be included in PNT Consulting LLC first-aid kits unless specifically approved, in writing, by an employer-authorized, licensed physician. Other supplies and equipment, if provided, shall be in accordance with the documented recommendations of an employer-authorized licensed physician upon consideration of the extent and type of emergency care to be given based upon the anticipated incidence and nature of injuries and illnesses and availability of transportation to medical care.

First Aid

The designated first aid person on each site will be available at all times to render appropriate first aid for injuries and illnesses. Proper equipment for the prompt transportation of the injured or ill person to a physician or hospital where emergency care is provided, or an effective communication system for contacting hospitals or other emergency medical facilities, physicians, ambulance and fire services, shall also be provided. The telephone numbers of the following emergency services in the area shall be posted near the job telephone, or otherwise made available to the employees where no job site telephone exists:

1. A company authorized physician or medical clinic, and at least one alternate if available.
2. Hospitals.
3. Ambulance services.
4. Fire-protection services.

Prior to the commencement of work at any site, the Supervisor or Manager shall locate the nearest preferred medical facility and establish that transportation or communication methods are available in the event of an employee injury.

Each employee shall be informed of the procedures to follow in case of injury or illness through our new employee orientation program, Code of Safe Practices, and safety meetings.

Where the eyes or body of any person may be exposed to injurious or corrosive materials, suitable facilities for drenching the body or flushing the eyes with clean water shall be conspicuously and readily accessible.

Accident Procedures

These procedures are to be followed in the event of an employee injury in the course of employment.

1. **For severe accidents call 911 and request the Paramedics.**

2. **Employees must report all work related injuries to their Supervisor immediately. Even if they do not feel that it requires medical attention.** Failure to do so may result in a delay of Workers' Compensation benefits and disciplinary action.

3. The Supervisor, employee, and first aid person, should determine whether or not outside medical attention is needed. When uncertainty exists on the part of any individual, the employee should be sent for professional medical care.

4. If medical attention is not desired or the employee refuses treatment, you must still fill out a «Company_Name» Accident Report" in case complications arise later.

5. In all cases, if the employee cannot transport himself or herself for any reason, transportation should be provided.

6. In the event of a serious accident involving hospitalization for more than 24 hours, amputation, permanent disfigurement, loss of consciousness or death, phone contact should be made with the office at 903-386-8575. Contact must also be made with the nearest Cal/OSHA office within 8 hours.

Hazard Communication Program

Introduction

It is the policy of PNT Consulting LLC that the first consideration of work shall be the protection of the safety and health of all employees. We have developed this Hazard Communication Program to ensure that all employees receive adequate information about the possible hazards that may result from the various materials used in our operations. This Hazard Communication Program will be monitored by Paul B Harvey, Chief Operations Officer who will be responsible for ensuring that all facets of the program are carried out, and that the program is effective.

Our program consists of the following elements:

1. Hazardous material inventory.
2. Collection and maintenance of Material Safety Data Sheets.
3. Container labeling.
4. Employee training.

The following items are not required to be included in the program and are therefore omitted:

- Foods, drugs, cosmetics or tobacco.
- Untreated wood products.
- Hazardous waste.
- Consumer products packaged for sale to and use by the general public, provided that our exposure is not significantly greater than typical consumer exposure.

Hazardous Material Inventory

Paul B Harvey maintains a list of all hazardous materials used in our operations. This list contains the name of the product, the type of product (solvent, adhesive etc.) and the name and address of the manufacturer.

Material Safety Data Sheets (MSDS)

Copies of MSDS for all hazardous substances to which our employees may be exposed will be kept in a binder in the office at 528 County Road 1546, Hughes Springs, TX 75656. These MSDS are available to all employees, at all times, upon request. Copies of the most commonly used products will also be kept by the Supervisor at the work site.

Paul B Harvey will be responsible for reviewing incoming MSDS for new and significant health/safety information. They will ensure that any new information is passed on to the affected employees.

Paul B Harvey will also review all incoming MSDS for completeness. If an MSDS is missing or obviously incomplete, a new MSDS will be requested from the manufacturer. CAL/OSHA will be notified if a complete MSDS is not received and the manufacturer will not supply one.

New materials will not be introduced into the shop or field until a MSDS has been received. The purchasing department will make it an ongoing part of their function to obtain MSDS for all new materials when they are first ordered.

Container Labeling

No container of hazardous substances will be used unless the container is correctly labeled and the label is legible.

All chemicals in cans, bags, drums, pails, etc., will be checked by the receiving department to ensure the manufacturer's label is intact, is legible, and has not been damaged in any manner during shipment. Any containers found to have damaged labels will be held until a new label has been installed. New labels will be obtained from the manufacturer.

The label must contain:

- The chemical name of the contents.
- The appropriate hazard warnings.
- The name and address of the manufacturer.

All secondary containers will be labeled as to their contents with a reference to the original label.

Employee Information and Training

All employees will be provided information and training on the following items through the PNT Consulting LLC safety training program and prior to starting work with hazardous substances:

1. An overview of the requirements of the Hazard Communication Standard, including their rights under this regulation.
2. Information regarding the use of hazardous substances in their specific work areas.
3. The location and availability of the written hazard communication program. The program will be available from the Supervisor and Paul B Harvey.

4. The physical and health hazards of the hazardous substances in use.
5. Methods and observation techniques used to determine the presence or release of hazardous substances in the work area.
6. The controls, work practices and personal protective equipment that are available for protection against possible exposure.
7. Emergency and first aid procedures to follow if employees are exposed to hazardous substances.
8. How to read labels and material safety data sheets to obtain the appropriate hazard information.

Hazardous Non-Routine Tasks

Infrequently, employees may be required to perform hazardous non-routine tasks. Prior to starting this work, each involved employee will be given information by his/her supervisor about hazards to which they may be exposed during such activity.

This information will include:

- The specific hazards.
- Protective/safety measures which must be utilized.
- The measures the company has taken to lessen the hazards, including special ventilation, respirators, the presence of another employee, emergency procedures, etc.

Informing Outside Contractors and Vendors

To ensure that outside contractors are not exposed to our hazardous materials, and to ensure the safety of the contractor's employees, it will be the responsibility of the Supervisor to provide outside contractors the following information:

- The hazardous substances under our control that they may be exposed to while at the work site.
- The precautions the contractor's employees must take to lessen the possibility of exposure.

We will obtain from outside contractors and vendors the name of any hazardous substances the contractor's employees may be using at a work site or bringing into our facility. The contractor must also supply a copy of the material safety data sheet relevant to these materials.

Employee Rights Under The Hazard Communication Standard

At any time, an employee has the right to:

- Access the MSDS folder, and the Hazard Communication Program.
- Receive a copy of any environmental sampling data collected in the workplace.
- See their employment medical records upon request.

Fall Protection

PNT Consulting LLC has the following requirements for fall protection at all of our work-sites.

Fall Protection is Required

When working where there is a hazard of falling more than 7 ½ feet from the perimeter of a structure, unprotected sides and edges, leading edges, through shaft ways and openings, sloped roof surfaces steeper than 7:12, or other sloped surfaces steeper than 40 degrees not otherwise adequately protected. Fall protection is also required when working in boom lifts.

Fall Protection Types

One of the following four types of fall protection systems will be used when our employees are exposed to fall hazards in excess of 7 ½ feet:

1. Standard guardrails, cables or floor hole covers
2. Personal fall arrest system
3. Positioning devices
4. Fall restraint systems

Standard Guardrails, Safety Cables, or Covers

These are the easiest and most cost effective methods of providing fall protection and have a very high success rate. Standard guardrails, safety cables, floor hole and sky light covers are our preferred means of fall protection on job sites. The following rules will be followed when using them:

1. Railings shall be constructed of wood, or in an equally substantial manner from other materials, and shall consist of a top rail not less than 42 inches or more than 45 inches in height measured from the upper surface of the top rail to the floor, platform, runway or ramp level and a mid rail. The mid rail shall be halfway between the top rail and the floor, platform, runway or ramp. "Selected lumber" free from damage that affects its strength, shall be used.

2. Wooden posts shall be not less than 2 inches by 4 inches in cross section, spaced at 8-foot or closer intervals.

3. Wooden top railings shall be smooth and of 2-inch by 4-inch or larger material. Double, 1-inch by 4-inch members may be used for this purpose, provided that one member is fastened in a flat position on top of the posts and the other fastened in an edge-up

position to the inside of the posts and the side of the top member. Mid rails shall be of at least 1-inch by 6-inch material.

4. The rails shall be placed on the side of the post that will afford the greatest support and protection.

5. All railings, including their connections and anchorage, shall be capable of withstanding without failure, a force of at least 200 pounds applied to the top rail within 2 inches of the top edge, in any outward or downward direction, at any point along the top edge. When the 200 pound test load is applied in a downward direction, the top edge of the guardrail shall not deflect to a height less than 39 inches above the walking/working level.

6. Mid-rails, screens, mesh, intermediate vertical members, solid panels, and equivalent members shall be capable of withstanding, without failure, a force of at least 150 pounds applied in any downward or outward direction at any point along the mid-rail, screen, mesh, or other intermediate member.

7. Railings exposed to heavy stresses from employees trucking or handling materials shall be provided additional strength by the use of heavier stock, closer spacing of posts, bracing, or by other means.

8. The ends of the rails shall not overhang the terminal posts, except where such overhang does not constitute a projection hazard.

9. Railings shall be so surfaced as to prevent injury to an employee from punctures or lacerations, and to prevent snagging of clothing.

10. Steel banding and plastic banding shall not be used as top rails or mid-rails.

11. Railings receiving heavy stresses from employees trucking or handling materials shall be provided additional strength by the use of heavier stock, closer spacing of posts, bracing, or by other means.

12. Floor, roof and skylight openings shall be guarded by a standard railing and toe boards or a cover. Covering shall be capable of safely supporting the greater of 400-pounds or twice the weight of worker(s) and material(s) placed thereon.

13. Coverings shall be secured in place to prevent accidental removal or displacement, and shall bear a pressure sensitized, painted, or stenciled sign with legible letters not less than one inch high, stating: "Opening--Do Not Remove." Markings of chalk or keel shall not be used.

14. Ladderway floor openings or platforms shall be guarded by standard railings with standard toe boards on all exposed sides, except at the entrance to the opening, with

the passage through the railing either provided with a swinging gate or so offset that a person cannot walk directly into the opening.

15. Floor holes, into which persons can accidentally walk, shall be guarded by either a standard railing with standard toe boards on all exposed sides, or a floor hole cover of standard strength and construction that is secured against accidental displacement. While the cover is not in place, the floor hole shall be protected by standard railings.

16. Wall openings, from which there is a drop of more than 4 feet, and the bottom of the opening is less than 3 feet above the working surface, shall be guarded with either a standard rail or intermediate rail or both.

17. An extension platform outside a wall opening onto which materials can be hoisted for handling shall have side rails or equivalent guards of standard specifications. One side of an extension platform may have removable railings in order to facilitate handling materials.

18. Wall opening protection barriers shall be of such construction and mounting that, when in place at the opening, the barrier is capable of withstanding a load of at least 200 pounds applied in any direction (except upward).

19. All elevator shafts in which cages are not installed and which are not enclosed with solid partitions and doors shall be guarded on all open sides by standard railings and toe boards.

20. A full body harness and lanyard are required when using boom lifts.

Personal Fall Arrest Systems

Personal fall arrest systems consist of a full body harness and a shock-absorbing lanyard attached to suitable anchorage. They are also an effective means of preventing fall accidents. The system does not actually stop you from falling, but catches you and safely stops you from hitting the level below. Fall arrest systems will be our preferred means of protection when standard guardrails, safety cables, or covers are not practical. The following rules, in addition to the manufacturer's requirements and OSHA regulations, will be observed:

1. Ropes and straps (webbing) used in lanyards, lifelines, and strength components of body harnesses shall be made from synthetic fibers except when they are used in conjunction with hot work where the lanyard may be exposed to damage from heat or flame.

2. Anchorages used for attachment of personal fall arrest equipment shall be independent of any anchorage being used to support or suspend platforms and capable of supporting at least 5,000 pounds per employee attached, or shall be designed, installed, and used as part of a complete personal fall arrest system which maintains a safety factor of at least two; and under the supervision of a qualified person.

3. The attachment point of the body belt shall be located in the center of the wearer's back. The attachment point of the body harness shall be located in the center of the wearer's back near shoulder level, or above the wearer's head.

4. Where practical, the anchor end of the lanyard shall be secured at a level not lower than the employee's waist, limiting the fall distance to a maximum of 4 feet.

5. Harnesses, lanyards, and other components shall be used only for employee protection as part of a personal fall arrest system and not to hoist materials.

6. Personal fall arrest systems and components subjected to impact loading shall be immediately removed from service and shall not be used again for employee protection until inspected and determined by a competent person to be undamaged and suitable for reuse.

7. PNT Consulting LLC shall provide for prompt rescue of employees in the event of a fall or shall assure that employees are able to rescue themselves.

8. Personal fall arrest systems shall be inspected prior to each use for wear, damage and other deterioration, and defective components shall be removed from service.

9. Any lanyard, safety harness, or drop line subjected to in-service loading, as distinguished from static load testing, shall be immediately removed from service and shall not be used again for employee safeguarding.

10. Personal fall arrest systems shall not be attached to guardrails, unless the guardrail is capable of safely supporting the load.

11. Each personal fall arrest system shall be inspected not less than twice annually by a competent person in accordance with the manufacturer's recommendations. The date of each inspection shall be documented.

12. Personal fall arrest systems will be rigged such that an employee can neither free fall more than 4 feet, nor contact any lower level.

13. Personal fall arrest systems will bring an employee to a complete stop. They will also limit maximum deceleration distance an employee travels to 3.5 feet and have sufficient strength to withstand twice the potential impact energy of an employee free falling a distance of 6 feet, or the free fall distance permitted by the system, whichever is less.

Positioning Device Systems

Positioning device systems are designed to allow employees to work with both hands free at elevated locations. By their very nature, they provide some level of fall protection. They are not as effective as railings or fall arrest systems. Positioning device systems may be used together with a fall arrest system for greater safety. Their use shall conform to the following provisions:

1. Positioning devices shall be rigged such that an employee cannot free fall more than 2 feet.

2. Positioning device systems shall be inspected prior to each use for wear, damage, and other deterioration, and defective components shall be removed from service.

3. Body belts, harnesses, and components shall be used only for employee protection (as part of a personal fall arrest system or positioning device system) and not to hoist materials.

4. The use of non-locking snap hooks is prohibited.

5. Anchorage points for positioning device systems shall be capable of supporting two times the intended load or 3,000 pounds, whichever is greater.

Personal Fall Restraint

Fall restraint systems are designed to prevent the wearer from reaching the edge or danger area and thus prevent them from falling. Body belts or harnesses may be used for personal

fall restraint.

1. Body belts shall be at least one and five-eighths (1 5/8) inches wide.

2. Anchorage points used for fall restraint shall be capable of supporting 4 times the intended load.

3. Restraint protection shall be rigged to allow the movement of employees only as far as the sides of the working level or working area.

Note: All safety belts, harnesses and lanyards placed in service or purchased on or before February 1, 1997, shall be labeled as meeting the requirements contained in ANSI A10.14-1975, Requirements for Safety Belts, Harnesses, Lanyards, Lifelines and Drop Lines for Construction and Industrial Use.

All personal fall arrest, personal fall restraint and positioning device systems purchased or placed in service after February 1, 1997, shall be labeled as meeting the requirements contained in ANSI A10.14-1991 American National Standard for Construction and Demolition Use, or ANSI Z359.1-1992 American National Standard Safety Requirements for Personal Fall Arrest Systems, Subsystems and Components.

Electrical Safety & Lock-out / Tag-out Program

PNT Consulting LCC has developed the following procedures to protect our employees and reduce the risk of accidents. We will also conduct a periodic review of electrical safety, energy control procedures, and lock-out / tag-out, at least annually, to ensure that the procedure and the requirements of this section are being followed.

This procedure is binding upon all employees. All employees will be instructed in the significance of electrical safety, energy control procedures, and lock-out / tag-out. Each new employee shall be instructed by their Supervisor in the purpose and use of these procedures.

All Equipment and Installations

1. Only trained, qualified, and authorized employees will be allowed to make electrical repairs or work on electrical equipment or installations.

2. All electrical equipment and systems shall be treated as energized until tested or otherwise proven to be de-energized.

3. All energized equipment and installations will be de-energized prior to the commencement of any work. If the equipment or installation must be energized for test or other purposes, special precautions will be taken to protect against the hazards of electric shock.

4. All equipment shall be locked out to protect against accidental or inadvertent operation when such operation could cause injury to personnel. Do not attempt to operate any switch, valve, or other energy-isolating device bearing a lock.

5. Safety grounds shall always be used where there is a danger of shock from back feeding or other hazards.

6. Polyester clothing or other flammable types of clothing shall not be worn near electrical circuits. Cotton clothing is much less likely to ignite from arc blast. Employees working on live circuits shall be provided Nomex or equivalent fire resistant clothing.

7. Suitable eye protection must be worn at all times while working on electrical equipment.

8. Always exercise caution when energizing electrical equipment or installations. Take steps to protect employees from arc blast and exploding equipment in the event of a fault.

9. All power tools will be grounded or double insulated. Tools with defective cords or wiring shall not be used.

10. Suitable temporary barriers or barricades shall be installed when access to open enclosures containing exposed energized equipment is not under the control of an authorized person.

Energized Equipment or Systems

Work shall not be performed on exposed energized parts of equipment or systems until the following conditions are met:
Work shall not be performed on exposed energized parts of equipment or systems until the following conditions are met:

1. Responsible supervision has determined that the work is to be performed while the equipment or systems are energized.

2. All work is conducted in accordance with the requirements of NFPA Standard 70E for Electrical Safety.

3. Involved personnel have received instructions on the work techniques and hazards involved in working on energized equipment and appropriate equipment to perform the job has been provided.

4. Suitable personal protective equipment has been provided and is used. Suitable insulated gloves shall be worn for voltages in excess of 300 volts, nominal.

5. Suitable eye protection, including face shield and safety glasses or goggles, has been provided and is used.

6. Suitable Arc Flash and Arc Blast protection is provided for high voltage work.

7. Fire resistant clothing such as Nomex suits are worn.

8. Where required, suitable barriers, barricades, tags, or signs are in place for personnel protection.

After the required work on an energized system or equipment has been completed, an authorized person shall be responsible for:

1. Removing from the work area any personnel and protective equipment.

2. Reinstalling all permanent barriers or covers.



Model Calosha Lipp Template

De-energized Equipment or Systems

A qualified person shall be responsible for completing the following **before** working on de-energized electrical equipment or systems, unless the equipment is physically removed from the wiring system:

1. Notifying all involved personnel.

2. Locking the disconnecting means in the "open" position with the use of lockable devices, such as padlocks, combination locks or disconnecting of the conductor(s) or other positive methods or procedures which will effectively prevent unexpected or inadvertent energizing of a designated circuit, equipment or appliance.

3. Tagging the disconnecting means with suitable accident prevention tags.

4. Effectively blocking the operation or dissipating the energy of all stored energy devices which present a hazard, such as capacitors or pneumatic, spring-loaded and like mechanisms. This may require the installation of safety grounds.

5. Testing the equipment to ensure it is de-energized.

Energizing (or Re-energizing) Equipment or Systems

A qualified and authorized person shall be responsible for completing the following before energizing equipment or systems that have been de-energized:

1. Determining that all persons are clear from hazards which might result from the equipment or systems being energized including arc blast or explosions caused by unexpected faults.

2. Removing locking devices and tags. Only the employee who placed them may remove locking devices and tags. Locking devices and tags shall be removed upon completion of the work and after the installation of the protective guards and/or safety interlock systems.

Accident Prevention Tags

Suitable accident prevention tags shall be used to control a specific hazard. Such tags shall provide the following minimum information:

1. Reason for placing tag.

2. Name of person placing the tag and how that person may be contacted.

3. Date tag was placed.

Lock-out / Tag-out

Machinery or equipment capable of **movement** shall be stopped and the power source de-energized or disengaged, and locked out. If necessary, the moveable parts shall be mechanically blocked or secured to prevent inadvertent movement during cleaning, servicing or adjusting operations unless the machinery or equipment must be capable of movement during this period in order to perform the specific task. If so, the hazard of movement shall be minimized.

Equipment or power driven machines equipped with lockable controls, or readily adaptable to lockable controls, shall be locked out or positively sealed in the "off" position during repair work and setting-up operations. In all cases, accident prevention signs and/or tags shall be placed on the controls of the equipment or machines during repair work.

PNT Consulting LLC will provide a sufficient number of accident prevention signs or tags and padlocks, seals or other similarly effective means that may be required by any reasonably foreseeable repair.

Sequence of Lockout Procedure

1. Notify all affected employees that a lockout is required and the reason therefore.

2. If the equipment is operating, shut it down by the normal stopping procedure (such as: depress stop button, open toggle switch).

3. Operate the switch, valve, or other energy isolating devices so that the energy source(s) (electrical, mechanical, hydraulic, other) is disconnected or isolated from the equipment.

4. Stored energy, such as that in capacitors, springs, elevated machine members, rotating fly wheels, hydraulic systems, and air, gas, steam or water pressure, must also be dissipated or restrained by methods such as grounding, repositioning, blocking, bleeding down.

5. Lockout energy isolating devices with an assigned individual lock.

6. After ensuring that no personnel are exposed and as a check on having disconnected the energy sources, operate the push button or other normal operating controls to make certain the equipment will not operate. CAUTION: Return operating controls to neutral position after the test.

Procedure Involving More Than One Person

If more than one individual is required to lock out equipment, each shall place his/her own personal lock on the energy isolating device(s). One designated individual of a work crew or a Supervisor, with the knowledge of the crew, may lock out equipment for the whole crew. In such cases, it may be the responsibility of the individual to carry out all steps of the lockout procedure and inform the crew when it is safe to work on the equipment. Additionally, the designated individual shall not remove a crew lock until it has been verified that all individuals are clear.

Testing Equipment During Lockout

In many maintenance and repair operations, machinery may need to be tested, and for that purpose energized, before additional maintenance work can be performed. This procedure must be followed:

1. Clear all personnel to safety.

2. Clear away tools and materials from equipment.

3. Remove lockout devices and re-energize systems, following the established safe procedure.

4. Proceed with tryout or test.

5. Neutralize all energy sources once again, purge all systems, and lockout prior to continuing work.

Equipment design and performance limitations may dictate that effective alternative worker protection be provided when the established lock-out procedure is not feasible.

Restoring Equipment to Service

After the work is completed and the equipment is ready to be returned to normal operation, this procedure must be followed:

1. Remove all non-essential items.

2. See that all equipment components are operationally intact, including guards and safety devices. Repair or replace defective guards before removing lockouts.

3. Remove each lockout device using the correct removal sequence.

4. Make a visual check before restoring energy to ensure that everyone is physically clear of the equipment.

Fleet & Driving Safety

PNT Consulting LLC has established the following guidelines and procedures for our drivers and vehicles to protect the safety of individuals operating any motor vehicle on company business. Protecting our employee drivers, their passengers, and the public is of the highest priority. The commitment of management and employees is critical to the success of this program. Clear communication of, and strict adherence to, the program's guidelines and procedures are essential.

Our primary goal is to maintain a high level of safety awareness and foster responsible driving behavior. Driver safety awareness and responsible driving behavior will significantly decrease the frequency of motor vehicle accidents and reduce the severity of personal injuries and property damage.

Drivers must follow the requirements outlined in this program. Violations of this program may result in disciplinary action up to, and including, suspension of driving privileges or dismissal.

Our program consists of the following elements:

- Driver selection
- Driver training
- Vehicle use policy
- Vehicle inspection & preventive maintenance
- Accident investigation

Driver Selection

Only company authorized and assigned employees are allowed to drive company vehicles at any time. Prior to being authorized and assigned, PNT Consulting LLC will check the following items. Drivers must have:

- A valid un-restricted drivers license.
- A current MVR driving record with no more than 2 points and no serious or major violations.

PNT Consulting LLC will also check driving records of all employees authorized to drive on company business on an annual basis.

Employees that do not meet these requirements are not authorized or allowed to drive company vehicles or drive their own vehicle on company business.

Driver Training

All employees driving company vehicles, and personal vehicles on company business, will be given a copy of the Driving Safety Rules and Company Vehicle Use Policy and required to read and sign for them. Safe driving will also be periodically covered at company safety meetings.

Company Vehicle Use Policy

PNT Consulting LLC has established the following policies pertaining to company vehicles:

PNT Consulting LLC has established the following policies pertaining to company vehicles:

1. Personal and off duty use of PNT Consulting LLC vehicles is prohibited.

2. Only authorized employees may drive PNT Consulting LLC vehicles. No other family members may drive company vehicles.

3. Non-employee passengers are not permitted in PNT Consulting LLC vehicles at any time, unless they are business related.

4. Seat belts must be worn in PNT Consulting LLC vehicles at all times.

5. No employee is permitted to drive PNT Consulting LLC vehicles while impaired by alcohol, illegal or prescription drugs, or over the counter medications.

6. Employees shall not engage in any activities that distract them from driving while operating vehicles. This includes eating, reading maps, texting, looking for reports or files and talking on a cell phone without a hands free device.

7. All accidents involving PNT Consulting LLC vehicles must be reported to the office immediately.

8. Employees with two or more preventable accidents in a three year period, or that obtain three points on their driving record, will be subject to a loss of their driving privileges or have their driving privileges restricted.

Vehicle Inspection & Preventive Maintenance

All PNT Consulting LLLC vehicles must be inspected by the driver prior to each use. Mechanical defects will be repaired immediately. Paul B Harvey, Chief Operations Officers will periodically spot check company vehicles to determine their condition.

Vehicle inspections will include:

- Lights
- Turn signals
- Emergency flashers
- Tires
- Horn
- Brakes
- Fluids
- Windshield condition and wiper condition
- Mirrors

All vehicles will also be maintained in accordance with the manufacturers' recommendations. It is the responsibility of the individual assigned the vehicle to ensure proper maintenance and repairs are performed. If your vehicle is not safe, do not drive.

Accident Investigation

All accidents in PNT Consulting LLC vehicles will be investigated by the Supervisor, Manager and / or Paul B Harvey. Where possible, witness's statements will be obtained and photos used to document the scene of the accident and the damage. Police reports will also be obtained whenever possible. The following guidelines will be used to help determine preventability.

Auto Accident Preventability Guide

This guide will assist in determining whether our driver could have prevented the accident. An accident is preventable if the driver could have done something to avoid it. Drivers are expected to drive defensively. Which driver was primarily at fault, which received a traffic citation, or whether a claim was paid has no bearing on preventability. If there was anything our driver could have done to avoid the collision, then the accident was preventable.

An accident was non preventable when the vehicle was legally and properly parked, or when properly stopped because of a highway patrol officer, a signal, stop sign, or traffic condition. When judging accident preventability, here are some general questions to consider:

1. Does the investigation indicate that the driver considers the rights of others, or is there evidence of poor driving habits that need to be changed?

2. Does the investigation indicate driver awareness? Such phrases as "I did not see," "I didn't think," "I didn't expect," or "I thought" are signals indicating there probably was a

lack of awareness, and the accident was preventable. An aware driver should think, expect, and see hazardous situations in time to avoid collisions.

3. Was the driver under any physical stresses that could have been contributory? Did the accident happen near the end of a long day or long drive? Did overeating contribute to fatigue? Did the driver get prior sufficient sleep? Is the driver's vision faulty? Was the driver feeling ill?

4. Was the vehicle defective without the driver's knowledge? Was a pre-trip inspection done, and would it have discovered the defect? A car that pulls to the left or right when the driver applies the brakes, faulty windshield wipers, and similar items are excuses, and a driver using them is trying to evade responsibility. Sudden brake failure, loss of steering, or a blowout might be defects beyond the driver's ability to predict. However, pre-trip inspections and regularly scheduled maintenance should prevent most of these problems. If either of these are the cause of the accident, then the accident was probably preventable by the driver.

5. Could the driver have exercised better judgment by taking an alternate route through less congested areas to reduce the hazardous situations encountered?

6. Could the driver have done anything to avoid the accident?

7. Was the driver's speed safe for conditions?

8. Did the driver obey all traffic signals?

9. Was the driver's vehicle under control?

Intersection Collisions

Failure of our driver to yield the right-of-way, regardless of who has the right of way, as indicated by stop signs or lights, is preventable. The only exception to this is when the driver is properly proceeding through an intersection protected by lights or stop signs and the driver's vehicle is struck in the extreme rear side of the vehicle. Regardless of stop signs, stoplights, or right-of-way, a defensive driver recognizes that the right-of-way belongs to anyone who assumes it and should yield accordingly.

Questions to consider:

1. Did the driver approach the intersection at a speed safe for conditions?
2. Was the driver prepared to stop before entering the intersection?
3. At a blind corner, did the driver pull out slowly, ready to apply the brakes?
4. Did the driver look both ways before proceeding through the intersection?

Sideswipes

Sideswipes are often preventable. Defensive drivers do not get into a position where they can be forced into another vehicle or another vehicle can be forced into them. Defensive drivers continuously check for escape routes to avoid sideswipes. For two lane roads, this means a driver should pass another vehicle only when absolutely certain that he or she can safely complete the pass. A driver should also be ready to slow down and let a passing vehicle that has failed to judge safe passing distance back into the lane. A driver should make no sudden moves that may force another vehicle to swerve. If a driver sideswipes a stationary object while taking evasive action to avoid striking another car or a pedestrian, such an accident may not be preventable. However, you should consider what the driver could have done or failed to do immediately preceding the evasive action to be in the position of no other options.

A driver is also expected to anticipate the actions of an oncoming vehicle. Sideswiping an oncoming vehicle is often preventable. Again, evasive action, including leaving the roadway, may be necessary if an oncoming vehicle crosses into the driver's lane. Drivers are expected to allow merging vehicles to merge smoothly with them, and to merge smoothly on controlled access highways. Drivers are expected to be able to gauge distances properly when leaving a parking place and enter traffic smoothly.

Questions to consider:

1. Did the driver look to front and rear for approaching and overtaking traffic immediately before starting to pull away from the curb?
2. Did the driver signal before pulling away from the curb?
3. Did the driver look back rather than depend only upon rear-view mirrors?
4. Did the driver start into traffic only when this action would not require traffic to change its speed or direction in order to avoid his or her vehicle?

Head-on Collisions

A head-on collision with a vehicle traveling in the wrong lane may be preventable if the driver could have pulled off the road or taken other evasive action to prevent a collision. However, the driver should never drive into the other lane to avoid the oncoming vehicle. If the driver swerved off the road to avoid a head-on collision, the accident is non-preventable. The driver in this case made a good defensive driving decision, taking the lesser of two evils.

Many skidding conditions are caused by rain, freezing rain, fog, and snow, which all increase the hazard of travel. Oily road film, which builds up during a period of good weather, causes an especially treacherous condition during the first minutes of a rainfall. Loss of traction can be anticipated, and these accidents usually are preventable. Driving too fast for conditions is the most common reason why these types of accidents are preventable.

Questions to consider:

1. Was the driver operating at a safe speed considering weather and road conditions?
2. During inclement weather, was the driver keeping at least twice the safe following distance used for dry pavement?
3. Were all actions gradual?
4. Was the driver anticipating ice on bridges, in gutter, ruts, and near the curb?
5. Was the driver alert for water, ice or snow in shaded areas, loose gravel, sand, ruts, etc?

If a driver goes off the road or strikes another vehicle because of skidding, the accident is preventable.

Pedestrian Accidents

All types of pedestrian accidents, including collisions with pedestrians coming from between parked cars, are usually considered preventable. There are few instances where the action of pedestrians is so unreasonable that the operator could not be expected to anticipate such an occurrence.

Questions to consider:

1. Did the driver go through congested areas expecting that pedestrians would step in front of the vehicle?
2. Was the driver prepared to stop?
3. Did the driver keep as much clearance between his or her vehicle and parked vehicles, as safety permitted?
4. Did the driver stop when other vehicles had stopped to allow pedestrians to cross?
5. Did the driver wait for the green light or stop for the caution light?
6. Was the driver aware of children and prepared to stop if one ran into the street?
7. Did the driver give all pedestrians the right-of-way?
8. Did the driver stop for a school bus that was stopped and properly signaling that passengers were loading or unloading?

Backing Accidents

Backing a vehicle into another vehicle, an overhead obstruction, or a stationary object is normally preventable. The fact that someone was directing the driver in backing does not relieve the driver of the responsibility to back safely.

Questions to consider:

1. Was it necessary to back?
2. Did the driver plan ahead so that he or she could have pulled forward out of the parking space instead of backing?
3. Was it necessary to drive into the narrow street, dead-end alley, or driveway from which he or she backed?
4. If the driver could not see where he or she was backing: Did the driver try to get someone to guide him or her?
5. Did the driver look all around the vehicle before backing? Did the driver back immediately after looking?
6. Did the driver use the horn while backing? Were the back-up lights working?
7. Did the driver look to the rear without relying totally on the rear-view mirror?
8. If the distance was long, did the driver stop, get out, and look around occasionally?
9. Did the driver back slowly?
10. Did the driver judge clearances accurately?

Parking Accidents

Doors on our driver's parked vehicle that are damaged when opened on the traffic side are considered preventable accidents. The driver is responsible to see that the traffic side is clear of traffic, before any doors on that side are opened.

In most cases, if our driver, while driving, strikes a parked vehicle's opening door it is considered preventable. Usually our driver can see from a sufficient distance that the parked vehicle is occupied, and should therefore, be prepared to stop, should move closer to the center line or change lanes.

It is a driver's responsibility to park the vehicle so that it will remain stationary. A runaway type accident is preventable and blaming such a collision on defective parking brakes or other holding devices are inadequate excuses. A good pre-trip inspection, and maintenance program will eliminate most opportunities for this type of accident being the result of mechanical failure.

Accidents occurring when vehicles are properly and legally parked are considered non preventable. Accidents occurring while the vehicle was double-parked or in a "No Parking" zone are preventable.

Questions to consider:

1. Was the vehicle parked on the proper side of the road?
2. Was it necessary to park there or was there a safer, only slightly less convenient place nearby?
3. Did the driver have to park on the traveled part of the highway, on the curve, or on the hill?
4. When required, did the driver warn traffic by emergency warning devices?
5. Did the driver park parallel to the curb?
6. Was it necessary to park so close to an alley or directly across from a driveway?

Collision With Obstructions

Obstructions can be avoided if the driver knows the height and width of the vehicle, pays attention to posted clearances, and takes the time to properly judge clearances.

Cargo Accidents

The accident should be considered preventable if the investigation shows a mechanical defect of which the driver was aware, a defect the driver should have found by inspecting the vehicle, or the driver caused the accident by rough and abusive handling. It is a driver's responsibility to secure cargo properly to prevent shifting, loss, or damage. Cargo should be safely stowed to prevent flying objects that can strike or distract the driver.

Confined Space Operations

Occasionally in our work, we may encounter confined spaces. Confined space work requires special safety precautions to ensure that employees are not overcome by dangerous air contaminants or oxygen deficiency. In some cases, there may be fire or explosion hazards in confined spaces that do not exist in open areas. Many workers have been killed or seriously injured in confined spaces. To avoid this, PNT Consulting LLC employees must adhere to the following rules. This section prescribes **minimum** standards for preventing employee exposure to dangerous air contamination and/or oxygen deficiency in confined spaces. In some cases, extra precautions may be necessary. As always, if you are unsure, ask for assistance.

Definitions

A **confined space** has the following properties:

1. Existing ventilation is insufficient to remove dangerous air contamination and/or oxygen deficiency that may exist or develop.

2. Ready access or egress for the removal of a suddenly disabled employee is difficult due to the location and/or size of the opening(s).

3. The area is not designed for continuous human occupancy.

Dangerous air contamination means an atmosphere presenting a threat of causing death, injury, acute illness, or disablement due to the presence of flammable and/or explosive, toxic, or otherwise injurious or incapacitating substances.

Dangerous air contamination due to the **flammability** of a gas or vapor is defined as an atmosphere containing the gas or vapor at a concentration greater than 20 percent of its lower explosive (lower flammable) limit.

Dangerous air contamination due to a **combustible particulate** is defined as a concentration greater than 20 percent of the minimum explosive concentration of the particulate.

Dangerous air contamination due to the **toxicity** of a substance is defined as the atmospheric concentration immediately hazardous to life or health. This definition of dangerous air contamination due to the toxicity of a substance does not preclude the requirement to control harmful exposures to toxic substances at concentrations less than those immediately hazardous to life or health.

Oxygen deficiency. An atmosphere containing oxygen at a concentration of less than 19.5 percent by volume.

Oxygen rich. An atmosphere containing oxygen at a concentration of more than 22 percent by volume. This creates additional fire hazards.

Typical Confined Spaces:

- Vaults
- Pits
- Tubs
- Vats
- Ducts
- Boilers
- Silos
- Sewers
- Compartments

Prior to Confined Space Entry:

1. Written, understandable operating and rescue procedures shall be developed and shall be provided to affected employees. The operating procedures shall include provision for the surveillance of the surrounding area to avoid hazards such as drifting vapors from tanks, piping and sewers.

2. All employees, including standby persons if needed, will be trained in the operating and rescue procedures, including instructions as to the hazards they may encounter.

3. Any lines, pipes or hoses which may convey flammable, injurious, or incapacitating substances into the space shall be disconnected, blinded, or blocked off by other positive means to prevent the development of dangerous air contamination and/or oxygen deficiency within the space. The disconnection or blind shall be so located or done in such a manner that inadvertent reconnection of the line or removal of the blind are effectively prevented.

4. The space shall be emptied, flushed, or otherwise purged of flammable, injurious or incapacitating substances to the extent feasible.

5. The air shall be tested with an appropriate device or method to determine whether dangerous air contamination and/or an oxygen deficiency exists and a written record of such testing results shall be made and kept at the work site for the duration of the work. Affected employees and/or their representative shall be afforded an opportunity to review and record the testing results.

6. Where interconnected spaces are blinded off as a unit, each space shall be tested and the results recorded. The most hazardous condition found shall govern the entry procedures to be followed.

Confined Space Entry if Tests Show No Hazard

If dangerous air contamination and/or oxygen deficiency does not exist within the space, as demonstrated by tests performed in accordance with the pre-entry procedures, entry into and work within the space may proceed subject to the following provisions:

1. Air testing, in accordance with the pre-entry procedures, shall be conducted with sufficient frequency to ensure that the development of dangerous air contamination and/or oxygen deficiency does not occur during the performance of any operation.

2. Work stops, employees exit, and additional precautions are taken if dangerous air contamination and/or oxygen deficiency does develop.

Confined Space Entry if Tests Show Hazards are Present or are Likely to Develop

Where the existence of dangerous air contamination and/or oxygen deficiency is demonstrated by tests performed in accordance with the pre-entry procedures or if the development of dangerous air contamination and/or an oxygen deficiency is imminent, the following requirements shall also apply:

1. Existing ventilation shall be augmented by appropriate means.

2. When additional ventilation has removed dangerous air contamination and/or oxygen deficiency as demonstrated by additional testing conducted (and recorded), entry into and work within the space may proceed.

3. No source of ignition shall be introduced until the implementation of appropriate provisions of this section have ensured that dangerous air contamination due to flammable and/or explosive substances does not exist.

4. Whenever oxygen-consuming equipment such as welding torches, furnaces and the like are to be used, measures shall be taken to ensure adequate combustion air and exhaust gas venting.

5. To the extent feasible, provision shall be made to permit ready entry and exit.

6. Where it is not feasible to provide for ready exit from spaces equipped with automatic fire suppression systems employing harmful design concentrations of toxic or oxygen-displacing gases, or total foam flooding, such systems shall be deactivated. Where it is not practical or safe to deactivate such systems, the use of respiratory protective equipment, such as SCBA, shall apply during entry into and work within such spaces.

Model Calosha Lipp Template

Confined Spaces Where Dangerous Air Contamination Cannot be Removed by Ventilation

It is the policy of PNT Consulting LLC to only work in a confined space if it can be made safe by the means listed above. We will not work in confined spaces where there is an ongoing hazard of air contamination or oxygen deficiency. These operations require extra measures and precautions beyond our immediate ability to perform. If such work does become necessary, a separate program will be developed.

Respiratory Protection

Occasionally our work may necessitate the use of respirators to protect against air contaminants. Due to the limitations of respirators and their uncomfortable nature, PNT Consulting LLC will make every effort to provide other means of protection, such as local exhaust ventilation, or substitution of less hazardous material, prior to requiring employees to wear them.

When it is clearly impractical to remove harmful dusts, fumes, mists, vapors, or gases at their source, or where emergency protection against occasional and/or relatively brief exposure is needed, PNT Consulting LLC will provide, and the employee exposed to such hazard shall use, approved respiratory equipment.

Whenever respirators are required to be used to control harmful exposures, only respiratory equipment approved for that purpose shall be used and such equipment shall be approved by the National Institute for Occupational Safety and Health (NIOSH). Only parts approved for the specific respirator system shall be used for replacement.

General Respiratory Protection Guidelines:

1. Atmospheric contamination will be prevented wherever feasible through engineering controls such as enclosure or confinement of the operation, general and local exhaust ventilation, or substitution of less toxic materials. When effective engineering controls are not feasible, or while they are being instituted, appropriate respirators shall be used.

2. PNT Consulting LLC shall identify and evaluate the respiratory hazard(s) in the workplace; this evaluation shall include a reasonable estimate of employee exposures to respiratory hazard(s) and an identification of the contaminant's chemical state and physical form. Where we cannot identify or reasonably estimate the employee exposure, the atmosphere shall be considered to be immediately dangerous to life or health (IDLH).

3. Respirators shall be provided when such equipment is necessary to protect the health of the employee.

4. Only NIOSH-certified respirators shall be used. The respirator shall be used in compliance with the conditions of its certification.

5. PNT Consulting LLC will provide respirators that are applicable and suitable for the purpose intended. We shall select and provide an appropriate respirator based on the respiratory hazard(s) to which the worker is exposed and workplace and user factors that affect respirator performance and reliability.

6. Respirators shall be selected from a sufficient number of respirator models and sizes so that the respirator is acceptable to, and correctly fits, the user.

7. Paul B Harvey, Chief Operations Officer shall act as the Program Administrator who is qualified by appropriate training or experience that is commensurate with the complexity of the program to administer or oversee the respiratory protection program and conduct the required evaluations of program effectiveness.

8. PNT Consulting LLC will provide respirators, training, and medical evaluations at no cost to the employee.

9. PNT Consulting LLC will provide a medical evaluation to determine the employee's ability to use a respirator, before the employee is fit tested or required to use the respirator in the workplace. We may discontinue an employee's medical evaluations when the employee is no longer required to use a respirator.

10. PNT Consulting LLC will ensure that employees using a tight-fitting face piece respirator pass an appropriate qualitative fit test (QLFT) or quantitative fit test (QNFT).

11. PNT Consulting LLC will establish and implement procedures for the proper use of respirators. These requirements include prohibiting conditions that may result in face piece seal leakage, preventing employees from removing respirators in hazardous environments, taking actions to ensure continued effective respirator operation throughout the work shift, and establishing procedures for the use of respirators in IDLH atmospheres.

12. We shall provide each respirator user with a respirator that is clean, sanitary, and in good working order. The Supervisor or Manager shall ensure that respirators are cleaned and disinfected.

13. All filters, cartridges and canisters used in the workplace must be legibly labeled and color-coded with the NIOSH approval label that must not be removed.

14. Training and information will be provided to employees who are required to use respirators. The training will be comprehensive, understandable, and recur annually, or more often if necessary.

15. Paul B Harvey, Chief Operations Officer shall conduct evaluations of the workplace to ensure that the written respiratory protection program is being properly implemented, and to consult with employees to ensure that they are using the respirators properly.

16. Written information regarding medical evaluations, fit testing, and the respirator program shall be retained indefinitely. This information will facilitate employee involvement in the

respirator program, assist us in auditing the adequacy of the program, and provide a record for compliance determinations by OSHA.

17. Where respirator use is not required by a particular standard or hazard, PNT Consulting LLC may provide respirators at the request of employees or permit employees to use their own respirators, if we determine that such respirator use will not in itself create a hazard. If voluntary respirator use is permissible, we shall provide the respirator users with the information contained in Appendix D of section 5144 8CCR.("Information for Employees Using Respirators When Not Required Under the Standard. If employees choose to wear a dust mask, no medical evaluation or further training will be required. If they request to wear a respirator, even though it is not required, they will be included in the standard medical screening, fit testing and training program.

Respirator Selection Requirements

The proper respirator for the job and hazard shall be selected. This selection will be made in accordance with Cal/OSHA or ANSI Z88.2-1980 standards. The correct respirator shall be specified for each job. The individual issuing them shall be adequately instructed to insure that the correct respirator is used.

The manufacturers' recommendations and literature will also be reviewed to determine if the respirator provides protection against the expected contaminants. For instance, dust masks do not provide protection against gasses or vapors.

Paul B Harvey,Chief Operations Officer or another qualified individual shall review and approve all breathing air compressors and installations for compliance with appropriate OSHA regulations and safety procedures prior to use.

Respirators for IDLH atmospheres.

We shall provide the following respirators for employee use in IDLH atmospheres:

- A full face-piece pressure demand SCBA certified by NIOSH for a minimum service life of thirty minutes, or
- A combination full face-piece pressure demand supplied-air respirator (SAR) with auxiliary self-contained air supply.
- Respirators provided only for escape from IDLH atmospheres shall be NIOSH-certified for escape from the atmosphere in which they will be used.
- All oxygen-deficient atmospheres shall be considered IDLH.

Respirators for atmospheres that are not IDLH.

PNT Consulting LLC shall provide a respirator that is adequate to protect the health of the employee and ensure compliance with all other OSHA statutory and regulatory

requirements, under routine and reasonably foreseeable emergency situations. The respirator selected shall be appropriate for the chemical state and physical form of the contaminant.

For protection against gases and vapors:

- An atmosphere-supplying respirator, or
- An air-purifying respirator, provided that the respirator is equipped with an end-of-service-life indicator (ESLI) certified by NIOSH for the contaminant; or if there is no ESLI appropriate for conditions in the workplace, we will implement a change schedule for canisters and cartridges that is based on objective information or data that will ensure that canisters and cartridges are changed before the end of their service life.

For protection against particulates:

- An atmosphere-supplying respirator; or
- An air-purifying respirator equipped with a filter certified by NIOSH under 30 CFR part 11 as a high efficiency particulate air (HEPA) filter, or an air-purifying respirator equipped with a filter certified for particulates by NIOSH under 42 CFR part 84; or
- For contaminants consisting primarily of particles with mass median aerodynamic diameters (MMAD) of at least 2 micrometers, an air-purifying respirator equipped with any filter certified for particulates by NIOSH.

Medical Evaluation Procedures

1. Employees shall not be assigned to tasks requiring the use of respirators unless it has been determined that they are physically able to perform the work while using the required respiratory equipment.

2. PNT Consulting LLC shall identify a physician or other licensed health care professional (PLHCP) to perform medical evaluations.

3. The medical evaluation shall include any medical tests, consultations, or diagnostic procedures that the PLHCP deems necessary to make a final determination.

4. Medical questionnaires and examinations shall be administered confidentially during the employee's normal working hours or at a time and place convenient to the employee.

5. The employee shall have an opportunity to discuss the examination results with the PLHCP.

6. The following information must be provided to the PLHCP before the PLHCP makes a recommendation concerning an employee's ability to use a respirator:

- The type and weight of the respirator to be used by the employee;
- The duration and frequency of respirator use (including use for rescue and escape);
- The expected physical work effort;
- Additional protective clothing and equipment to be worn; and
- Temperature and humidity extremes that may be encountered.

7. PNT Consulting LLC shall provide the PLHCP with a copy of this written respiratory protection program and a copy of the OSHA regulations if they do not already have them.

8. In determining the employee's ability to use a respirator, PNT Consulting LLC shall obtain a written recommendation regarding the employee's ability to use the respirator from the PLHCP. The recommendation shall provide only the following information:

    - Any limitations on respirator use related to the medical condition of the employee, or relating to the workplace conditions in which the respirator will be used, including whether or not the employee is medically able to use the respirator;
    - The need, if any, for follow-up medical evaluations; and
    - A statement that the PLHCP has provided the employee with a copy of the PLHCP's written recommendation.

9. If the respirator is a negative pressure respirator and the PLHCP finds a medical condition that may place the employee's health at increased risk if the respirator is used, PNT Consulting LLC shall provide a powered air purifying respirator (PAPR) if the PLHCP's medical evaluation finds that the employee can use such a respirator; if a subsequent medical evaluation finds that the employee is medically able to use a negative pressure respirator, then we are no longer required to provide a PAPR.

10. PNT Consulting LLC shall provide additional medical evaluations that comply with the requirements of this section if:

    - An employee reports medical signs or symptoms that are related to ability to use a respirator;
    - A PLHCP, supervisor, or the respirator program administrator informs the employer that an employee needs to be reevaluated;
    - Information from the respiratory protection program, including observations made during fit testing and program evaluation, indicates a need for employee reevaluation; or
    - A change occurs in workplace conditions (e.g., physical work effort, protective clothing, temperature) that may result in a substantial increase in the physiological burden placed on an employee.

Fit Testing

1. PNT Consulting LLC shall ensure that an employee using a tight-fitting face-piece respirator is fit tested prior to initial use of the respirator, whenever a different respirator face-piece (size, style, model or make) is used, and at least annually thereafter.

2. We shall conduct an additional fit test whenever the employee reports, or the employer, PLHCP, supervisor, or program administrator makes visual observations of, changes in the employee's physical condition that could affect respirator fit. Such conditions include, but are not limited to, facial scarring, dental changes, cosmetic surgery, or an obvious change in body weight.

3. If after passing a QLFT or QNFT, the employee subsequently notifies the program administrator, supervisor, or PLHCP that the fit of the respirator is unacceptable, the employee shall be given a reasonable opportunity to select a different respirator face-piece and to be retested.

4. The fit test shall be administered using an OSHA-accepted QLFT or QNFT protocol.

Usage Rules

1. PNT Consulting LLC shall not permit respirators with tight-fitting facepieces to be worn by employees who have:

    - Facial hair that comes between the sealing surface of the face-piece and the face or that interferes with valve function; or
    - Any condition that interferes with the face-to-face-piece seal or valve function.

2. If an employee wears corrective glasses or goggles or other personal protective equipment, we shall ensure that such equipment is worn in a manner that does not interfere with the seal of the face-piece to the face of the user.

3. For all tight-fitting respirators, we shall ensure that employees perform a user seal check each time they put on the respirator.

4. Appropriate surveillance shall be maintained of work area conditions and degree of employee exposure or stress. When there is a change in work area conditions or degree of employee exposure or stress that may affect respirator effectiveness, we shall reevaluate the continued effectiveness of the respirator.

5. Respiratory equipment shall not be passed on from one person to another until it has been cleaned and sanitized. Respirators individually assigned should be marked to

indicate to whom it was assigned. This mark shall not affect the respirator performance in any way. The date of issuance should be recorded.

6. When not in use, respirators shall be stored to protect against dust, sunlight, extreme temperatures, excessive moisture, or damaging chemicals. Plastic zip lock bags are suitable for storage.

7. PNT Consulting LLC shall ensure that employees leave the respirator use area:

   - To wash their faces and respirator face-pieces as necessary to prevent eye or skin irritation associated with respirator use; or
   - If they detect vapor or gas breakthrough, changes in breathing resistance, or leakage of the face-piece; or
   - To replace the respirator or the filter, cartridge, or canister elements.

8. If the employee detects vapor or gas breakthrough, changes in breathing resistance, or leakage of the face-piece, we will replace or repair the respirator before allowing the employee to return to the work area.

9. For all IDLH atmospheres, PNT Consulting LLC shall ensure that:

   - One employee or, when needed, more than one employee is located outside the IDLH atmosphere;
   - Visual, voice, or signal line communication is maintained between the employee(s) in the IDLH atmosphere and the employee(s) located outside the IDLH atmosphere;
   - The employee(s) located outside the IDLH atmosphere are trained and equipped to provide effective emergency rescue;
   - The Supervisor or designee is notified before the employee(s) located outside the IDLH atmosphere enter the IDLH atmosphere to provide emergency rescue;
   - The Supervisor or designee authorized to do so by PNT Consulting LLC, once notified, provides necessary assistance appropriate to the situation;
   - Employee(s) located outside the IDLH atmospheres are equipped with pressure demand or other positive pressure SCBAs, or a pressure demand or other positive pressure supplied-air respirator with auxiliary SCBA; and either appropriate retrieval equipment for removing the employee(s) who enter(s) these hazardous atmospheres where retrieval equipment would contribute to the rescue of the employee(s) and would not increase the overall risk resulting from entry; or equivalent means for rescue where retrieval equipment is not required.

Maintenance, Inspection and Care of Respirators.

1. The employer shall ensure that respirators are cleaned and disinfected using procedures recommended by the respirator manufacturer, provided that such

procedures are of equivalent effectiveness to OSHA regulations. The respirators shall be cleaned and disinfected at the following intervals:

- Respirators issued for the exclusive use of an employee shall be cleaned and disinfected as often as necessary to be maintained in a sanitary condition;
- Respirators issued to more than one employee shall be cleaned and disinfected before being worn by different individuals;
- Respirators maintained for emergency use shall be cleaned and disinfected after each use; and
- Respirators used in fit testing and training shall be cleaned and disinfected after each use.

2. All respirators shall be stored to protect them from damage, contamination, dust, sunlight, extreme temperatures, excessive moisture, and damaging chemicals, and they shall be packed or stored to prevent deformation of the facepiece and exhalation valve.

3. Emergency respirators shall be:

   - Kept accessible to the work area;
   - Stored in compartments or in covers that are clearly marked as containing emergency respirators; and
   - Stored in accordance with any applicable manufacturer instructions.

4. All respirators used in routine situations shall be inspected before each use and during cleaning;

5. All respirators maintained for use in emergency situations shall be inspected at least monthly and in accordance with the manufacturer's recommendations, and shall be checked for proper function before and after each use; and

6. Emergency escape-only respirators shall be inspected before being carried into the workplace for use.

7. PNT Consulting LLC shall ensure that respirator inspections include the following:

   - A check of respirator function, tightness of connections, and the condition of the various parts including, but not limited to, the face-piece, head straps, valves, connecting tube, and cartridges, canisters or filters; and
   - A check of elastomeric parts for pliability and signs of deterioration.

8. In addition to the requirements above, self-contained breathing apparatus shall be inspected monthly.

9. Air and oxygen cylinders shall be maintained in a fully charged state and shall be recharged when the pressure falls to 90% of the manufacturer's recommended pressure level. The employer shall determine that the regulator and warning devices function properly.

10. For respirators maintained for emergency use, «Company_Name» shall:

    - Certify the respirator by documenting the date the inspection was performed, the name (or signature) of the person who made the inspection, the findings, required remedial action, and a serial number or other means of identifying the inspected respirator; and
    - Provide this information on a tag or label that is attached to the storage compartment for the respirator, is kept with the respirator, or is included in inspection reports stored as paper or electronic files. This information shall be maintained until replaced following a subsequent certification.

11. Repairs. PNT Consulting LLC shall ensure that respirators that fail an inspection or are otherwise found to be defective are removed from service, and are discarded or repaired or adjusted in accordance with the following procedures:

    - Repairs or adjustments to respirators are to be made only by persons appropriately trained to perform such operations and shall use only the respirator manufacturer's NIOSH-approved parts designed for the respirator;
    - Repairs shall be made according to the manufacturer's recommendations and specifications for the type and extent of repairs to be performed; and
    - Reducing and admission valves, regulators, and alarms shall be adjusted or repaired only by the manufacturer or a technician trained by the manufacturer.

Training

1. PNT Consulting LLC shall ensure that each employee required to use a respirator can demonstrate knowledge of at least the following:

    - Why the respirator is necessary and how improper fit, usage, or maintenance can compromise the protective effect of the respirator;
    - What the limitations and capabilities of the respirator are;
    - How to use the respirator effectively in emergency situations, including situations in which the respirator malfunctions;
    - How to inspect, put on and remove, use, and check the seals of the respirator;
    - What the procedures are for maintenance and storage of the respirator;
    - How to recognize medical signs and symptoms that may limit or prevent the effective use of respirators; and

2. The training shall be conducted in a manner that is understandable to the employee.

3. The training shall be provided prior to requiring the employee to use a respirator in the workplace.

4. Retraining shall be administered annually, and when the following situations occur:

   - Changes in the workplace or the type of respirator render previous training obsolete;
   - Inadequacies in the employee's knowledge or use of the respirator indicate that the employee has not retained the requisite understanding or skill; or
   - Any other situation arises in which retraining appears necessary to ensure safe respirator use.

6. The basic advisory information on respirators, as presented in Appendix D of Section 5144 of the California Code of Regulations (8CCR~5144), shall be provided to employees who wear respirators when such use is not required by this section or by the employer.

Program Evaluation

1. Paul B Harvey, Chief Operations Officer shall conduct evaluations of the workplace as necessary to ensure that the provisions of the current written program are being effectively implemented and that it continues to be effective.

2. Paul B Harvey shall regularly consult employees required to use respirators to assess the employees' views on program effectiveness and to identify any problems. Any problems that are identified during this assessment shall be corrected. Factors to be assessed include, but are not limited to:

   - Respirator fit (including the ability to use the respirator without interfering with effective workplace performance);
   - Appropriate respirator selection for the hazards to which the employee is exposed;
   - Proper respirator use under the workplace conditions the employee encounters; and
   - Proper respirator maintenance.

Recordkeeping

1. Records of medical evaluations must be retained and made available in accordance with section 3204 (8CCR~3204).

2. «Company_Name» shall establish a record of the qualitative and quantitative fit tests administered to an employee including:

- The name or identification of the employee tested;
- Type of fit test performed;
- Specific make, model, style, and size of respirator tested;
- Date of test; and
- The pass/fail results for QLFTs or the fit factor and strip chart recording or other recording of the test results for QNFTs.
- Fit test records shall be retained for respirator users until the next fit test is administered.

3. Program records shall be made available upon request to affected employees and to the Chief of the Division of Occupational Safety and Health or designee for examination and copying.

Procedures for Cleaning Respirators.

1. Remove filters, cartridges, or canisters. Disassemble facepieces by removing speaking diaphragms, demand and pressure-demand valve assemblies, hoses, or any components recommended by the manufacturer. Discard and replace any defective parts.

2. Wash components in warm (43 deg. C [110 deg. F] maximum) water with a mild detergent or with a cleaner recommended by the manufacturer. A stiff bristle (not wire) brush may be used to facilitate the removal of dirt.

3. Rinse components thoroughly in clean, warm (43 deg. C [110 deg. F] maximum), preferably running water. Drain.

4. When the cleaner used does not contain a disinfecting agent, respirator components should be immersed for two minutes in one of the following:
    - Hypochlorite solution (50 ppm of chlorine) made by adding approximately one milliliter of laundry bleach to one liter of water at 43 deg. C (110 deg. F); or,
    - Aqueous solution of iodine (50 ppm iodine) made by adding approximately 0.8 milliliters of tincture of iodine (6-8 grams ammonium and/or potassium iodide/100 cc of 45% alcohol) to one liter of water at 43 deg. C (110 deg. F); or,
    - Other commercially available cleansers of equivalent disinfectant quality when used as directed, if their use is recommended or approved by the respirator manufacturer.

5. Rinse components thoroughly in clean, warm (43 deg. C [110 deg. F] maximum), preferably running water. Drain. The importance of thorough rinsing cannot be overemphasized. Detergents or disinfectants that dry on face-pieces may result in dermatitis. In addition, some disinfectants may cause deterioration of rubber or corrosion of metal parts if not completely removed.

6. Components should be hand-dried with a clean lint-free cloth or air-dried.

7. Reassemble face-piece, replacing filters, cartridges, and canisters where necessary.
8. Test the respirator to ensure that all components work properly.

Appendix D to Section 5144

Mandatory Information for Employees Using Respirators When Not Required

Respirators are an effective method of protection against designated hazards when properly selected and worn. Respirator use is encouraged, even when exposures are below the exposure limit, to provide an additional level of comfort and protection for workers. However, if a respirator is used improperly or not kept clean, the respirator itself can become a hazard to the worker. Sometimes, workers may wear respirators to avoid exposures to hazards, even if the amount of hazardous substance does not exceed the limits set by OSHA standards. If your employer provides respirators for your voluntary use, or if you provide your own respirator, you need to take certain precautions to be sure that the respirator itself does not present a hazard.
You should do the following:

1. Read and heed all instructions provided by the manufacturer on use, maintenance, cleaning and care, and warnings regarding the respirators limitations.

2. Choose respirators certified for use to protect against the contaminant of concern. NIOSH, the National Institute for Occupational Safety and Health of the U.S. Department of Health and Human Services, certifies respirators. A label or statement of certification should appear on the respirator or respirator packaging. It will tell you what the respirator is designed for and how much it will protect you.

3. Do not wear your respirator into atmospheres containing contaminants for which your respirator is not designed to protect against. For example, a respirator designed to filter dust particles will not protect you against gases, vapors, or very small solid particles of fumes or smoke.

4. Keep track of your respirator so that you do not mistakenly use someone else's respirator.

Model Calosha Lipp Template

Ergonomics

Studies have shown over the years that poorly designed and arranged work areas, awkward work postures and repetitive motions can lead to a variety of injuries including carpal tunnel syndrome and tendonitis, which are often referred to as repetitive motion injuries (RMI's). As with cancer, heart disease, and many other ailments, there are risk factors that increase an individual's likelihood of developing RMI's. If the risk factors are reduced, so are the chances of being injured. While some of these risk factors, such as family history, cannot be controlled in the employment setting, many can. Including:

- The force used to perform a task,
- Posture while performing tasks,
- The number of repetitions performed in a given time period, and
- Mechanical stresses such as hard surfaces.

PNT Consulting LLC has developed the following program designed to minimize RMIs. The program includes work-site evaluations, control of exposures that have caused RMIs and training of employees.

Work-site Evaluation and Exposure Reduction.

Each job, process, or operation of identical work activity that has resulted in at least two RMI's or a representative number of such jobs, processes, or operations shall be evaluated for exposures that have caused RMIs. PNT Consulting LLC may request assistance from outside consultants for this purpose.

Any exposures that have caused RMIs shall, in a timely manner, be corrected or if not capable of being corrected have the exposures minimized to the extent feasible. We shall consider engineering controls, such as work station redesign, adjustable fixtures or tool redesign, and administrative controls, such as job rotation, work pacing or work breaks.

Training

Affected employees shall be provided training that includes an explanation of:

- PNT Consulting LLC program;
- The exposures which have been associated with RMIs;
- The symptoms and consequences of injuries caused by repetitive motion;
- The importance of reporting symptoms and injuries to their supervisor; and
- Methods used to minimize RMIs.

This training may be conducted as part of the regular safety meetings.

Forklifts

Each year about 100 workers are killed and almost 95,000 injured in industrial truck accidents across the country. To properly protect our employees from such accidents, PNT Consulting LLC has adopted the following Forklift Safety Program.

General

PNT Consulting LLC will ensure that each powered industrial truck operator is competent to operate a powered industrial truck safely, as demonstrated by the successful completion of the training and evaluation specified below.

Prior to permitting an employee to operate a powered industrial truck (except for training purposes), PNT Consulting LLC shall ensure that the employee has successfully completed a training program.

Training Program Implementation.

Trainees may operate a powered industrial truck only:

- under the direct supervision of persons who have the knowledge, training, and experience to train operators and evaluate their competence; and
- where such operation does not endanger the trainee or other employees.

Training shall consist of a combination of formal instruction (e.g., lecture, discussion, interactive computer learning, video tape, written material), practical training (demonstrations performed by the trainer and practical exercises performed by the trainee), and evaluation of the operator's performance in the workplace.

All operator training and evaluation shall be conducted by persons who have the knowledge, training, and experience to train powered industrial truck operators and evaluate their competence.

Note: This section does not require that the training be given by any particular individual or organization. The trainer must only be able to demonstrate that they have appropriate knowledge, training and experience to train others and evaluate their competence.

Training Program Content.

Powered industrial truck operators shall receive initial training in the following topics.

- Operating instructions, warnings, and precautions for the types of truck the operator will be authorized to operate;
- Differences between the truck and the automobile;
- Truck controls and instrumentation: where they are located, what they do, and how they work;
- Engine or motor operation;
- Steering and maneuvering;
- Visibility (including restrictions due to loading);
- Fork and attachment adaptation, operation, and use limitations;
- Vehicle capacity;
- Vehicle stability;
- Any vehicle inspection and maintenance that the operator will be required to perform;
- Refueling and/or charging and recharging of batteries;
- Operating limitations;
- Any other operating instructions, warnings, or precautions listed in the operator's manual for the types of vehicle that the employee is being trained to operate.
- Workplace-related topics:
- Surface conditions where the vehicle will be operated;
- Composition of loads to be carried and load stability;
- Load manipulation, stacking, and unstacking;
- Pedestrian traffic in areas where the vehicle will be operated;
- Narrow aisles and other restricted places where the vehicle will be operated;
- Hazardous locations where the vehicle will be operated;
- Ramps and other sloped surfaces that could affect the vehicle's stability;
- Closed environments and other areas where insufficient ventilation or poor vehicle maintenance could cause a buildup of carbon monoxide or diesel exhaust;
- Other unique or potentially hazardous environmental conditions in the workplace that could affect safe operation;
- The requirements of this section.

Refresher Training and Evaluation.

Refresher training, including an evaluation of the effectiveness of that training, shall be conducted to ensure that the operator has the knowledge and skills needed to operate the powered industrial truck safely.

Refresher training in relevant topics shall be provided to the operator when:

- The operator has been observed to operate the vehicle in an unsafe manner;
- The operator has been involved in an accident or near-miss incident;

- The operator has received an evaluation that reveals that the operator is not operating the truck safely;
- The operator is assigned to drive a different type of truck; or
- A condition in the workplace changes in a manner that could affect safe operation of the truck.

An evaluation of each powered industrial truck operator's performance shall be conducted at least once every three years.

Avoidance of Duplicative Training.

If an operator has previously received training in a topic specified above, and such training is appropriate to the truck and working conditions encountered, additional training in that topic is not required if the operator has been evaluated and found competent to operate the truck safely.

Note: This section reduces the training requirement for previously trained operators provided we can demonstrate that the operator knows the material. Since some of the required training is unique to the area where the lift will be operated, we must still cover these areas even if the employee was previously trained.

Certification.

PNT Consulting LLC shall certify that each operator has been trained and evaluated as required by this paragraph. The certification shall include the name of the operator, the date of the training, the date of the evaluation, and the identity of the person(s) performing the training or evaluation.

Fire Prevention and Emergency Action Plan.

PNT Consulting LLC has developed the following emergency plan to cover those designated actions that must be taken to ensure employee safety from fire and during other emergencies. Any questions about this plan should be directed to Paul B Harvey, Chief Operations Offficer, 903-641-9791 .

Office, Shop & Warehouse Emergency Evacuation and Fire Prevention

Paul B Harvey is responsible for ensuring the following:

1. That all required emergency exits are clearly identified in the office, shop, and warehouse and that all required fire fighting and emergency equipment is available and in good condition.

   The following items will be maintained:

   - First aid kit
   - Drinking water
   - Flashlight
   - Portable battery powered radio and batteries
   - Fire extinguishers
   - Wrench to shut off the main gas valve
   - Pry bars, axes, saws, tools or similar devices for employee rescue

2. Creating a facility map designating all emergency evacuation routes and the locations of all fire fighting equipment and emergency supplies and equipment. These maps will be posted in at least two locations in the facility.

3. Training all exposed employees on the procedures to be followed in the event of fire, earthquake or other emergency including how to properly notify other affected employees.

4. Identifying potential fire hazards in the office, shop and warehouse and ensuring that adequate steps are taken to prevent fires.

5. Ensuring that combustible trash and materials are removed promptly from the facility, and that all flammable and combustible liquids are properly stored and handled.

During an Emergency

In the event of an emergency such as earthquake or fire, all employees are expected to

evacuate the premises immediately. Paul B Harvey or Nicolaza R Harvey may assign some employees the task of shutting off the gas or electricity, if needed. At no time will any employee be expected to jeopardize their own safety to do this.

Employees will be notified of emergencies through one of the following:

- Fire alarm
- Intercom
- Emergency horn
- Direct voice communication

After the emergency evacuation has been completed, a head count will be taken to ensure everyone is out of the building.

If necessary, Paul B Harvey or Nicolaza R Harvey may assign some employees to rescue trapped employees.

Fire Prevention in Shops and Warehouses

The following procedures will be used to prevent fires in shops and warehouses.

1. All accumulated combustible trash and debris will be removed as soon as practical.

2. Flammable liquids will only be stored and dispensed from UL approved safety containers designed for that purpose.

3. All rags soaked with flammable or combustible liquids will be properly stored in closed metal containers.

4. Appropriate precautions will be taken to prevent fires when torch cutting, welding or soldering.

5. Compressed gas cylinders containing flammable or explosive gasses will be properly stored in the upright position with their caps on and protected from heat or puncture. Fuel gas and oxygen shall be separated at least 20 feet when stored.

6. Smoking or open lights are prohibited within 50 feet of flammable liquid or gas storage and dispensing areas.

7. Flammable solvents will not be used for cleaning purposes.

8. A fire extinguisher, rated not less than 2A, shall be provided for each 3,000 square feet of the floor area, or fraction thereof. Where the floor area is less than 3,000 square feet, at least one extinguisher shall be provided.

9. Travel distance from any point of the protected area to the nearest fire extinguisher shall not exceed 75 feet.

10. At least one fire extinguisher, rated not less than 2A, shall be provided on each floor. In multi-story buildings, at least one fire extinguisher shall be located adjacent to the stairway at each floor level.

11. A fire extinguisher, rated not less than 10B, shall be provided within 50 feet of wherever more than 5 gallons of flammable or combustible liquids or 5 pounds of flammable gas are being used on the job site. This requirement does not apply to the integral fuel tanks of motor vehicles.

12. Portable fire extinguishers shall be inspected monthly, or at more frequent intervals by the employer, and serviced at least annually by a person licensed or registered by the State Fire Marshal. NOTE: Inspection is a "quick check" that an extinguisher is available and will operate. It is intended to give reasonable assurance that the extinguisher is fully charged and operable. This is done by seeing that it is in its designated place, that it has not been actuated or tampered with, and that there is no obvious or physical damage or condition to prevent operation.

13. Suitable fire control devices, such as portable fire extinguishers, shall be available at locations where flammable or combustible liquids are stored.

14. At least one portable fire extinguisher, having a rating of not less than 20-B units, shall be located outside of, but not more than 10 feet from, the door opening into any room used for flammable liquid storage.

15. At least one portable fire extinguisher, having a rating of not less than 20-B units, shall be located not less than 25 feet, nor more than 75 feet, from any flammable liquid storage area located outside.

Office Safety

Office accidents can and do happen. To prevent them, PNT Consulting LLC has developed the following rules for our office staff. We will also endeavor to include office employees in periodic safety meetings. If at any time, you feel there is a safety hazard, or you have any safety concerns, please do not hesitate to notify Paul B Harvey, Chief Operations Offficer.

1. Report all accidents and injuries, no matter how minor, to your Supervisor immediately.
2. Correct or report any safety hazards that you observe.
3. Clean up any spilled material that may present a slipping hazard.
4. Do not stretch any cords across aisles that may present a tripping hazard.
5. No one is allowed to climb on shelves or stand on chairs; you must use a step stool or ladder.
6. Keep all legs of the chair on the floor. Do not tilt chairs too far back.
7. No one shall be in the possession of, or under the influence of, alcohol or controlled substances while on the premises.
8. No horseplay will be tolerated.
9. Close file drawers when not in use.
10. Do not open more than one file drawer at a time. This could cause the cabinet to tip.
11. Do not store heavy objects above your head that could fall on you in an earthquake.
12. Do not store flammable or combustible materials near heaters or other heat sources.
13. If you are unsure how to do any task safely, ask your supervisor.
14. Do not operate any equipment you are not trained and authorized to use.
15. Always follow safe lifting procedures when lifting any object and get help for heavy loads.

- Bend your knees, not your back.
- Keep the load close to body.
- Keep your back straight.
- Lift with your legs.

- Do not lift and twist.

Office Ergonomics

Studies have shown over the years that poorly designed and arranged work areas and repetitive motions can lead to a variety of injuries including carpal tunnel syndrome and tendonitis, which are often referred to as repetitive motion injuries (RMI). As with cancer, heart disease, and many other ailments, there are risk factors that increase an individual's likelihood of developing RMI. If the risk factors are reduced, so are the chances of being injured. While some of these risk factors, such as family history, cannot be controlled in the employment setting, many can, including:

- The force used to perform a task.
- Posture while performing tasks.
- The number of repetitions performed in a given time period.
- Mechanical stresses such as hard surfaces.

The most significant RMI risk factor in office environments is poor body posture caused by improper workstation design or layout. In many cases employees are required to work in awkward positions for long periods of time. This greatly increases the likelihood of injury. Fortunately, this is often the easiest problem to correct. The goal is to perform work in neutral posture as much as possible. Neutral posture is best described as the most comfortable position and usually involves little or no twisting or deviation of the joints.

To apply the principle of neutral posture to the office setting we need to look at the five major components of office workstations. They are: the chair, the computer keyboard, the desk, the computer monitor, and the work product.

Chairs are often the most overlooked piece of office equipment, yet they are the single most important item from an ergonomic standpoint. A poor chair that lacks adjustments and support makes it almost impossible to work comfortably and in neutral posture. Good office chairs are fully adjustable including:

- Chair height.
- Height of the backrest.
- The position forward or back of the backrest.
- The position forward or back of the seat pan.
- The angle (tilt) of the seat pan.
- If armrests are provided, they should be height and width adjustable.

In many cases, fully adjustable chairs are provided for employees, but they never adjust them. Make sure you understand all of the adjustments your chair has and how to use them. When in doubt, read the owner's manual or ask. A properly adjusted chair should allow the user to rest their feet comfortably on the floor without putting pressure on their lower thighs. Their knees should be approximately the same height as their hips, or slightly higher, and they should be able to sit back against the backrest which is positioned for low

back support. If your feet don't rest comfortably on the floor the chair is too high. If the chair cannot be lowered any further, a footrest should be used. Whether armrests are provided depends on the type of workstation and personal preference. If they are provided, they should be height adjustable to allow the arms to rest comfortably on them without excessive shoulder drop. Armrests should also be well padded to reduce pressure on the lower arms.

Once the chair is properly adjusted, the next step is to position the keyboard to minimize bend in your wrists. In order to accomplish this, it is often necessary to have a position and height adjustable keyboard tray attached to the underside of the desk. These should not be confused with keyboard drawers that cannot be adjusted for height or position. If you do not use a tray, the only way to adjust the keyboard height is by moving the desk that is difficult at best, and sometimes impossible. Using a tray also frees up workspace on the desk where the keyboard once sat.

The height of the keyboard should be set so that there is approximately a 90-degree angle between the upper and lower arms. There should also be a straight line from the elbow out through your fingers. If your fingers hang down too much or bend up, creating a "V" between your hand and forearm, you place extra stress on your wrist. Many people find it comfortable to use padded wrist rests in front of the keyboard. This often helps minimize wrist deflection. The keyboard tray should also be adjusted so that you do not have to reach forward too far to type. Your elbows should be close to your side and back by your spine, not out in front of you. Do not extend the small legs on the bottom of the keyboard tray. This increases the wrist angle unnecessarily. Many keyboard trays now also have extensions for your mouse. This places everything you need within easy reach.

After you have adjusted the chair and keyboard tray, try using your desk. You should be able to comfortably write and use your other office equipment such as the calculator and phone. Some of these items may need to be moved closer to you. Your legs should also fit easily under the desk. Often, stored items such as boxes, block this and should be removed. The standard desk height is fine for most people. If you are exceptionally tall or short, however, adjusting the desk up or down an inch, if possible, may be helpful.

Now you are ready to position your monitor. It should be directly in front of you. Monitors that are off to one side cause you to turn your neck that can lead to injury. The top of the screen should be at about eye level. If the screen is too low your neck will ache from constantly looking down. Putting old phone books or reams of copy paper under them can easily raise monitors. You may also use a special adjustable monitor holder to free up desk space. Tilt the screen so that the top is closer to you than the bottom. This will reduce glare from overhead lights. If you can't get away from outside light, use a glare screen to improve contrast and reduce eyestrain that can cause headaches. Also know how to adjust the screen contrast and brightness controls and keep the screen clean and free of dust and fingerprints.

The work product should be kept within easy reach. Heavy notebooks or binders that you

use often should be placed near you. If you use the phone a lot, consider using a headset to reduce neck strain and free up your hands for other tasks. Copyholders can be very helpful if you are entering data or typing from paper. Set them up so they are as close to the screen as possible to reduce neck motion.

The risk factors of force, repetition, and mechanical stress are also controllable in an office environment. Force can be reduced by using automatic staplers and date stamps. If heavy files, boxes, or other items must be moved, use carts and dollies. When filing, use two hands to hold the larger files and keep heavy items stored between knee and shoulder height to reduce strain on your back and arms.

Repetition is controllable through the use of task management. Break up the work as much as possible throughout the day. If possible, do not spend more than two hours at a time typing or entering data. Intersperse other tasks such as filing to use other muscle groups. You should take ten-minute breaks every two hours if you are doing repetitive tasks.

Mechanical stress occurs when you rest parts of your body against hard or sharp objects. This cuts off blood flow and presses on nerves, which can lead to numbness and tingling. Sharp edges can be padded or cushioned where needed to reduce this.

Heat Illness Prevention

Heat illness is a serious medical condition that results when a worker's body becomes overheated from working in areas with high temperatures. This often occurs with individuals working in outdoor environments such as construction. Heat illness can occur at any time but is a greater concern when day time temperatures exceed 85 degrees. Heat illness includes heat cramps, fainting, heat exhaustion, and heatstroke. Workers have died or suffered serious health problems from these conditions. Heat illness can be prevented and that is the policy of PNT Consulting LLC.

1. Provision of water. All employees shall have access to clean, safe potable drinking water at all times. Where drinking water is not plumbed or otherwise continuously supplied, it shall be provided in sufficient quantity at the beginning of the work shift to provide one quart per employee per hour for drinking for the entire shift. Employers may begin the shift with smaller quantities of water if they have effective procedures for replenishment during the shift as needed to allow employees to drink one quart or more per hour. The frequent drinking of water shall be encouraged.

2. Employees shall be allowed and encouraged to take a cool-down rest in the shade for a period of no less than five minutes at a time when they feel the need to do so to protect themselves from overheating. Such access to shade shall be permitted at all times.

3. Access to shade. Shade areas shall be provided on all jobsites. This may include buildings, trailers or other structures. If no such structures are available, EZ Up canopies or similar structures will be used to provide a shaded area for employees. Cooling measures other than shade (e.g., use of misting machines) may be provided in lieu of shade if the Foreman can demonstrate that these measures are at least as effective as shade in allowing employees to cool. Employees may request to use these areas at any time if they need a respite from heat and sun.

4. When the outdoor temperature in the work area exceeds **85** degrees Fahrenheit, the employer shall have and maintain one or more areas with shade at all times while employees are present that are either open to the air or provided with ventilation or cooling. The amount of shade present shall be at least enough to accommodate 25% of the employees on the shift at any time, so that they can sit in a normal posture fully in the shade without having to be in physical contact with each other. The shaded area shall be located as close as practicable to the areas where employees are working.

5. High-heat procedures. PNT Consulting LLC shall implement high-heat procedures when the temperature equals or exceeds 95 degrees Fahrenheit. These procedures shall include the following to the extent practicable:

    a. Ensuring that effective communication by voice, observation, or electronic means is maintained so that employees at the work site can contact a supervisor when

necessary. An electronic device, such as a cell phone or text messaging device, may be used for this purpose only if reception in the area is reliable.

b. Observing employees for alertness and signs or symptoms of heat illness.

c. Reminding employees throughout the work shift to drink plenty of water.

d. Close supervision of a new employee by a supervisor or designee for the first 14 days of the employee's employment by the employer, unless the employee indicates at the time of hire that he or she has been doing similar outdoor work for at least 10 of the past 30 days for 4 or more hours per day.

6. Training. Effective training in the following topics shall be provided to each supervisory and non-supervisory employee before the employee begins work that should reasonably be anticipated to result in exposure to the risk of heat illness:

- The environmental and personal risk factors for heat illness, as well as the added burden of heat load on the body caused by exertion, clothing, and personal protective equipment.
- «Company_Name» procedures for complying with the requirements of this standard.
- The importance of frequent consumption of small quantities of water, up to 4 cups per hour, when the work environment is hot and employees are likely to be sweating more than usual in the performance of their duties.
- The importance of acclimatization.
- The different types of heat illness and the common signs and symptoms of heat illness.
- The importance to employees of immediately reporting to the employer, directly or through the employee's supervisor, symptoms or signs of heat illness in themselves, or in co-workers.
- The employer's procedures for responding to symptoms of possible heat illness, including how emergency medical services will be provided should they become necessary.
- The employer's procedures for contacting emergency medical services, and if necessary, for transporting employees to a point where they can be reached by an emergency medical service provider.
- The employer's procedures for ensuring that, in the event of an emergency, clear and precise directions to the work site can and will be provided as needed to emergency responders. These procedures shall include designating a person to be available to ensure that emergency procedures are invoked when appropriate.

7. Supervisor training. Prior to supervising employees performing work that should reasonably be anticipated to result in exposure to the risk of heat illness effective training on the following topics shall be provided to the supervisor:

- The information required to be provided by section 6 above.
- The procedures the supervisor is to follow to implement the applicable provisions in this section.
- The procedures the supervisor is to follow when an employee exhibits symptoms consistent with possible heat illness, including emergency response procedures.
- How to monitor weather reports and how to respond to hot weather advisories.

Code of Safe Practices

General Safety Rules

1. All persons shall follow this Code of Safe Practices and render every possible aid to safe operations.

2. Failure to abide by the Code of Safe Practices may result in disciplinary action up to and including termination.

3. Immediately report any unsafe conditions, accidents, injuries or illness to your Supervisor or Manager.

4. If you are unsure of the safe method to do your job, STOP and ask your Supervisor. Ignorance is no excuse for a safety violation.

5. No one shall be knowingly permitted to work while the employee's ability or alertness is impaired by fatigue, illness, and prescription or over the counter drugs. Employees who are suspected of being under the influence of illegal or intoxicating substances, impaired by fatigue or an illness, shall be prohibited from working.

6. Never work while under the influence of an illegal or intoxicating substance, fatigued or ill.

7. Anyone known to be under the influence of any drugs or intoxicating substances which impair the employee's ability to safely perform the assigned duties shall not be allowed on the job.

8. Horseplay, scuffling, fighting and other acts that tend to have an adverse influence on the safety or well being of the employees are prohibited.

9. Work shall be well planned and supervised to prevent injuries in the handling of materials and in working together with equipment.

10. Keep your work area clean, free of debris, electrical cords and other hazards.

11. Immediately clean up spilled liquids.

12. Always notify all other individuals in your area who might be endangered by the work you are doing.

13. Do not operate equipment that you are not familiar with. Do not attempt to use such equipment until you are fully trained and authorized.

14. You are responsible for ensuring all safety guards are operable and in place. If they are not, STOP working and tell your Supervisor.

15. Never bring firearms, weapons, illegal drugs or alcoholic beverages on company or customer property or the job site.

16. A red tag system identifies equipment that is NOT to be operated, energized or used. All tag-out or lock-out notices and procedures must be observed and obeyed.

17. Do not block exits, fire doors, aisles, fire extinguishers, first aid kits, emergency equipment, electrical panels, or traffic lanes.

18. Do not leave tools, materials, or other objects on the floor that might cause others to trip and fall.

19. Do not run on the work site or in the shop or office area.

20. Do not distract others while working. If conversation is necessary, make sure eye contact is made prior to communicating.

21. Employees shall not enter manholes, underground vaults, chambers, tanks, silos, or other similar places that receive little ventilation, unless it has been determined that it is safe to enter.

22. Employees shall ensure that all guards and other protective devices are in proper places and adjusted, and shall report deficiencies promptly to the Supervisor or Manager.

23. Materials, tools, or other objects shall not be thrown from buildings or structures until proper precautions are taken to protect others from the falling objects.

24. Employees shall cleanse thoroughly after handling hazardous substances, and follow special instructions from authorized sources.

25. Gasoline or other flammable liquids shall not be used for cleaning purposes.

26. No burning, welding, or other source of ignition shall be applied to any enclosed tank or vessel, even if there are some openings, until it has first been determined that no possibility of explosion exists, and authority for the work is obtained from the Supervisor or Manager.

<u>Electrical Safety</u>

1. Only trained, qualified, and authorized employees are allowed to make electrical repairs or work on electrical equipment or installations.

2. All electrical equipment and systems shall be treated as energized until tested or otherwise proven to be de-energized.

3. All energized equipment and installations will be de-energized prior to the commencement of any work. If the equipment or installation must be energized for test or other purposes, special precautions will be taken to protect against the hazards of electric shock.

4. All equipment shall be locked out to protect against accidental or inadvertent operation when such operation could cause injury to personnel. Do not attempt to operate any switch, valve, or other energy-isolating device bearing a lock.

5. Safety grounds shall always be used where there is a danger of shock from back feeding or other hazards.

6. Polyester clothing or other flammable types of clothing shall not be worn near electrical circuits. Cotton clothing is much less likely to ignite from arc blast. Employees working on live circuits shall be provided Nomex or equivalent fire resistant clothing.

7. Suitable eye protection must be worn at all times while working on electrical equipment.

8. Always exercise caution when energizing electrical equipment or installations. Take steps to protect yourself and other employees from arc blast and exploding equipment in the event of a fault.

9. All power tools will be grounded or double insulated. Tools with defective cords or wiring shall not be used.

10. Metal jewelry should not be worn around energized circuits.

11. Extension and temporary power cords must be heavy duty and grounded. Frayed or defective cords shall not be used.

12. Electrical installations must be protected from accidental contact by enclosures or tight fitting covers.

13. Circuits shall not be overloaded with equipment or extension cords.

<u>Lock-out / Tag-out</u>

1. All machinery and electrical equipment shall be locked out and tagged prior to repair, cleaning, or adjustment unless power is necessary to perform the work. If so, other precautions, specified by your Supervisor, will be taken.

2. Use your own lock and key. No one else should have a key for your lock. Destroy all

duplicate keys.

3. Maintain control of your key at all times to prevent unauthorized use.

4. Never remove another employee's lock or energize tagged equipment.

5. If multiple employees are working on the same equipment, each employee should install their own lock.

6. Notify all affected employees that a lock-out/tag-out is required and the reasons for it.

7. If the equipment is operating, shut it down by the normal stopping procedure (depress stop button, open toggle switch, etc.).

8. Operate the switch, valve or other energy isolating devices so that the energy source(s) (electrical, mechanical, hydraulic, etc.) is disconnected or isolated from the equipment.

9. Stored energy, such as that in capacitors, springs, elevated machine members, rotating flywheels, hydraulic systems, and air, gas or water pressure, etc. must also be dissipated or restrained by methods such as grounding, repositioning, blocking, bleeding down, etc.

10. Lock-out all energy isolation devices with an individual lock.

11. After ensuring that no employees are exposed and as a check of having disconnected the energy sources, operate the push button or other normal operating controls to make certain the equipment will not operate. **Caution: Return operating controls to neutral position after the test.**

12. The equipment is now locked-out. Install red lock-out tag on operating controls.

13. After repair is complete and the equipment is ready for testing or normal operation, check the equipment to see that all cover plates and safety devices have been reinstalled.

14. When the equipment is clear, remove all locks and tags. The energy isolating devices may be operated to restore energy to the equipment.

Company Vehicles

1. Only authorized employees are permitted to operate company vehicles. Do not let anyone else drive your company vehicle.

2. Company vehicles are to be used for company business only. Personal, off duty and family use is prohibited.

3. Drive defensively and obey all traffic and highway laws.

4. Always wear your seat belt, whether the driver or a passenger.

5. Report all accidents as soon as possible to your supervisor and obtain a police report.

6. Keys must be removed from all unattended vehicles and the vehicles must be locked, unless parking inside the facility.

7. Do not jump from the cab or bed of company vehicles. Always use the stairs or a ladder.

8. Inspect your vehicle and report any defects or operating problems to your supervisor so that repairs can be made.

9. No smoking while refueling.

10. If your driver's license is revoked or expired, immediately notify your supervisor and do not drive.

11. Employees shall not engage in any activities that distract them from driving while operating vehicles. This includes eating, reading maps, texting, looking for reports or files and talking on a cell phone without a hands free device.

Ladder Safety

1. Inspect the ladder before using it. If it is broken, throw it out. Never repair a broken ladder, get a new one. Keep portable stairways, ladders and step stools in good condition and use them only in a safe manner.

2. Use the proper ladder for the job. Do not use “A” frame ladders as straight ladders. Make sure the ladder is tall enough to reach the work area. Do not use metal ladders for electrical work.

3. Do not place ladders in passageways, doorways, or any location where they might be hit or jarred, unless protected by barricades or guards.

4. Ladders should only be placed on hard level surfaces. Make sure the ladder feet are not placed on sandy, slippery, or sloping surfaces. Clean or sweep the area where the ladder feet will be and make sure the rubber feet are in good shape.

5. Ladder rungs and steps must be kept free of grease, oil, mud, or other slippery substances.

6. Arrange your work so you are able to face the ladder and use both hands while climbing.

Do not carry tools or equipment while climbing a ladder. Climb the ladder, and then hoist the tools or equipment with a line or a hoisting device.

7. Avoid temporary ladders. Always use a commercially made, construction grade ladder of the proper length for the work being performed.

8. Secure portable ladders in place and at a pitch so the leveling indicator is in alignment or the distance from the wall to the base of the ladder is at least 1' for every 4' of height.

9. Straight ladders shall be tied off the top of the ladder to prevent slipping.

10. Be aware of objects below you, move or cover sharp objects in case you fall.

11. Do not stand on or work from the 2nd rung from the top or above. Also do not reach too far from the ladder. Keep your belt buckle between the side rails.

12. Extension ladders shall extend at least 36" above the level being accessed.

13. On all ladders, do not step on cross bracing that is not intended to be used for climbing.

Personal Protective Equipment (PPE)

1. Use the correct PPE for each job assignment. If you don't know, ask.

2. PPE shall be maintained in good condition and cleaned regularly.

3. PPE shall be stored properly when not in use to protect it from damage.

4. Damaged or broken PPE must be returned to your foreman for replacement.

5. Hard hats must be worn on job sites at all times.

6. ANSI approved safety glasses must be worn when working with power tools, compressed air or gasses, chemicals or any other item that creates an eye injury hazard.

7. Face shields with safety glasses are recommended when grinding or working with hazardous chemicals.

8. Employees must wear industrial work shoes in the shop and on the job site. The shoes must have complete leather uppers and skid resistant soles and be in good condition. Steel toe protection is recommended.

9. Athletic style shoes, tennis shoes, open toe shoes, plastic or vinyl shoes or shoes with decorative accessories are not allowed.

10. Hearing protectors must be worn when working with loud equipment such as cut off saws, chain saws, air hammers or grinders.

11. Be sure the protective clothing you wear will not hamper or restrict freedom of movement due to improper fit.

12. Long pants of heavy-duty material must be worn. No shorts or sweat pants are allowed.

13. Do not wear loose, torn or frayed clothing, dangling ties, finger rings, dangling earrings, jewelry items, or long hair unless contained in a hair net, while operating any machine that could cause entanglement.

14. If required, wear NIOSH approved respirators when applying adhesives, paint, welding, grinding or working with chemicals. Read the MSDS to find out which type of respirators are required. Facial hair may not be permitted in certain circumstances.

Hand and Power Tools

1. Proper eye protection must be worn when using hand and power tools.

2. Know your hand and power tool applications and limitations. Always use the proper tool for the job.

3. Inspect cords and tools prior to use. Do not use tools that are faulty in any way. Exchange them for safe tools immediately.

4. Power tools must be grounded or double insulated. All power tools are to be plugged into a grounded GFCI outlet.

5. Do not use power tools in damp, wet or explosive atmospheres.

6. Do not lift, lower or carry portable electrical tools by the power cord.

7. Keep all safety guards in place and in proper working order.

8. Use clamps or vises to secure work pieces.

9. Do not force hand power tools. Apply only enough pressure to keep the unit operating smoothly.

10. Return all tools and other equipment to their proper place after use.

11. Unplug all power tools before changing bits and/or grinding disks.

12. Never leave chuck keys in the tool during operation.

13. Do not use a screwdriver as a chisel.

14. Before using sledges, axes or hammers, be sure the handles are securely fastened with a wedge made of sound material.

15. Do not use a handle extension on any wrench.

16. Files should be equipped with handles and should not be used as a punch or pry.

Hazardous Materials and Chemicals

1. Read all warning labels and Material Safety Data Sheets (MSDS) before using any chemicals. MSDS contain personal protective equipment and safety information and are available from your Supervisor.

2. Hazardous materials shall be handled in accordance with the MSDS and label. If protective equipment is required, use it.

3. Eye protection must be worn when working with hazardous materials or chemicals.

4. Mixing of chemicals is prohibited at all times unless required by the label. Before you mix - review all MSDS.

5. Always wash your hands thoroughly after handling chemicals and before eating or smoking, even if you were wearing protective gloves.

6. Never use solvents for hand cleaning. Use the non-toxic hand cleaners provided.

7. Store all hazardous materials properly in suitable containers that are properly labeled.

8. Use chemicals only in well-ventilated areas.

9. When using secondary containers, ensure that they are labeled as to their contents and hazards.

10. Do not disturb any asbestos. STOP work and tell your Supervisor. If you are not sure, STOP and ask.

11. Do not cut or weld stainless steel or galvanized metal without respiratory protection. These items create toxic fumes.

12. Work with lead, asbestos, cadmium and other toxic compounds require special precautions. Do not attempt to perform this work without special equipment and training.

Fire Prevention and Housekeeping

1. Always take precautions to prevent fires which may be started, particularly from oily waste, rags, gasoline, flammable liquids, acetylene torches, improperly installed electrical equipment and trash.

2. Fire fighting equipment is to be inspected on a regular basis. All discharged, damaged or missing equipment is to be immediately reported to a Supervisor. Tampering with fire equipment is prohibited.

3. Access to fire extinguishers must be kept clear at all times. Make note of the location of fire fighting equipment in your work area.

4. Never use gasoline or flammable solvents for cleaning purposes.

5. Smoking is prohibited within 20 feet of where flammable substances are present.

6. In case of fire, employees shall consider the safety of themselves and other individuals before saving property.

7. Keep your work areas free of debris. Remove useless material from the work area as fast as required to help reduce tripping hazards.

8. Maintain awareness of potential hazards when walking about the work site.

9. Keep tools, materials and equipment out of walkways and stairways at all times.

10. Sharp wires or protruding nails must be kept bent.

Traffic Safety

1. All employees exposed to traffic hazards are required to wear orange flagging garments (shirts, vests, jackets) at all times.

2. When possible, company vehicles are to be placed between the employees and traffic to prevent vehicles from entering the work area and hitting members of the crew.

3. All traffic controls will be established in accordance with the State of California Manual of Traffic Controls for Construction and Maintenance Work Zones.

4. Traffic controls are to be properly maintained throughout the workday. Signs and cones must be kept upright, visible and in their proper position at all times.

Welding and Cutting

1. Make sure your welding equipment is installed properly and grounded and in good working condition.

2. Always wear protective clothing suitable for the welding or cutting to be done.

3. Always wear proper eye protection when welding, brazing, soldering or flame cutting. Once you remove your welding helmet, put on safety glasses.

4. Keep your work area clean and free of hazards. Make sure that no flammable, volatile or explosive materials are in or near the work area.

5. Handle all compressed gas cylinders with extreme care. Keep caps on when not in use. Make sure that all compressed gas cylinders are secured to the equipment carriage, wall or other structural supports. When compressed gas cylinders are empty close the valve, install the cap and return to correct bottle storage area.

6. Store compressed gas cylinders in a safe place with good ventilation. Acetylene cylinders and oxygen cylinders should be kept at least 20 feet apart.

7. Do not weld or cut in confined spaces without special precautions and your Supervisor's authorization.

8. Do not weld on containers that have held combustibles or flammable materials.

9. Use mechanical exhaust ventilation at the point of welding when welding lead, cadmium, chromium, manganese, brass, bronze, zinc or galvanized metals. These metals are highly toxic and their fumes should not be breathed.

10. Make sure all electrical connections are tight and insulated. Do not use cables with frayed, cracked or bare spots in the insulation.

11. When the electrode holder or cutting torch is not in use, hang it on the brackets provided. Never let it touch a compressed gas cylinder.

12. Dispose of electrode and wire stubs in proper containers since stubs and rods on the floor are a safety hazard.

13. Use weld curtains to shield others from the light rays produced by your welding.

14. Make sure all compressed gas connections are tight and check for leaks. Do not use hoses with frayed or cracked spots.

15. Keep your leads orderly and out of walkways. Suspend them whenever possible.

16. DO NOT WELD if leads or machine are in or near water.

17. Make sure a portable fire extinguisher is nearby.

18. Keep your work area clean and free of hazards. When flame cutting, sparks can travel 30-40 feet. Do not allow flame cut sparks to hit hoses, regulators or cylinders.

19. Use oxygen and acetylene or other fuel gases with the appropriate torches and tips only for the purpose intended.

20. Never use acetylene at a pressure in excess of 15 pounds per square inch. Higher pressure can cause an explosion.

21. Never use oil, grease or any other material on any apparatus or thread fitting in the oxyacetylene or oxyfuel gas system. Oil and grease in contact with oxygen will cause spontaneous combustion.

22. Always use the correct sequence and technique for assembling and lighting the torch. Always use the correct sequence and technique for shutting off a torch.

23. Check valves must be used on all compressed gas cylinders to prevent back flow of the gas.

Model Calosha Lipp Template

Code of Safe Practices Receipt

This is to certify that I have received a copy of the PNT Consulting LLC Code of Safe Practices. I have read these instructions, understand them, and will comply with them while working for the company.

I understand that failure to abide by these rules may result in disciplinary action and possible termination of my employment with PNT Consulting LLC.

I also understand that I am to report any injury to my Supervisor or Manager immediately and report all safety hazards.

I further understand that I have the following rights.

- I am not required to work in any area I feel is not safe.
- I am entitled to information on any hazardous material or chemical I am exposed to while working.
- I am entitled to see a copy of the PNT Consulting LLC Safety Manual and Injury and Illness Prevention Program.
- I will not be discriminated against for reporting safety concerns.

_____

Print Name

_____

Sign Name Date

Copy: Employee
File

Hazard Communication Employee Training Handbook

It is important that all of our employees understand the information given about hazardous materials. If you have any questions regarding this, please ask your Supervisor or contact Paul B Harvey at 903-641-9791.

This material has been prepared to assist our employees in better understanding the hazardous materials with which they commonly work.

Chemicals can enter the body in a number of ways, including inhalation, skin contact or ingestion. The hazard of any substance is dependent on other variables such as age, sex and health of the employee as well as the concentration and duration of exposure. In other words, the same amount of a chemical may produce very different effects on two different people.

Chemicals are controlled in the workplace in such a manner so as to keep exposures below a level that may produce a reaction in very sensitive people. These levels are set by the government in the interest of minimizing harmful health effects of chemicals in the workplace. The Occupational Safety and Health Administration (OSHA) has established specific legally enforced permissible exposure limits (PEL) for hazardous substances in the workplace. The PEL indicates the concentration of airborne contaminants to which nearly all workers may be exposed to for eight hours a day, forty hours a week, over a working lifetime of 30 years, without adverse health effects.

This handbook briefly outlines the hazardous materials you may encounter in your work area. To simplify this task, we have broken down the chemicals used into special categories including:

1. Solvents
2. Adhesives
3. Paints & Dyes
4. Lubricants
5. Compressed Gases

In each category, the general characteristics of the material are presented along with the potential health effects of both short-term and long-term overexposure. The use of personal protective equipment and material handling procedures under normal conditions are also included.

Additional information on the materials you may be exposed to can be found in the product's Material Safety Data Sheets (MSDS). A complete folder of MSDS is available to you at all times in the office. Your Supervisor also has copies of data sheets on commonly used items.

At any time, an employee has the right to:

- Access the MSDS folder, and the Hazard Communication Program.
- Receive a copy of any chemical sampling data collected in the workplace.
- See their employment medical records upon request.

Personal protective equipment acts as a barrier to the routes of entry that a chemical may take into your body. As a barrier to chemicals that can be inhaled, there are a variety of respirators that may be used. The respirators either filter out particles, react with chemicals to neutralize them, or provide fresh, filtered air. There are two important things to remember about using respirators. The first is that a respirator only works when you wear it and use it properly. Second, and equally important, is that you must use the proper respirator for the specific hazard. Respirators designed for one type of chemical will not work for another. One last note about respirators is that no one is allowed to use any respirator without proper training. It is against the law to use a respirator without formal training in its proper use.

As a barrier to skin, we have gloves, facemasks, protective clothing, and head protection. A combination of these items may be necessary to provide the proper level of protection in your area.

As a barrier to the eyes, a variety of eye protection may be used. Goggles are recommended when pouring or handling chemicals which may splash the eyes. They are also recommended while spraying adhesives and paints. Protect your eyes; your vision is priceless and irreplaceable.

There is no real protection against swallowing materials except good work practices. Always label any container to prevent accidental drinking. Always thoroughly wash your hands with soap and water before eating, drinking or smoking. Keep any food and cigarettes away from the work area. Breads, fruits, and cigarettes can actually absorb chemicals from the air, to be inhaled or ingested later.

Prolonged exposure to excessive noise can cause permanent hearing damage. For those employees working in areas where excessive noise is generated, it is recommended that earplugs or ear muffs be used on a regular basis.

General first aid practices should be followed in the event of exposure to hazardous materials.

EYES: Flush eyes for at least 15 minutes with water.

SKIN: Wash the affected area with soap and water. If clothing is involved, remove and launder before putting back on. If caustic materials are spilled, remove clothing immediately and wash off of the body.

INGESTION: Do Not Induce Vomiting Unless the Label Indicates - transport the

affected person to the medical clinic immediately for treatment or call 911. They will take the appropriate action.

INHALATION: Generally, removing the person to fresh air is adequate after short-term exposure to most vapors. If breathing difficulty develops, dial 911 and be prepared to administer CPR.

The provisions set forth by the Federal Hazard Communication Program dictate that all containers of hazardous materials must be properly labeled. All containers of hazardous materials used must have, at a minimum, the original label provided by the manufacturer or a locally prepared label describing its contents and hazards involved.

1. Solvents

a. Halogenated Solvents

Characteristics: These products are usually clear, rapidly evaporating solvents containing chlorinates. They generally exhibit low flammability and have the consistency of water. They have a mild odor and are used in painting, stripping and other operations. Examples of chlorinated solvents are 1,1,1-Trichloroethane, perchloroethylene, methylene chloride, and Freon products.

Health Hazards: Most solvents are irritating to the eyes and upper respiratory tract. Excessive, repeated exposure to the skin may produce dermatitis and drying of the skin due to the de-fating properties of the solvents. Most are toxic and may be harmful or fatal if swallowed. Inhalation of excessive vapors may produce narcotic effects by depressing the central nervous system. Typical symptoms of overexposure include dizziness, nausea, and light-headedness in some individuals. Excessive repeated exposure to some solvents may produce chronic health effects on organs such as lungs, liver, kidney, and nervous system. Some solvents have been shown to produce cancer in laboratory animals. Compressed Freon products may produce "freeze burns" on the skin and eyes when released. Very high concentrations of vapors may be dangerous to life and health.

Personal Protective Equipment/Handling: Solvents should be handled with respect. Avoid any unnecessary exposure. Never wash hands in solvents. Wash with soap and water after using solvents. Avoid excessive skin contact. Use chemically resistant gloves if necessary. Avoid inhalation of vapors when possible. Use air-supplying respirators in areas of high concentration. Avoid contact with eyes. Use chemical goggles for protection. Provide ventilation when possible. Avoid contact with strong oxidizers (acids) and reactive metals (magnesium, aluminum powders).

Emergency/Special: In the event of eye contact, flush eyes for 15 minutes with water. Wash skin with soap and water. Remove soaked clothing and wash before reuse. Do not allow wet clothing to remain in prolonged contact with skin. If

ingested, do not induce vomiting, and seek medical attention immediately. Excessive inhalation should be treated by removing to fresh air. Apply artificial respiration if necessary. In the event of a major spill, evacuate the area and call the fire department. Avoid drainage into water sewage system.

b. Organic Solvents

Characteristics: Usually clear, rapidly evaporating petroleum or alcohol based solvents. These solvents are usually highly flammable and may or may not mix with water. They usually have an alcohol or oil-like odor and are used in a variety degreasing, painting and stripping operations. Examples of organic solvents are toluene, xylene, methyl ethyl ketone (MEK), acetone, and alcohols.

Health Hazards: Organic solvents evaporate very quickly and pose a great fire hazard. Because of this rapid evaporation and the natural penetrating nature of solvents, these materials can enter the body very rapidly through inhalation into the respiratory tract, and absorption through the skin and eyes. Exposures of these types may, in some instances, lead to skin irritation, eye irritation, and respiratory irritation. Solvents eventually enter the blood stream, and in cases of overexposure, may produce a variety of effects including nausea, headache, and dizziness. In very high concentrations, they may pose immediate threat to life and health. Chronic, repeated overexposure to organic solvents has been documented to produce adverse effects on the heart, lungs, central nervous system, liver, blood, and skin. They products may be harmful or fatal if swallowed. Some solvents may produce allergic reactions in sensitive people.

Personal Protective Equipment/Handling: It is important to minimize your exposure to solvents. For example, avoid skin contact by wearing non-porous gloves. Cotton or leather gloves should never be used while working with solvents because they absorb the solvent and allow it to reach your skin. If you can't wear gloves in your particular job, find other ways to avoid contact with the solvents. For example, use tongs to hold parts while cleaning them with solvents. Never wash your hands in a solvent - use soap or a waterless hand cleaner. Barrier creams may provide additional protection. Use ventilation systems when possible and avoid breathing solvent vapors. If your job requires it, wear a respirator. Use air-supplying respirators in areas of high concentrations. Protect your eyes with safety glasses or goggles. Avoid strong oxidizing agents. Ground and bond all containers when pouring or transferring chemicals.

Emergency/Special: In the event of eye contact flush eyes for 15 minutes with water. Avoid prolonged skin contact with any solvents. Wash skin with soap and water. Remove soaked clothing and wash before reuse. If ingested, seek medical help immediately - do not induce vomiting. If inhaled, move victim to fresh air and, if necessary, give artificial respiration. In the event of a spill, eliminate ignition sources, evacuate the area, and contact the fire department. Avoid drainage into water or

sewage system.

2. Adhesives

Characteristics: Adhesives are typically made up of resins composed of two reaction components: 1) the curing agent (hardener, catalyst, accelerator, activator or setting agent) and 2) the resin. The cured resins are generally found in a paste form, and the uncured resins are viscous liquids or solids.

Health Hazards: Some of the liquid uncured resins are skin irritants, sensitizers, or both. Solvents are often the major component of the uncured resins. They are primary skin irritants as a result of their ability to dry and remove natural oils from the skin. They may enhance the sensitizing effects of the dermatitis producing components discussed above.

Personal Protective Equipment/Handling: Because of the varying effects of these products, it is important that personal protective equipment be used. Safety glasses should be worn at all times. Impervious gloves and clothing should be worn. Remove and wash soaked clothing before reuse. If overexposure through inhalation occurs, remove the affected person to fresh air. Adhesives should only be used in well-ventilated areas. Air-purifying respirators may be necessary if ventilation is inadequate.

Emergency/Special: Keep all stored material away from heat and flames. Adequate ventilation should be provided if any of the liquid components spill. In the event of eye contact, flush with water for 15 minutes. If skin contact occurs, wash the affected area with soap and water. Do not induce vomiting if ingestion occurs. Seek medical attention immediately.

3. Paints & Dyes

a. Water Based Acrylics, Latex Paints

Characteristics: These products are available in a variety of colors for many uses including interior and exterior painting of equipment, vehicles and structures. They are usually nonflammable, but some may burn under extreme situations. They are all water soluble, and may contain some alcohol or ammonia solvents. They are pigmented with a variety of compounds, and usually have a thick, soupy consistency with a mild ammonia odor.

Health Hazards: Water based paints are generally considered non-hazardous. Some may contain solvents that may produce mild eye and/or nose irritation. Some of these products may produce limited skin irritations in extremely sensitive people. These products may be harmful if swallowed. Under normal working conditions, these products are generally considered safe for use.

Personal Protective Equipment/Handling: General ventilation should be sufficient, with exhaust ventilation necessary in confined spaces. Goggles or similar means of eye protection should always be used in any painting process. Gloves and protective clothing are recommended for extremely sensitive individuals. Avoid unnecessary exposure or contact. Do not freeze these products. Wash hands/skin with soap and water after use. Store in cool, dry place.

Emergency/Special: In the event of eye contact, flush with water for 15 minutes. Consult with physician if irritation persists. If excessive inhalation occurs, remove victim to fresh air. In the event of ingestion, give water and contact physician immediately. Wash soaked clothes before reuse. Use only soap and water to wash skin.

b. Lacquers, Primers, Non-Water Based Paint

Characteristics: These products come in a variety of colors and are used in various coating applications including painting, primering, and lacquering. They may contain both organic and halogenated solvents, and most have pigments that contain heavy metals. Some of the solvents and pigments that may be contained include acetone, diisobutyl ketone, xylene, methylene chloride, lead, chromium, and zinc compounds. They are usually highly flammable.

Health Hazards: Because of the high concentration of solvents in these paints, the health hazards are much like those discussed in category 1a and 1b, Solvents. These products also contain heavy metal compounds such as lead, chromium, and zinc. These heavy metals may build up in the blood producing chronic effects such as lead poisoning, which is characterized by weakness, difficulties in concentrating, and sleep problems.

Personal Protective Equipment/Handling: These products should be handled with care. Gloves are recommended for skin sensitive individuals. Goggles or safety glasses should be worn at all times. Mechanical ventilation and respirators may be required depending on size of operation and type of paint. Refer to specific MSDS for information. Long sleeve shirts are recommended. Do not use thinners or other solvents to remove paints from hands. Use lava soap and water, followed by hand lotion to prevent drying of the skin. Remove and wash soaked clothing before reuse. Do not apply to hot surfaces. Avoid sparks or flames when using. Never smoke in areas where these paints are being applied. Avoid breathing vapors and paint mist. Ground and bond containers during transfers. Store in cool, dry place, preferably in a flammable liquid storage cabinet.

Emergency/Special: In the event of eye contact, flush with water for 15 minutes. Wash affected skin areas with soap and water. In the event of ingestion, do not induce vomiting; contact a physician immediately. Inhalation exposure should be

treated by removing victim to fresh air. Apply artificial respiration if necessary. In the event of a spill, eliminate ignition sources, evacuate area, and contact fire department. Avoid drainage into water or sewage systems.

4. Lubricants

a. Insoluble Oils and Greases

Characteristics: Commonly known as lubricating oils or greases, these oils are generally petroleum based hydrocarbon mixtures that contain no water. Appearance may range from clear light brown liquids to dark brown greases. Oils can be fire hazards because they are combustible. Examples of common oils and greases are multi weight motor oil, gear lubricating oils and cutting oils used in some machining operations.

Health Hazards: Petroleum based oils and greases are generally of low toxicity. Oil mists and vapors can be generated from sawing and metal forming operations. Inhalation of these mists may cause mild irritation of the nose and throat. The mist may also irritate the eyes. Overexposure by inhalation, although rare, can cause headaches, nausea, or dizziness. The most common exposure to oils and greases is through the skin. Excessive or prolonged exposure of the skin to oils, especially used, dirty, or contaminated oils, may cause chronic skin conditions such as contact dermatitis. Ingestion of these substances may be harmful, depending on the purity of the oil, and the amount ingested.

Personal Protective Equipment/Handling: Under most circumstances, inhalation overexposure to oil products is not common. If no local exhaust ventilation is available in operations that generate oil mist, a respirator with an organic vapor/particulate cartridge should be utilized. There is no substitute for safe work practices and good personal hygiene. Any practical way to reduce time and frequency of skin exposure to oils is recommended. Mild waterless hand cleaners are helpful in removing oil. **Never use solvents to clean the skin.** This will only increase the risk of unusual skin disorders and/or dermatitis. Oil resistant protective gloves should be used whenever feasible, and skin cream should be applied after washing to prevent drying. Safety glasses or goggles should be worn to prevent oil from splashing into the eyes.

Emergency/Special: Lubricating oils, like any other chemicals, should be handled with care. In the event of eye contact, flush with water for 15 minutes, and then seek medical attention. In case of accidental ingestion, do not induce vomiting, give milk or water, and seek medical attention. Any areas of skin contact should be washed thoroughly with mild soap and lukewarm water or waterless hand cleaner to reduce the risk of skin disorders.

b. Aerosol Spray Lubricants

Characteristics: Aerosol spray lubricants, unlike other oil based lubricants, generally contain a high percentage of halogenated solvents such as 1,1,1 trichloroethane. Examples of spray lubricants include gear oil and silicone spray.

Health Hazards: Refer to category 1A (Halogenated Solvents) for overall health hazards of aerosol spray lubricants.

Additional Information: Most of the aerosol sprays are usually extremely flammable because of the propellants used (butane, propane, etc.). Phosgene gas, an extremely toxic gas, may be generated as a decomposition product of combustion if the spray lubricants come in contact with a flame (e.g., lighted cigarette, or welding operations) or a very hot metal. Phosgene gas can cause severe irritation to the nose, throat and eyes, even at extremely low concentrations. Exposure to moderate concentrations can cause a delayed onset of pulmonary edema (fluid in the lungs) that may progress to pneumonia.

Personal Protective Equipment/Handling: All solvent-based materials should be used in well-ventilated areas. Use a respirator if spraying moderate concentrations to avoid overexposure. Air-supplying respirators should be used if high concentrations are present. Avoid contact with the skin to reduce the risk of irritation and/or dermatitis. Use chemically resistant gloves for prolonged or repeated contact. Always wear safety glasses or goggles to prevent eye contact with the aerosol spray.

Emergency/Special: In the event of eye contact, flush with water for 15 minutes. Wash skin with soap and water. If ingested, do not induce vomiting and seek immediate medical attention. In case of overexposure by inhalation, remove the person to fresh air, seek medical attention, and apply artificial respiration if necessary. Containers should be stored in a clean, dry area. Avoid storing at temperatures above 80 degrees F. to reduce the risk of the aerosol containers bursting or exploding.

5. Compressed Gases

Characteristics: These gases are typically stored in cylinders. The gases are frequently stored in a liquid state and are utilized in a variety of applications such as welding (acetylene), oxidation (oxygen), fuel delivery (propane, butane), cryogenics (liquid helium, oxygen, nitrogen).

Health Hazards: Depending on the specific gas contained within the cylinder, the associated hazards exhibited can be similar to those of the substances described in previous categories. For example, anhydrous ammonia gas falls within the corrosive/caustic hazard category. Asphyxiation is the primary hazard associated with compressed gases since they can displace oxygen if there is a sudden and quick release, particularly in confined work areas. Compressed gases, either in

liquid or vapor form, are cryogenic and will cause severe frostbite and burns if allowed to contact the skin.

Personal Protective Equipment/Handling: Self-contained or airline breathing apparatus should be worn in oxygen-deficient atmospheres. General ventilation is usually adequate to maintain sufficient oxygen level. Avoid skin contact with liquid gases. Avoid smoking or other sources of ignition around oxidizers and fuel gases. Compressed gas cylinders should always be handled with extreme care as serious accidents may result from the misuse, abuse or mishandling of cylinders.

Emergency/Special: In the event of a gas leak, evacuate all personnel from the danger area. Shut off the leak if it does not pose a grave risk. Ventilate the area of the leak and move the leaking container to a well-ventilated area. If inhalation overexposure occurs, remove victim to fresh air and give artificial respiration if necessary. If liquid contacts skin, flood the affected area with warm water and seek medical attention.

Driving Safety Rules

Motor vehicle accidents continue to be the leading cause of workplace death in the nation. In 1995 alone, 1,329 workers were killed on the job, in auto accidents. That's one employee death every 7 hours of every day.

Motor vehicle accidents are:*

- The leading cause of death at work.
- The leading cause of death for people age 15 to 24.
- The second most common cause of death for people age 25 to 44.
- The third most common cause of death for people age 45 to 64.
- The fifth most common cause of death for all ages behind heart disease, cancer, stroke, and lung disease.

*Source: 1995 statistics from the National Institute of Occupational Safety and Health (NIOSH) and the Bureau of Labor Statistics (BLS).

Fortunately, auto accidents are often preventable. By driving defensively and using good judgment, you can significantly reduce your chances of being hurt or killed in a motor vehicle. The following defensive driving tips are designed to help you avoid accidents and injuries from your fleet operations.

These rules are mandatory for all employees driving PNT Consulting LLC vehicles.

1. Personal and off duty use of PNT Consulting LLC vehicles is prohibited.

2. Only authorized employees may drive PNT Consulting LLC vehicles. No other family members may drive company vehicles.

3. Non-employee passengers are not permitted in PNT Consulting LLC vehicles at any time unless they are business related.

4. Seat belts must be worn in PNT Consulting LLC vehicles at all times.

5. No employee is permitted to drive PNT Consulting LLC vehicles while impaired by alcohol, illegal or prescription drugs, or over the counter medications.

6. All accidents involving PNT Consulting LLC vehicles must be reported to the office immediately.

7. Employees with two or more preventable accidents in a three year period, or that obtain three points on their driving record, will be subject to a loss of their driving privileges or have their driving privileges restricted.

8. The single biggest thing you can do to save your life is wearing your seat belt. Hundreds of studies over the years have proven, without a doubt, that seat belts save lives. This is true even in crashes involving fire and water submersion. Properly worn seat belts actually absorb crash forces that, otherwise, would be transferred to your body. If the seat belts in your vehicle are inoperative or defective, have them repaired or replaced immediately. You should wear the lap belt low across your hips and have the shoulder strap directly across your chest. You also need to keep the belt tight. There should not be more than an inch between your body and the belt at any point.

9. Get the big picture while driving. Keep your eyes aimed high and try to anticipate hazards and other drivers' mistakes. You should be looking well ahead of where you are. You should also always leave yourself an out in case the other driver does the unexpected.

10. Maintain a safe following distance at all times. Approximately 1/3 of all auto accidents are rear end collisions. You should be at least two seconds behind the vehicle in front of you to allow yourself sufficient time to stop. Do not tailgate. Following distances should be increased for larger vehicles or if in slippery or rainy conditions.

11. Avoid passing on two lane roads. Head on collisions are the most common cause of fatalities. You should also turn on your headlights while driving on two lane roads. This helps oncoming traffic see and avoid you. Never pass another vehicle on blind turns or hills.

12. You must be sober and alert at all times while driving. The use of drugs or alcohol while driving, or prior to driving, significantly increases your chances of having an accident. It should be at least eight hours from the time you take a drink until operating a vehicle. You should also avoid the use of prescription or over the counter medicines that make you drowsy.

13. Inspect the vehicle for mechanical defects prior to each trip. Test your brakes as soon as you start out to insure they are properly operating. Worn tires can make your vehicle difficult to control or stop.

14. Avoid dialing the phone, reading maps or other distracting activities while driving. These actions take your eyes off the road and often cause you to swerve. Pull over into a safe parking area before making that call.

15. Never drive faster than road conditions warrant. Slow down when road conditions are poor (rain, fog, night) and never exceed posted speed limits.

16. Always signal when changing lanes or turning.

17. Use caution when passing any stopped vehicle, especially near intersections or cross walks.

18. Aggressive driving has become a significant problem in the past few years. Just don't do it. Avoid tailgating, rapid lane changes, speeding, and hand gestures to bad drivers. You never know, they may be armed. If you are being tailgated, change lanes and let them pass. It's really not worth getting killed over.

19. Intersection collisions are also a significant problem. These are often caused by someone running the red light. You should always be under control when approaching an intersection and be prepared to stop if the light changes.

20. Slow down and look for trains at all railroad crossings. Even with modern signals and gates, hundreds of cars are hit by trains each year at grade crossings.

21. Use your low beams while driving in fog and slow down. If you can't see, pull over into a safe parking area and wait for better visibility. Do not stop in the traffic lanes. You will almost certainly be hit by another vehicle if you do.

22. Always walk behind the vehicle before backing. This will insure that there are no people or objects behind you that you cannot see from the drivers seat. You should also make sure that all loads are properly secured to prevent them from moving. Numerous accidents are caused by objects that have fallen off company vehicles.

23. Always signal well in advance when changing lanes or turning, and make sure to check your blind spot for other vehicles. Also, avoid driving in someone else's blind spot. If they can't see you, they don't know you are there.

24. Yield the right of way until you are sure the other driver is going to stop. Just because you have the legal right of way doesn't mean you should always take it. Always yield the right of way to emergency vehicles.

Defensive drivers:

- Expect the unexpected
- Anticipate bad driving by others
- Look ahead for hazards
- Always leave themselves an out
- Always drive under control
- Obey the rules of the road

Company Vehicle Policy Receipt

This is to certify that I have received a copy of the PNT Consulting LLC Driving Safety Rules and Company Vehicle Policy. I have read these instructions, understand them, and will comply with them while driving company vehicles.

I understand that failure to abide by these rules will result in disciplinary action and possible suspension of my driving privileges.

I also understand that I am to report any accident to the office immediately.

_____

Print Name

_____

Sign Name Date

Copy: Employee File

Compressed Gas

Introduction

Compressed and liquefied gases have the potential for creating hazardous working environments. This document contains information on the proper storage, handling, use and disposal of compressed and liquefied gas cylinders. Most of the information is general and applies to all compressed and liquefied gases. Specific information on selected hazard classes is contained in section 5 “Gases with Specific Hazards” of this document.

Purpose and Scope

Compressed and liquefied gases are routinely used in various construction and industrial work sites. This Gas Cylinder Safety Guideline applies to all **PNT Consulting LLC** company employees and subcontractors who use or otherwise handle compressed or liquefied gases or systems that use compressed or liquefied gases. It is the intent of this guideline to provide information on the safe usage of compressed and liquefied gases at work locations and afford employee protection from potential health and physical hazards associated with gas and cylinder usage. **PNT Consulting LLC** promotes the safe use of gases by offering training and information on the proper storage, handling, usage and disposal of gases and gas cylinders. Only trained and qualified personnel shall be allowed to use compressed and liquefied gases. Training should include the associated hazards of the materials, necessary safety precautions, personal protective equipment (PPE) and emergency response procedures. Appropriate material safety data sheets (MSDS’s), associated information, or other gas supplier product information shall be made accessible to compressed gas users.

Storage of Compressed and Liquefied Gas

Proper storage is critical for the safe usage of compressed and liquefied gases. Cylinder storage areas should be prominently posted with hazard information regarding the gases stored. The NFPA 704 diamond with a cylinder indicated in the “specific hazard” (white) section of the diamond and the corresponding 2 flammability, health and reactivity hazard sections also marked is an accepted method of signage. Other storage requirements are outlined below:

Storage Requirements:

All gas cylinders:

1. Shall not be stored in exits or egress routes.
2. Shall be stored within a well-ventilated area.

3. Shall not be stored in damp areas, near salt or corrosive chemicals, fumes, heat or where exposed to the weather.
4. Shall be stored in an upright position.
5. Shall be secured with a chain or appropriate belt above the midpoint, but below the shoulder. Laboratory cylinders less than 18" tall may be secured by approved stands or wall brackets.
6. Shall be capped when not in use or attached to a system (if the cylinder will accept a cap).
7. Shall be kept at least 20 ft. away from all flammable, combustible or incompatible substances. Storage areas that have a noncombustible wall at least 5 ft. in height and with a fire resistance rating of at least 30 minutes may be used to segregate gases of different hazard classes in close proximity to each other.
8. Shall be stored so that cylinders are used in the order in which they are received.
9. Shall be stored so that gases with the same hazard class are stored in the same area. Inert gases are compatible with all other gases and may be stored together.
10. Shall not be stored longer than one year without use.
11. Shall be stored so that full cylinders remain separate from empty cylinders.

Compressed and Liquefied Gas Handling

PNT Consulting LLC employees must be trained on the proper use, handling and storage of compressed gas cylinders. The Following requirements shall apply to the handling of gas cylinders:

A. Compressed gases shall be handled only by properly trained persons. Training must include the contents of this guideline as well as any specific information relevant to the gas being used and emergency information outlined in **PNT Consulting LLC** HASP, available at the construction site office.
B. Safety shoes are required when moving cylinders.
C. Cylinders should not be dragged or physically carried. Transport cylinders with a hand truck designed for the transport of cylinders. Cylinder caps shall be secured during transport. Cylinders must be transported in a vertical secured position using a cylinder basket or cart, and must not be rolled. Regulators should be removed and cylinders capped before movement. Cylinders should not be dropped or permitted to strike violently and protective caps are not used to lift cylinders
D. Prevent damage to cylinders. Locate cylinders where they will be protected from physical damage by striking or falling objects, corrosion or damage from public tampering.
E. No person other than the gas supplier shall attempt to mix gases in a cylinder.

F. Cylinders shall not be subjected to artificially create low temperatures without approval from the supplier.
G. Containers shall not be used for any other purpose than holding the contents as received.
H. Damaged or leaking cylinders must be reported to the project manager or local safety office immediately for proper disposal. See disposal information in section 7 of this document.
I. Cylinders shall not be picked up by the cap.
J. Ropes, chains and slings shall not be used to suspend cylinders, unless cylinder was designed for such.
K. Magnets shall not be used for lifting cylinders
L. Where appropriate lifting attachments have not been provided on the cylinder/container, suitable cradles or platforms to hold the containers shall be used for lifting.
M. The user shall not paint cylinders..
N. Leaking, defective, fire burned and corroded containers shall not be shipped without the approval of the supplier.
O. Visual and other inspections shall be conducted to determine that compressed gas cylinders are in a safe condition.

Compressed and Liquefied Gas Use

The following are general "good practices" guidelines to follow when using gas cylinders and compressed gases.

A. General Requirements-Cylinders must be equipped with the correct regulators. Regulators and cylinder valves should be inspected for grease, oil, dirt and solvents.

1. Ensure that regulator pressure control valve is relieved (i.e., closed) before attaching to tanks.
2. Close valves on gas cylinders when a system is not in use.
3. Remove all pressure from regulators not currently used (by opening equipment valves downstream **after** the regulators are closed).
4. Shut-off valves must not be installed between pressure relief devices and the equipment they are to protect.
5. Use pressure relief valves in downstream lines to prevent high pressure buildup in the event that a regulator valve does not seat properly and a tank valve is left on.
6. Relief valves should be vented to prevent potential buildup of explosive or toxic gases.
7. Never allow flames or concentrated heat sources to come in contact with a gas cylinder.
8. Never allow a gas cylinder to become part of an electrical circuit.
9. Never partially open a tank valve to remove dust or debris from the cylinder inlet.
10. Never use cylinder gas as compressed air.

11. Pressurize regulators slowly and ensure that valve outlets and regulators are pointed away from all personnel when cylinder valves are opened.
12. Cylinders which require a wrench to open the main valve shall have the wrench left in place on the cylinder valve while it is open. Use adequately sized wrenches (12” long) to minimize ergonomic stress when turning tight tank valves. Never apply excessive force when trying to open valves. Cylinders with “stuck” valves should be returned to suppliers to have valves returned to suppliers to have valves repaired.
13. Do not attempt to open a corroded valve; it may be impossible to reseal.
14. Valves should only be opened to the point where gas can flow into the system at the necessary pressure. This will allow for quicker shutoff in the event of a failure or emergency.
15. Use a cylinder cap hook to loosen tight cylinder caps. Never apply excessive force or pry off caps. Return to supplier to remove “stuck” caps.
16. Keep piping, regulators and other apparatus gas tight to prevent gas leakage.
17. Confirm gas tightness by using compatible leak test solutions (e.g., soap and water) or leak test instruments.
18. Release pressure from systems before connections are tightened or loosened and before any repairs
19. Do **not** use Teflon tape on CGA fittings (straight thread) where the seal is made by metal-to-metal contact. Use of Teflon tape causes the threads to spread and weaken, increasing the likelihood of leaks.
20. Never use adapters or exchange fittings between tanks and regulators.
21. Fluorescent light can be used to check for grease or oil in regulators and valves.

B. Labeling - The following labeling requirements shall apply to all gas cylinders:

1. Know the contents of each cylinder you are using.
2. Use only the vendor label for positive identification of contents of the cylinder. Be aware that color coding may be inconsistent from vendor to vendor.
3. Mixed gases shall be clearly labeled with the contents of the cylinder.
4. Empty cylinders shall be labeled with the word empty or the abbreviation MT.

Preferred labeling includes the identity of the material, statement of hazard and the associated signal word. For example, the preferred label for nitrogen would be:
Nitrogen CAUTION: HIGH PRESSURE GAS CAN CAUSE RAPID SUFFOCATION
Excellent sources of information for the warning and hazard information that should be contained on cylinders are the Air Products, Matheson and other gas company catalogs, the CGA Pamphlet C-7: "Precautionary Labeling and Marking of Compressed Gas Cylinders," as well as the manufacturer or distributor of the gas.

C. Manifolds, Valves and Regulators - The following information applies to the use of manifolds, valves and/or regulators:

1. Where compressed gas containers are connected to a manifold, the manifold and its related equipment, such as regulators, shall be of proper design for the product(s) they are to contain at the appropriate temperatures, pressures and flows.
2. Use only approved valves, regulators, manifolds, piping and other associated equipment in any system that requires compressed gas. Care must be taken to ensure that pressure gauges on regulators are correct for the pressure of the gas cylinder used. With the exception of lecture bottles, threads, configurations and valve outlets are different for each class of gases to prevent mixing of incompatible gases.
3. CGA Pamphlet V-1: Standard for Compressed Gas Cylinder Valves, lists the appropriate valve for each gas. Manufacturers and distributors should also be able to identify the valves and associated equipment required for each gas.
4. Lecture bottles use universal threads and valves, some of which are interchangeable. Label all associated equipment with the gas name to prevent unintentional mixing of incompatible materials.
5. Valves and regulators should undergo periodic maintenance and repair. A visual inspection should be performed before each usage to detect any damage, cracks, corrosion or other defects. Long term maintenance or replacement periods vary with the types of gases used, the length of use, and conditions of usage. Consult the cylinder, regulator or gas supplier for recommended valve and regulator maintenance schedules.
6. Valves and regulator maintenance histories should be known before usage. Valves that pass visual inspection are still subject to failure, therefore it is critical that toxic or poisonous gases are used in ventilated enclosures and have local exhaust ventilation in place for downstream pressure relief valves, etc.
7. Valves and regulators should only be repaired by qualified individuals. Valve and regulator manufacturers, gas supply companies, or valve and regulator specialty shops should be consulted for any repair needs.

Gases with Specific Hazard Classes

A. The following information regarding specific classes of gases is offered as additional guidance to be used in conjunction with the general usage requirements listed in Section 5.

Corrosive Gases

Compressed Gas

The following information is provided for corrosive gases. Examples include chlorine, hydrogen chloride, fluorine, hydrogen fluoride, hydrogen sulfide, carbon monoxide and carbon dioxide.

a) Metals become brittle when used in corrosive gas service, check equipment and lines frequently for leaks.
b) A diaphragm gauge should be used with corrosive gases that would destroy a steel or bronze gauge. Check with gas supplier for recommended equipment.
c) Remove regulators after use and flush with dry air or nitrogen.

Cryogenic Liquids and Gases

Cryogenic liquids and their boil-off vapors rapidly freeze human tissue and cause embrittlement of many common materials which may crack or fracture under stress.

All cryogenic liquids produce large volumes of gas when they vaporize (at ratios of 600:1 to 1440:1, gas: liquid) and may create oxygen-deficient conditions. Examples of common cryogenic liquids include liquid oxygen, hydrogen, helium, and liquid neon. The following information applies to the use and handling of cryogenics:

a) Use appropriate personal protective equipment (PPE) including insulated gloves and eye protection (goggles and a face shield) during any transfer of cryogenic liquid.
b) In the event of skin contact with a cryogenic liquid, do not rub skin, place the affected part of the body in a warm water bath (not to exceed 40°C [105°F]).
c) Use only equipment, valves and containers designed for the intended product and service pressure and temperature.
d) Inspect containers for loss of insulating vacuum. If the outside jacket on a container is cold or has frost spots, some vacuum has been lost. Empty the contents into another cryogenic container and remove the damaged unit from service. Repairs should be made by the manufacturer or an authorized company.
e) Transfer operations involving open cryogenic containers such as dewars must be conducted slowly to minimize boiling and splashing of the cryogenic fluid.
f) Ice or other foreign matter should not be allowed to accumulate beneath the vaporizer or the tank. Excessive ice buildup could result in the discharge of excessively cold gas or structural damage to the cryogenic container or surroundings.
g) All cryogenic systems including piping must be equipped with pressure relief devices to prevent excessive pressure buildup. Pressure reliefs must be directed to a safe location. Do not tamper with pressure relief valves or the settings for the valves.
h) Hot air, steam or hot water should be used to thaw frozen equipment. DO NOT USE water to thaw liquid helium.

Flammable Gases

Compressed Gas

The following information applies to the use and handling of flammable gases. Some common examples of flammable gases include acetylene, hydrogen, methane, propane and iso-butane.

a) Flammable gases, except for protected fuel gases, shall not be used near ignition sources. Ignition sources include open flames and sparks, sources of heat, oxidizing agents and ungrounded or non-intrinsically safe electrical or electronic equipment.
b) Portable fire extinguishers shall be available for fire emergencies. The fire extinguisher must be compatible with the apparatus and the materials in use.
c) Flames shall not be used for detecting leaks. A compatible leak detection solution shall be used for leak detection.
d) Spark proof tools shall be used when working with or on a flammable compressed gas cylinder or system.
e) Access doors to areas which use or store flammable gases shall be posted "No Open Flames."
f) Manifold systems shall be designed and constructed by competent personnel who are thoroughly familiar with the requirements for piping of flammable gases. Manifolds should comply with the standards of a recognized safety authority such as Underwriters Laboratories, Inc. Federal, state, local or insurance company specifications must be identified before starting design and construction. Consultation with the gas supplier before installation of manifolds is recommended.

Fuel, High Pressure and Oxidizing Gases

The following information applies to the use and handling of fuel, high pressure and oxidizing gases:

a) Fuel gases often use a combination of flammable and oxidizing gases. Use of fuel gases must comply with OSHA 29 CFR1910.253--Oxygen-Fuel Gas Welding and Cutting, 29 CFR1910.102--Acetylene and 29 CFR1910.103--Hydrogen. Additionally, adherence to the requirements of the Compressed Gas Association as defined in Pamphlet G-1: Acetylene, Pamphlet SB-8: Use of Oxy-fuel Gas Welding and Cutting Apparatus, and the requirements of the National Fire Protection Association Standard 51: Standard for the Design and Installation of Oxygen-Fuel Gas Systems for Welding, Cutting and Allied Processes is required.
b) High pressure gases can be rated up to 3000 pounds per square inch (psi). Typical uses include MIG welding gas mixtures, cryogenics, non-toxic gas distribution, medical gas distribution, and emergency oxygen services. In addition to any gas specific hazards, high pressure gases should carry the following hazard label : CAUTION: HIGH PRESSURE GAS
c) Oxidizing gases are non-flammable gases (e.g., oxygen chlorine, fluorine and nitrous oxide), but in the presence of an ignition source and fuel can support and vigorously

accelerate combustion. Do not use oil in any apparatus where oxygen will be used. Gauges and regulators for oxygen shall bear the warning “OXYGEN - USE NO OIL.”

Toxic and Highly Toxic Gases

The following information applies to the use of toxic and highly toxic gases:

a) All gases with a NFPA Health Hazard rating of 3 or 4 must be stored and used in accordance to applicable regulations.
b) Unless otherwise indicated, all gases must be stored in a continuously mechanically ventilated gas cabinet, fume hood or other enclosure.
c) Small quantities (e.g., lecture cylinders) or dilute concentrations of these gases may be stored outside of a ventilated enclosure with the approval of site management and the safety officer.
d) Audible alarms should be utilized in ventilated hoods that are dedicated to toxic gas usage or storage.
e) Standard Operating Procedures (SOP’s) for processes or procedures which use corrosive, toxic or highly toxic gases shall be developed that include emergency response actions. All affected **PNT Consulting LLC** employees shall be trained on the contents of these procedures.

Gas Cylinder Disposal

a. The following information applies to the disposal of compressed gas cylinders:
b. If possible, purchase compressed gas only from manufacturers that will agree to take back the empty cylinder.
c. A cylinder is considered empty when the container pressure is at atmospheric pressure.
d. Refillable cylinders should be returned to materials handling personnel or directly to the vendor.
e. If a refillable cylinder is encountered that does not have a manufacturer label, contact materials handling personnel to see if they can identify the manufacturer through stamp marks on the cylinder.
f. Maintain manufacturer labels and label the cylinder with an “Empty” or “MT” tag.
g. Materials handling personnel or the vendor should be contacted for disposal of partially full cylinders.
h. Proper identification of the contents of all cylinders is required and is the responsibility of the cylinder owner.
i. Disposal fees for unknown cylinders is the contractors expense.

Handling Compressed Gas Cylinder Leaks and Emergencies

Compressed Gas

Preplanning: Despite strict adherence to safety practices, accidents involving gases may occur in the work site. The amount of damage sustained by personnel and property from these accidents will be directly related to the quality of the sites emergency plan and procedures. Users of compressed gas cylinders must be familiar with necessary safety precautions. Standard Operating Procedures (SOPs) for using compressed gases shall include a discussion of possible accident scenarios, appropriate employee responses and should take into account the following factors:

1. The nature of the operation (e.g., equipment used and type of injury that might be inflicted corridor or storage area, on a table, in a hood or on the floor).
2. The potential location of a release or spill (e.g., outdoors versus indoors, in a laboratory, corridor or storage area, on a table, in a hood or on the floor).
3. The quantities of material that might be released and the type of containment (i.e., compressed gas tank size, manifold systems, etc.).
4. The chemical and physical properties of the compressed gas (e.g., its physical state, vapor pressure and air or water reactivity).
5. The hazardous properties of the compressed gas (e.g., its toxicity, corrosivity and flammability).
6. The availability and locations of emergency supplies and equipment.
7. A contingency plan which identifies building evacuation routes, emergency telephone numbers, chemical containment procedures, fire extinguisher usage, etc., should be posted in the worksite.

Minor Leaks

Occasionally a gas cylinder or one of its component parts may develop a leak. Most of these leaks occur at the top of the cylinder in areas such as the valve threads, pressure safety device, valve stem and valve outlet. The following information applies to the remediation of minor leaks:

1. If possible, verify suspected leaks using a flammable gas detector or soapy water solution (a flame should not be used for detection). **If the leak cannot be stopped by tightening a valve gland or packing nut, emergency action procedures should be initiated and site safety and management should be notified.**
2. For flammable, inert or oxidizing gases, move the cylinder to an isolated, well-ventilated area away from combustible materials. Post signs that describe the hazard.
3. For corrosive and toxic gases, move the cylinder to an isolated, well-ventilated area and use suitable means to direct the gas into an appropriate chemical neutralizer. Post signs that describe the hazards.

4. If it is necessary to move a leaking cylinder through populated portions of the building, place a plastic bag, rubber shroud or similar device over the top and tape it (duct tape preferred) to the cylinder to confine the leaking gas.

Major Leaks

In the event of a large gas release or if an accident takes place in which readily available personal protective equipment (PPE) is inadequate to ensure worker safety, **activate the following Emergency Procedures**:

1. **Immediately call 911** and report the incident.
2. Activate building and area fire alarms (or chemical safety alarms if applicable).
3. Evacuate the area, securing entrances and providing assistance to others on the way out.
4. Provide emergency response officials with details of the problem upon their arrival.

Accidents Involving Personnel Injury

1. For medical emergencies, call the site emergency response number or 911.
2. Assist persons involved and administer immediate first aid which may include:
3. Washing under a safety shower (in case of burning clothing or chemical exposures).
4. Removing contaminated clothing.
5. Irrigating the eyes at an eyewash.
6. Administering artificial respiration.
7. Notify personnel in adjacent areas of any potential hazards (e.g., activate building or area alarms).
8. Move injured personnel only if necessary to prevent their exposure to further harm.

Fire and Fire-Related Emergencies

For all fires, immediately call the site emergency response number or 911

Small isolated fires within the laboratory may be extinguished using the appropriate portable fire extinguisher if personnel are confident that they can safely extinguish the fire. Additional information on fire extinguisher use is contained in the site safety plan. For large or rapidly spreading fires, the following procedures should be followed:

a) Call the site emergency response number or 911 to report the fire.
b) Activate building and area alarms.
c) Evacuate the building, shutting doors and providing assistance to others on the way out.
d) Provide fire or police officials with the details of the problem upon their arrival.

.

Concrete AMP Masonry

PURPOSE

The purpose of this procedure is to provide safety guidelines for masonry and concrete construction, and to protect employees and property from harm when these are conducted.

The objective of this procedure is to prevent incidents related to masonry and concrete construction performed by employees of **PNT Consulting LLC**.

Cutting, Coring and Drilling operations will adhere to the Hot Work Program

SITE PREPARATION

Before erecting formwork or shoring the surface area in which the formwork or shoring will be placed will be prepared to receive the load that will be imposed on its surface. The existing ground will be level and thoroughly compacted before erecting formwork and shoring to prevent settlement.

The site layout will simplify the erection and taking apart of formwork and shoring, moving equipment (including ready-mix trucks), concrete pumps, canes, and the storage of reinforcement steel, formwork, and shoring.

Electrical hazards (overhead power lines and temporary power) in the work area will be identified and the local power company consulted to set up safe clearance distances or to move the utilities.

Whenever possible, formwork and shoring will be roped off from other work (such as excavation or pile driving).

REINFORCING STEEL

Reinforcing steel for walls, piers, columns, and similar structures will be laterally supported to resist overturning. The lateral supports for reinforcing steel will be capable of withstanding the force that will be applied to them during construction.

Bundles of reinforcing steel moved by crane will be securely tied together to prevent slipping. Steel over 20 feet long will be handled by two-part slings.

Exposed rebar, onto or into which workers could fall, will be covered to remove the hazard of impalement. Reinforced plastic cap coverings will be during construction.

Reinforced plastic cap coverings will be used for impalement protection. Wooden troughs or other substantial material may also be used to cover any vertically protruding rebar.

When working more than 6 feet above any close working surfaces, placing and tying reinforcing steel in walls, piers, columns, etc., workers must use a personal fall arrest system as set forth in Company safety procedure (Fall Prevention & Protection). Position devices for rebar work will be rigged so a worker cannot free fall more than 2 feet. The positioning device will be secured to an anchorage capable of

supporting at least twice the potential impact load of the worker's fall or 3,000 pounds, whichever is greater.

Reinforcing mats used as walkways will be provided with planking to provide safe footing.

Reinforcing steel will not be used as guy attachments at dead men or other anchorage points and will not be used for scaffolding hooks, stirrups, or as a load-bearing member of any lifting device.

Wire mesh reinforcing mats will be secured at each end or the roll turned over to prevent recoiling action. Unrolled wire mesh will be secured on each side of a proposed cut before cutting the mesh.

No workers, except those essential to post-tensioning operations, will be allowed to be behind the jack during tensioning. Signs and barricades will be erected to limit workers access to post-tensioning areas during tensioning.

VERTICAL SHORING

Before erection, shoring equipment will be inspected by the concrete contractor to verify that it conforms to the equipment named in the shoring layout. Unauthorized changes or substitution of equipment will not be made unless the designer has approved the change or substitution.

The manufacturer's specification for fabricated shoring will be available at the job site during the planning and execution.

Erecting shoring will be under the supervision of an experienced and competent person.

Shoring equipment will be inspected following the manufacturer's procedures. Metal frame shoring equipment and accessories will not be used if excessively rusted, bent, dented, re-welded beyond the original factory weld locations, or if they have broken welds or other defects. Each part will be in good working order and in a condition similar to that of original manufacture. Damaged shoring equipment will not be used for shoring. Any part which cannot be brought into

proper alignment or contact with the part, into or onto which it is intended to fit, will be "Red-Tagged", removed and replaced.

Erected shoring equipment will be inspected by the contractor immediately before, during, and immediately after the placement of concrete to decide the shoring equipment meets the needs named on the formwork drawings. Acceptable shoring will be "Green-Tagged". Any shoring found to be damaged or weakened must be immediately reinforced or re-shored.

Re-shoring will be provided when necessary to safely support slabs and beams after stripping or whenever the concrete is required to support loads in excess of it capacity.

Temporary storage of reinforcing rods, materials, or equipment on top of formwork is banned unless these temporary structures have been designed or strengthened to support the added loading. Eccentric loads on

shore heads and similar members will be restricted unless these members are designed for such loads.

FRAME SHORING

Frame shoring (tubular welding and tube and coupler) will not be loaded beyond the safe working load recommended by the manufacturer. Frame shoring will be designed with a minimum safety factor of 2.5.

Locking devices on frames and braces will be in good working order; coupling pins will align the frame or panel legs; pivoted cross braces will have their center pivot in place and parts will be in good serviceable condition. Couplers (tube and couple shoring) will be of a type metal such as drop-forged steel, malleable iron, or structural grade aluminum; gray cast iron will not be used. Couplers that are deformed, broken, or have defective or missing threads or bolts will not be used. Frames and braces found to be defective or damaged will be “Red-Tagged” and removed from service.

Following erection, a thorough inspection will be made to verify that:

- The shoring has been erected as shown on the layout drawing
- Spacing between towers and cross brace spacing does not exceed that shown on the layout, and that all-locking devices are in the closed position
- The devices for attaching the external lateral stability bracing is securely fasten to the legs of the shoring frame
- Interlocking tubular members and coupling are properly installed and tightened
- Base plates, shore heads, extension devices, or adjustment screws are in firm contact with the footing sill and the form
- Acceptable shoring will be “Green-Tagged”

The following general safety precautions will apply to frame shoring:

- Follow the shoring layout drawing and do not omit needed parts
- Do not exceed the shore frame spacing or tower heights as shown on the shoring layout
- The shoring load must be carried on all legs
- Plumb and level shoring frames as the erection continues, and check plumb and level of shoring towers just before pour.
- Do not force braces on frames to fit-level the shoring towers until proper fit can be made easily
- Tie high towers of shoring frames together with sufficient braces to make a rigid, solid unit. Shoring must always be secured when the height of the shoring towers exceeds four times the minimum base width. California (and other states) require a height-to-minimum base width ratio of three to one (3:1). Refer to the governing codes for your job location
- Exercise caution in erecting or taking apart freestanding shoring towers to prevent tipping
- Do not climb cross braces
- Use screw jacks to adjust for uneven grade conditions, to level and accurately position the falsework, and to aid stripping

- Do not exceed the manufacturer's recommended maximum extension of screw jacks. Keep screw jack extensions to a minimum for maximum load carrying capacity
- Make certain that screw jacks are firmly in contact with the foundation and frame legs
- Screw jacks will not be used to raise formwork during concrete placement

SINGLE-POST SHORES

Single-post shoring layout will provide for the maximum intended loading with a minimum safety factor of three. When single-post shores are to be used in more than one tier, they will be designed and inspected by a registered structural engineer.

Single-post shores will be horizontally braced in both the longitudinal and transverse directions, and will also be braced diagonally. The bracing will be installed as the shores are being erected.

Single-post shoring layouts will be horizontally braced in both the longitudinal and transverse directions, and will also be braced diagonally. The bracing will be installed as the shores are being erected.

Single-post shores and adjusting devices will be inspected before use. Fabricated shores and adjusting devices will not be used if heavily rusted, bent, dented, re-welded, damaged, or deficient in any manner. Timber shores and timber components of fabricated shores will not be used if split, knotted, broken, or otherwise structurally deficient.

Base plates and shore heads of single-post shores will be in firm contact with the footing sill and the form material.

Adjustment of single-post shores will not be made after the concrete is in place.

RELEASING AND MOVING FORMS

Forms will be securely attached to wire rope slings, having a minimum safety factor of eight, when raised or moved by crane or other mechanical lifting devices. Panels and form sections will be equipped with hoisting brackets or attachments for slings.

Loose tools and materials will be removed before moving the forms. Taglines for controlling forms will be used whenever necessary to protect workers or structures.

Workers are not allowed to ride forms or form scaffolding being raised or moved.

Vertical and overhead forms will not be released until adequately braced or secured. Workers at lower levels exposed to falling materials will be removed to a safe area before release or moving forms.

Forms, shores and bracing (except those used for slab on grade and slipforms) will not be removed until the concrete has gained enough strength as listed in the contract specifications or shown on the form drawings.

CONCRETE TOOLS and CONVEYANCE SYSTEMS

Concrete buckets will have positive safety latches or similar safety devices installed to prevent premature or accidental dumping. Manually operated gates will be of the self-closing type. Riding the concrete bucket is restricted. Raised concrete buckets will be routed so no worker, or the fewest number possible, are exposed to the hazard of falling concrete buckets. A appointed signal person will provide direction to the crane operator using the standard hand signals or radio communications that are common to the industry. Cranes and rigging must comply with the Company policies outlined in Company safety procedure (Cranes) as well as the regulations of the Occupational Safety and Health Administration (OSHA).

Handles on bull floats used where they can contact energized electrical conductors must be made of nonconductive material or insulated with a nonconductive sheath that will protect the operation from electrical shock.

Powered and rotating type concrete troweling machines that are manually guided must be equipped with a control switch that has a positive mechanical release (dead-man switch) that automatically stops trowel rotation when the operator removes his and her hand from the equipment handle.

Handles of concrete buggies must not extend beyond the wheels on either side of the buggy. Motorized concrete buggies will be equipped with a dead-man control switch and knuckle guards. Stop-checks will be used at all places where buggies dump.

Runways will be of sturdy construction, evenly supported and will have a smooth running surface and curbs (2" x 2" or 4" x 4"). Where necessary, runways will have a railing high enough on the open side to protect workers. If a single runway is used, turnarounds will be provided. Buggies will be routed in a continuous loop to lessen the danger of collision.

Sections of trimies and similar concrete conveyances will be secured with wire rope or equivalent material as well as the regular coupling. Cup-type couplings using flanges with the same outer diameter as pipe are restricted.

Concrete trucks must not travel through the job site with the chute extended. When unloading on a slope, the wheels of the concrete truck will be blocked and the brakes set to prevent movement.

Concrete mixers with one cubic yard or larger loading skips will be equipped with a mechanical device to clear the skip of material. Skip clearing will not be performed by a worker standing under or near a raised skip while striking it with a handheld tool. Guardrails will be provided on each side of the dangerous area under the raised skip

Grid-guards will be installed on all motor, plaster or fireproof mixers of one yard capacity or smaller. Any guards will be in place before the mixer is ran. The mixer will be locked out when work (i.e., clean out) is performed on the mixer.

Bulk cement storage structures will be equipped with conical or tapered bottoms, and mechanical or pneumatic means of starting the flow of material. No worker will be allowed to enter storage facilities unless the ejection system has been shut down, locked out and tagged to suggest the ejection system is not to be worked.

Masonry saws will be guarded with a semicircular enclosure over the blade.

No worker will be allowed to perform maintenance or repair activities on equipment (i.e., mixers, screens or pumps used for concrete and masonry construction) where the unplanned operation of the equipment could occur and cause injury, unless all known potentially hazardous energy sources have been locked out and tagged.

CONCRETE PUMP TRUCKS

Concrete pump trucks and parts (pump, boom, piping) will be inspected by the manufacturer's instructions and found to be in safe working condition. Concrete pumps will be equipped with an emergency shut off.

Trucks will be positioned so any obstacles (power lines, ditches, walls, and columns) do not interfere with safe operation. Whenever possible, at least 17 feet clearance will be kept from power lines. Never less than 10 feet of clearance will ever occur.

Visual communication between the pump operator and the placement area will be kept, or a signalperson will be used to assume safe placement of concrete.

Outriggers must be extended and locked into place and kept away from un-supportive surfaces. Pads or dunnage will be used as necessary to stabilize the crane. Raised tires will be blocked to prevent unnecessary bouncing or rolling.

The boom must never be allowed to contact deck forming or near structures.

Clamps, pipe, safety straps, and restraining devices on hoses suspended from booms will be inspected. Cup-type couplings using flanges with same outer diameter as pipe are restricted.

Concrete pumps will not be worked unless the hopper is guarded. Workers will not place hands or objects in the hopper unless it is locked out.

Pumping line clean out operation must conform to the manufacturer's needs and will be conducted in a named area. The use of the compressed air procedure for cleaning pumping lines is restricted.

MASONRY CONSTRUCTION

A limited-access zone will be set up whenever a masonry wall is being built. The limited-access zone will be set up before building the wall and will be equal to the height of the wall being built, plus four feet, and will run the entire length of the wall.

The limited-access zone will be set up on the side of the wall opposite the scaffolding.

Employees who are building the wall the may enter the limited-access zone, but will not allow other employees to enter. The limited-access zone will remain in place until the wall is adequately supported to prevent overturning or collapse.

Masonry walls over eight feet in height will be adequately braced and supported so they will not overturn or collapse. Limited-access zones and bracing will remain in intact until permanent supporting elements of the structure are in place.

Scaffolding for masonry construction will meet or exceed the needs of 29 CFR 1926 Subpart L and Company safety procedure (Scaffolds).

HEALTH HAZARD

The cutting, grinding, drilling and finishing of concrete and masonry poses a potential silica dust hazards. Each employer must warn employees about the hazards posed by silica dust. Where concrete tools (jackhammers, masonry saws, grinders, etc.) disturb masonry and concrete products, engineering or work practice controls must be implemented to reduce (silica) dust.

When engineering or work practice controls are not possible, employees exposed to dust will use respiratory protection. Suggested engineering controls and work practice controls for preventing silica dust is as follows:

- Post Warning Signs
- Employ wet methods
- Connect the tool to a point-of-operation dust collection system
- Limit the number of workers in the work area (workers who are in the area must use respiratory protection)
- Contain the work area with barricades and similar devices
- Use a ventilation system that removes and collects dust (workers in containment must use respiratory protection). Point exhaust away from other workers

Concrete and masonry cement is irritating to the eyes and skin. Protective equipment such as gloves, rubber boots, kneepads, and protective eyewear must be used when handling concrete. Washing with soap and water is important to prevent skin irritation. Hands will not be washed in a bucket of water used for moistening and washing concrete tools.

Safety data sheets (SDS) will be available for concrete and masonry products that will be used or disturbed. Also, SDSs are needed for form-release agents, concrete additives or cure agents. All containers will be labeled.

TRAINING

Concrete AMP Masonry

Employees working with or near concrete and masonry operations may not work until the following training has been completed and documented.

- Concrete Operation and Safety Procedures
- Proper tool use, inspection and maintenance
- Health Hazards associated with concrete and masonry
- Required PPE and clothing
- Sanitation and Decontamination Procedures
- Hazard Communication
- Fall Protection
- Vehicle Safety
- Access Zones and Traffic Control

Confined Space Awareness

Policy

This program is intended for "Awareness Level" purposes. Systems shall be utilized to ensure the safety of employees who are required to enter confined spaces. Only those **PNT Consulting LLC** employees who have received specifically required training and certification on confined space entry shall be allowed to enter and/or attend a confined space. This program will be reviewed annually by the Corporate Director of Health and Safety, and revised as necessary.

This policy covers minimum performance standards applicable to all* PNT Consulting LLC *Associates employees and locations. Local practices requiring more detailed or stringent rules, or local, state or other federal requirements regarding this subject can and should be added as an addendum to this procedure as applicable.

Purpose

To set forth procedures for the safe entry to confined spaces.

Scope

Applies to all **PNT Consulting LLC** Associates work sites, i.e., **PNT Consulting LLC** offices, client job sites, etc., involving confined space entry.

Definitions

Attendant means an individual stationed outside permitted confined spaces that monitors the authorized entrants and who performs all attendants' assigned duties.
Authorized Entrant means an individual who is authorized to enter a confined space.
Blanking or blinding means an absolute closure of a pipe, line, or duct by the fastening of a solid plate (such as a spectacle blind or a skillet blind) that completely covers the bore and that is capable of withstanding the maximum pressure of the pipe, line, or duct with no leakage beyond the plate.
Confined space means a space that is large enough and so configured that an individual can enter and perform assigned work; has limited or restricted means for entry or exit (for example, tanks, vessels, silos, storage bins, hoppers, vaults, and pits are spaces that may have limited means of entry.); and is not designed for continuous occupancy. A permit required confined space has one or more of the following characteristics:

- Contains or has a potential to contain a hazardous atmosphere
- Contains a material that has the potential for engulfing an entrant

- Has an internal configuration such that an entrant could be trapped or asphyxiated by inwardly converging walls or by a floor which slopes downward and tapers to a smaller cross- section

- Contains any other recognized serious safety or health hazard

Confined Space Permit means a written or printed document that allows persons to enter into a permitted confined space.
Double block and bleed means the closure of a line, duct, or pipe by closing and locking or tagging two in-line valves and by opening and locking or tagging a drain or vent valve in the line between the two closed valves.
Emergency means any occurrence (including any failure of hazard control or monitoring equipment) or event internal or external to the permitted confined space that could endanger entrants.
Engulfment means the surrounding and effective capture of a person by a liquid or finely divided (flowable) solid substance that can be aspirated to cause death by filling or plugging the respiratory system or that can exert enough force on the body to cause death by strangulation, constriction, or crushing.
Entry means the action by which a person passes through an opening into a permit-required confined space. Entry includes ensuing work activities in that space and is considered to have occurred as soon as any part of the entrant's body breaks the plane of an opening into the space.
Entry supervisor means the person responsible for determining if acceptable entry conditions are present at a permitted confined space where entry is planned, for authorizing entry and overseeing entry operations, and for terminating entry as required by this section. An entry supervisor may also be acting as an attendant.
Hazardous atmosphere means an atmosphere that may expose persons to the risk of death, incapacitation, impairment of ability to self-rescue (that is, escape unaided from a permit space), injury, or acute illness.
Line breaking means the intentional opening of a pipe, line, or duct that is or has been carrying flammable, corrosive, or toxic material, an inert gas, or any fluid at a volume, pressure, or temperature capable of causing injury.
Permit-required confined space program (permit space program) means the employer's overall program for controlling, and, where appropriate, for protecting employees from, permit space hazards and for regulating employee entry into permit spaces.
Permit system means a written procedure for preparing and issuing permits for entry and for returning the permit space to service following termination of entry.

Prohibited condition means any condition in a permit space that is not allowed by the permit during the period when entry is authorized.

Oxygen deficient atmosphere means an atmosphere containing less than 19.5 percent oxygen by volume.

Oxygen enriched atmosphere means an atmosphere containing more than 23.5 percent oxygen by volume.

Rescue service means the personnel designated to rescue employees from permit spaces.

Retrieval system means the equipment (including a retrieval line, chest or full-body harness, wristlets, if appropriate, and a lifting device or anchor) used for non-entry rescue of persons from permit spaces.

Testing means the process by which the hazards that may confront entrants of a permit space are identified and evaluated. Testing includes specifying the tests that are to be performed in the permit space.

Requirements

General

Employees shall be informed of identified permit required confined spaces for the work site as they are identified.

Only authorized personnel may be permitted to enter a permit required confined space.

Danger signs or other equivalent means shall be used to warn of existing confined spaces that are accessible by employees and others. The wording shall be " DANGER-PERMIT-REQUIRED CONFINED SPACE, DO NOT ENTER" or other equivalent language.

Required safety equipment shall be at the confined space work area, in working order, and instruments calibrated.

Initial Evaluation of Confined Spaces

Confined spaces shall be considered as permit required confined spaces until a competent person conducts an initial evaluation of the work site to identify permit required confined spaces. Confined spaces shall be classified as follows:

- Non Hazardous
- Hazardous due to work task

- Hazardous due to internal condition

If the work site contains permit required confined spaces, danger signs stating "DANGER - CONFINED SPACE - ENTER BY PERMIT ONLY" or equivalent shall be posted to inform employees of the existence and location of the spaces. Bilingual signs shall be posted as necessary.

Reclassification or Canceling of Permit Required Spaces

Permit required confined spaces shall be reclassified as non-permit spaces under the following circumstances:

- The space has no actual or potential atmospheric hazards and if hazards within the space are eliminated without entry into the space
- If testing and inspection during entry demonstrates that the hazards within the space have been eliminated and remain eliminated
- If a hazard returns, personnel shall evacuate the space and the space shall be reevaluated
- If new hazards are identified that are not part of the original permit, personnel shall immediately evacuate the space and the confined space shall be re-evaluated
- Cancelled permits shall be kept on file for a period of at least 12 months and reviewed to determine problems encountered.

Confined Space Entry Form

The responsible supervisor shall ensure that a Confined Space Entry Form is completed prior to the entry of any permit required confined space. Completion of this form involves the following activities:

- Assessing hazards
- Atmospheric testing
- Identification of qualified entrants

- Identification of attendant(s).
- Identification of entry supervisor
- Establishment of Rescue method and Rescue Service
- De-energizing systems
- Cleaning of confined spaces
- Types of equipment required
- Hazards that may be generated through work activities
- Communication methods
- Entrants are qualified

Confined Space Permits are valid for the work period or work shift and become void and shall be reissued when:

- There is an unplanned interruption in the work process
- The surrounding conditions change that introduce a new hazard
- Personnel leave the space to perform other work
- The work space is left unattended
- The work period (normal time a person or crew is scheduled to work during that day) ends
- When new crew assumes the work assignments of the existing work crew

Permits are not void during any single work period when crewmembers are added to the existing crew or when crewmembers are replaced on a planned rotational basis and the provisions of the permit are met including training and instructions.

Permits become void when the scope of work exceeds the definition of work defined on the permit, and when work is required to be completed that is not covered by the permit. Confined Space Permits shall be posted at the confined space work area until the work is completed. At the conclusion of work, the permit shall be returned to the issuer (i.e. Entry Supervisor, client, etc.).

Completed confined space permits shall be kept for a minimum of 12 months and until a review of the confined space permit program is completed.

Atmospheric Testing

Atmospheric conditions of a confined space shall be tested with calibrated equipment prior to entry of personnel and as identified by the Initial Evaluation of Confined Spaces (5.2 of this section). Atmospheric testing shall be completed as indicated below and recorded on the Entry Permit:

- Oxygen content shall be tested. The acceptable range is 19.5 to 23.5 percent
- Test for combustible gas and vapors. Acceptable range is 0 to 10 percent of the Lower Flammable Limit (or Lower Explosive Limit). Record readings on the Entry Permit
- Check for toxic gases and airborne combustibles (i.e. dusts) as identified by the initial determination of confined spaces
- Entrants and/or attendants may request additional monitoring at any time

See testing equipment requirements under the Industrial Hygiene section (23) of this manual.

Pre Entry (occurring prior to entry)

Only those persons receiving specifically required training and certification on confined space entry shall be allowed to enter and/or attend a confined space. This training shall be documented at orientation. Annual refresher training shall be conducted for all applicable **PNT Consulting LLC** personnel to include emergency rescue drills.

Persons who enter confined space, Attendant(s), and Entry Supervisor shall receive the following minimum instructions concerning the confined space:

- How to recognize symptoms of the specific potential hazards of the confined space
- The consequences of exposure to potential hazards
- When to evacuate the confined space
- Adhering to instruction of the Attendant
- Evacuating when alarms sound

- How communications will be maintained
- What to do if an exposure occurs or there is a release of a substance
- Shutting off tools during an emergency

Sources of energy or contaminants shall be controlled, such as:

- Electrical energy
- Pressurized systems such as pipelines and vessels are isolated through double blocking, blinding, bleeding, and depressurization
- Extreme heat and extreme cold conditions

Pre-entry atmospheric testing shall be completed

The method of ventilating the confined space shall be established

The approved tools shall be identified and staged at or near the entry point of the confined space. Tools, electrical tools and lighting systems shall be approved for use in confined spaces as identified by the Initial Evaluation of confined spaces

Depending upon the Pre-Job Assessment (lighting and electrical equipment may be either low voltage (50V or less), or conventional 120V portable lamps and tools if powered by approved ground-fault circuit interrupter devices and the work is not an electrically hazardous location. Pneumatic equipment may be used instead of electrical equipment.

Required rescue procedures and rescue equipment that shall be staged at the confined space

The safe methods to enter, exit, and escape for personnel (including rescue personnel during retrieval) working in a permit-required confined space shall be developed during the job planning phase, specified on, and included, as needed, on the entry permit.

Personnel have been issued required personal protective equipment (PPE).

Ventilation of Confined Spaces

Powered ventilation shall occur before entry into permit-required confined space and continue until after the employees have left the space. Layout of ventilation equipment will be made in such a manner that the air is being sent throughout the entire confined space. Forced air ventilation shall come from a clean source and may not increase hazards.

Air hoses with diffusers may not be used to provide forced ventilation.

Air sampling shall be conducted prior to personnel entry to assure the safety of the space and periodic air sampling shall be continued thereafter in the space when forced ventilation is used.

Forced ventilation may be used to:

- To remove contaminants created by work activities such as welding
- As a method of maintaining controlling the ambient temperature of a confined space when the rise in temperature is cause by atmospheric conditions.

Ventilation shall occur only by forcing air into a confined space. If it is necessary to exhaust hazardous gases, such as those produced when welding, the air being forced into the confined space shall be increased by at least the amount that is being exhausted out of the space.

Performance of Work

The confined space attendant shall remain at the entry point of the confined space while personnel are inside any permit required confined space.

The confined space attendant shall ensure that only authorized personnel enter the confined space.

Confined space attendants shall not perform any other work activities except that they may also serve as the attending supervisor.

Confined space attendants shall only monitor a single confined space, unless entry points to subsequent confined space(s) are immediately adjacent and are under the direct control of the attendant.

If an emergency or other unplanned event takes place during the course of work the Confined Space Work Permit is void.

The Attendant and Entry Supervisor have the authority to discontinue work activities at any time.

Compressed gas cylinders other than a self-contained breathing apparatus should not be taken into a confined space.

The hoses of gas cutting and welding tools shall be inspected for leaks prior to taking them into any confined space.

Persons who enter confined spaces shall comply with the provisions of this standard and the confined space permit. This includes:

- Supervisors
- Inspectors
- Surveyors
- Observers
- Scaffold Builders
- Engineers
- Vendors
- Contractors, subcontractors, and other employers

Sources of ignition (e.g., flame. arc, or spark) shall not be permitted in any confined space until tests have ensured that the percentage of combustible/flammable gas or vapor is not more than zero (0) % of the Lower Explosive Limit (LEL).

Emergencies

Emergency Notification

It is the responsibility of the Entry Supervisor and/or the Entry Attendant to immediately notify the senior **PNT Consulting LLC** employee on the worksite of a potential emergency by radio or cell phone. The senior **PNT Consulting LLC** employee will assess the situation and contact emergency response personnel if applicable.

Only those individuals trained and certified in confined space entry procedures on the worksite may assist in emergency rescue operations.

Rescue / Retrieval Systems

To facilitate emergency rescue, retrieval systems or methods shall be used whenever an authorized entrant enters a confined space, unless the retrieval equipment would increase the overall risk of entry or would not contribute to the rescue of the entrant.

The entry supervisor, prior to the initial entry of personnel into a confined space, shall ensure the rescue equipment and retrieval system is functioning properly.

Retrieval systems shall meet the following requirements to the greatest extent possible.

- Each authorized entrant shall use a full body harness with a retrieval lifeline attached at the center of the entrant's back near shoulder level, or above the entrant's head or safety coveralls with built-in harness, with a retrieval lifeline attached at the near shoulder level of the entrant's back, or above the entrant's head
- Wristlets may be used in lieu of the full body harness if the entry supervisor can demonstrate that the use of a full body harness is not feasible or creates a greater hazard and that the use of wristlets is the safest and most effective alternative
- The other end of the retrieval line shall be attached to a mechanical device or fixed point outside the confined space in such a manner that rescue can begin as soon as the rescuer becomes aware that rescue is necessary. A mechanical device shall be available to retrieve personnel from vertical type confined spaces more than 5 feet deep
- The safety harness shall be of the type that permits easy rescue of personnel from the confined space during emergency conditions and may be either the harness type that suspends a person in an upright positon or the wrist type rescue harness. (A hoisting device or other effective means for lifting personnel from confined spaces is preferred)
- Lifelines shall have a minimum breaking strength of 5,400 pounds

Completion of Work

Confined Space Awareness

When the work is completed in a confined space the following, as a minimum shall be completed:

- Tools, equipment and materials shall be removed
- The area surrounding the confined space shall be clean of materials, equipment, scraps, and debris
- The supervisor responsible for the confined space work shall inspect the work location to ensure cleanup of materials, tools, and other items is complete
- (Lockout) locks are removed only when work is completed

Confined Space Entry

Policy

Systems shall be utilized to ensure the safety of employees who are required to enter confined spaces. Only those **PNT Consulting LLC** employees who have received specifically required training and certification on confined space entry shall be allowed to enter and/or attend a confined space. This program will be reviewed annually by the Corporate Director of Health and Safety, and revised as necessary.

This policy covers minimum performance standards applicable to all company associates, employees and locations. Local practices requiring more detailed or stringent rules, or local, state or other federal requirements regarding this subject can and should be added as an addendum to this procedure as applicable.

Purpose

To set forth procedures for the safe entry to confined spaces.

Scope

Applies to all company employees, associates, work sites, etc., involving confined space entry.

Definitions

Attendant means an individual stationed outside permitted confined spaces that monitors the authorized entrants and who performs all attendants' assigned duties.

Authorized Entrant means an individual who is authorized to enter a confined space.

Blanking or blinding means an absolute closure of a pipe, line, or duct by the fastening of a solid plate (such as a spectacle blind or a skillet blind) that completely covers the bore and that is capable of withstanding the maximum pressure of the pipe, line, or duct with no leakage beyond the plate.

Confined space means a space that is large enough and so configured that an individual can enter and perform assigned work; has limited or restricted means for entry or exit (for example, tanks, vessels, silos, storage bins, hoppers, vaults, and pits are spaces that may have limited means of

entry.); and is not designed for continuous occupancy. A permit required confined space has one or more of the following characteristics:

- Contains or has a potential to contain a hazardous atmosphere
- Contains a material that has the potential for engulfing an entrant
- Has an internal configuration such that an entrant could be trapped or asphyxiated by inwardly converging walls or by a floor which slopes downward and tapers to a smaller cross- section
- Contains any other recognized serious safety or health hazard

Confined Space Permit means a written or printed document that allows persons to enter into a permitted confined space.

Double block and bleed means the closure of a line, duct, or pipe by closing and locking or tagging two in-line valves and by opening and locking or tagging a drain or vent valve in the line between the two closed valves.

Emergency means any occurrence (including any failure of hazard control or monitoring equipment) or event internal or external to the permitted confined space that could endanger entrants.

Engulfment means the surrounding and effective capture of a person by a liquid or finely divided (flowable) solid substance that can be aspirated to cause death by filling or plugging the respiratory system or that can exert enough force on the body to cause death by strangulation, constriction, or crushing.

Entry means the action by which a person passes through an opening into a permit-required confined space. Entry includes ensuing work activities in that space and is considered to have occurred as soon as any part of the entrant's body breaks the plane of an opening into the space.

Entry supervisor means the person responsible for determining if acceptable entry conditions are present at a permitted confined space where entry is planned, for authorizing entry and overseeing entry operations, and for terminating entry as required by this section. An entry supervisor may also be acting as an attendant.

Hazardous atmosphere means an atmosphere that may expose persons to the risk of death, incapacitation, impairment of ability to self-rescue (that is, escape unaided from a permit space), injury, or acute illness.

Line breaking means the intentional opening of a pipe, line, or duct that is or has been carrying flammable, corrosive, or toxic material, an inert gas, or any fluid at a volume, pressure, or temperature capable of causing injury.

Permit-required confined space program (permit space program) means the employer's overall program for controlling, and, where appropriate, for protecting employees from, permit space hazards and for regulating employee entry into permit spaces.

Permit system means a written procedure for preparing and issuing permits for entry and for returning the permit space to service following termination of entry.

Prohibited condition means any condition in a permit space that is not allowed by the permit during the period when entry is authorized.

Oxygen deficient atmosphere means an atmosphere containing less than 19.5 percent oxygen by volume.

Oxygen enriched atmosphere means an atmosphere containing more than 23.5 percent oxygen by volume.

Rescue service means the personnel designated to rescue employees from permit spaces.

Retrieval system means the equipment (including a retrieval line, chest or full-body harness, wristlets, if appropriate, and a lifting device or anchor) used for non-entry rescue of persons from permit spaces.

Testing means the process by which the hazards that may confront entrants of a permit space are identified and evaluated. Testing includes specifying the tests that are to be performed in the permit space.

Requirements

General
Employees shall be informed of identified permit required confined spaces for the work site as they are identified.

Only authorized personnel may be permitted to enter a permit required confined space.

Danger signs or other equivalent means shall be used to warn of existing confined spaces that are accessible by employees and others. The wording shall be “DANGER-PERMIT-REQUIRED CONFINED SPACE, DO NOT ENTER” or other equivalent language.

Required safety equipment shall be at the confined space work area, in working order, and instruments calibrated.

Initial Evaluation of Confined Spaces

Confined Space Entry

Confined spaces shall be considered as permit required confined spaces until a competent person conducts an initial evaluation of the work site to identify permit required confined spaces. Confined spaces shall be classified as follows:

- Non Hazardous
- Hazardous due to work task
- Hazardous due to internal condition

If the work site contains permit required confined spaces, danger signs stating "DANGER - CONFINED SPACE - ENTER BY PERMIT ONLY" or equivalent shall be posted to inform employees of the existence and location of the spaces. Bilingual signs shall be posted as necessary.

Reclassification or Canceling of Permit Required Spaces

Permit required confined spaces shall be reclassified as non-permit spaces under the following circumstances:

- The space has no actual or potential atmospheric hazards and if hazards within the space are eliminated without entry into the space
- If testing and inspection during entry demonstrates that the hazards within the space have been eliminated and remain eliminated
- If a hazard returns, personnel shall evacuate the space and the space shall be reevaluated
- If new hazards are identified that are not part of the original permit, personnel shall immediately evacuate the space and the confined space shall be re-evaluated
- Cancelled permits shall be kept on file for a period of at least 12 months and reviewed to determine problems encountered.

Confined Space Entry Form

The responsible supervisor shall ensure that a Confined Space Entry Form is completed prior to the entry of any permit required confined space. Completion of this form involves the following activities:

- Assessing hazards
- Atmospheric testing
- Identification of qualified entrants

- Identification of attendant(s).
- Identification of entry supervisor
- Establishment of Rescue method and Rescue Service
- De-energizing systems
- Cleaning of confined spaces
- Types of equipment required
- Hazards that may be generated through work activities
- Communication methods
- Entrants are qualified

Confined Space Permits are valid for the work period or work shift and become void and shall be reissued when:

- There is an unplanned interruption in the work process
- The surrounding conditions change that introduce a new hazard
- Personnel leave the space to perform other work
- The work space is left unattended
- The work period (normal time a person or crew is scheduled to work during that day) ends

- When new crew assumes the work assignments of the existing work crew

Permits are not void during any single work period when crewmembers are added to the existing crew or when crewmembers are replaced on a planned rotational basis and the provisions of the permit are met including training and instructions.
Permits become void when the scope of work exceeds the definition of work defined on the permit, and when work is required to be completed that is not covered by the permit.

Confined Space Permits shall be posted at the confined space work area until the work is completed. At the conclusion of work, the permit shall be returned to the issuer (i.e. Entry Supervisor, client, etc.).

Completed confined space permits shall be kept for a minimum of 12 months and until a review of the confined space permit program is completed.

Atmospheric Testing

Atmospheric conditions of a confined space shall be tested with calibrated equipment prior to entry of personnel and as identified by the Initial Evaluation of Confined Spaces (5.2 of this section). Atmospheric testing shall be completed as indicated below and recorded on the Entry Permit:

- Oxygen content shall be tested. The acceptable range is 19.5 to 23.5 percent

- Test for combustible gas and vapors. Acceptable range is 0 to 10 percent of the Lower Flammable Limit (or Lower Explosive Limit). Record readings on the Entry Permit

- Check for toxic gases and airborne combustibles (i.e. dusts) as identified by the initial determination of confined spaces (5.2 of this section). Safe operating levels can be determined from the Permissible Exposure Level (PEL) as listed in OSHA 29 CFR 1910.1000, applicable Material Safety Data Sheets (MSDSs) or as provided by the client

- Entrants and/or attendants may request additional monitoring at any time

Pre Entry (occurring prior to entry)

Only those persons receiving specifically required training and certification on confined space entry shall be allowed to enter and/or attend a confined space. This training shall be documented at orientation and verified before entry. Applicable refresher training shall be conducted for all applicable company personnel to include emergency rescue drills.

Persons who enter confined space, Attendant(s), and Entry Supervisor shall receive the following minimum instructions concerning the confined space:

- How to recognize symptoms of the specific potential hazards of the confined space
- The consequences of exposure to potential hazards
- When to evacuate the confined space
- Adhering to instruction of the Attendant
- Evacuating when alarms sound
- How communications will be maintained
- What to do if an exposure occurs or there is a release of a substance
- Shutting off tools during an emergency

Sources of energy or contaminants shall be controlled, such as:

- Electrical energy
- Pressurized systems such as pipelines and vessels are isolated through double blocking, blinding, bleeding, and depressurization
- Extreme heat and extreme cold conditions

Pre-entry atmospheric testing shall be completed.

The method of ventilating the confined space shall be established.

The approved tools shall be identified and staged at or near the entry point of the confined space. Tools, electrical tools and lighting systems shall be approved for use in confined spaces as identified by the Initial Evaluation of confined spaces.

Depending upon the Pre-Job Assessment (lighting and electrical equipment may be either low voltage (50V or less), or conventional 120V portable lamps and tools if powered by approved ground-fault circuit interrupter devices and the work is not an electrically hazardous location.

Pneumatic equipment may be used instead of electrical equipment.

Required rescue procedures and rescue equipment that shall be staged at the confined space.

The safe methods to enter, exit, and escape for personnel (including rescue personnel during retrieval) working in a permit-required confined space shall be developed during the job planning phase, specified on, and included, as needed, on the entry permit.

Personnel have been issued required personal protective equipment (PPE).

Persons who enter confined spaces shall be logged using the Confined Space Pre-Job Assessment Forms.

Ventilation of Confined Spaces

Powered ventilation shall occur before entry into permit-required confined space and continue until after the employees have left the space. Layout of ventilation equipment will be made in such a manner that the air is being sent throughout the entire confined space. Forced air ventilation shall come from a clean source and may not increase hazards.

Air hoses with diffusers may not be used to provide forced ventilation.

Air sampling shall be conducted prior to personnel entry to assure the safety of the space and periodic air sampling shall be continued thereafter in the space when forced ventilation is used.

Forced ventilation may be used to:

- To remove contaminants created by work activities such as welding

- As a method of maintaining controlling the ambient temperature of a confined space when the rise in temperature is cause by atmospheric conditions.

Ventilation shall occur only by forcing air into a confined space. If it is necessary to exhaust hazardous gases, such as those produced when welding, the air being forced into the confined space shall be increased by at least the amount that is being exhausted out of the space.

Performance of Work

The confined space attendant shall remain at the entry point of the confined space while personnel are inside any permit required confined space.

The confined space attendant shall ensure that only authorized personnel enter the confined space.

Confined space attendants shall not perform any other work activities except that they may also serve as the attending supervisor.

Confined space attendants shall only monitor a single confined space, unless entry points to subsequent confined space(s) are immediately adjacent and are under the direct control of the attendant.

If an emergency or other unplanned event takes place during the course of work the Confined Space Work Permit is void.

The Attendant and Entry Supervisor have the authority to discontinue work activities at any time.

Compressed gas cylinders other than a self-contained breathing apparatus should not be taken into a confined space.

The hoses of gas cutting and welding tools shall be inspected for leaks prior to taking them into any confined space.

Persons who enter confined spaces shall comply with the provisions of this standard and the confined space permit. This includes:

- Supervisors
- Inspectors
- Surveyors
- Observers
- Scaffold Builders
- Engineers
- Vendors
- Contractors, subcontractors, and other employers

Sources of ignition (e.g., flame. arc, or spark) shall not be permitted in any confined space until tests have ensured that the percentage of combustible/flammable gas or vapor is not more than zero (0) % of the Lower Explosive Limit (LEL).

Emergencies

Emergency Notification

It is the responsibility of the Entry Supervisor and/or the Entry Attendant to immediately notify the senior company employee on the worksite of a potential emergency by radio or cell phone (if allowed on site). The senior company employee will assess the situation and contact emergency response personnel if applicable.

Only those individuals trained and certified in confined space entry procedures on the worksite may assist in emergency rescue operations.

First Aid / Medical Services

Refer to the requirements in First Aid section for specific worksite requirements.

Rescue / Retrieval Systems

To facilitate emergency rescue, retrieval systems or methods shall be used whenever an authorized entrant enters a confined space, unless the retrieval equipment would increase the overall risk of entry or would not contribute to the rescue of the entrant.

The entry supervisor, prior to the initial entry of personnel into a confined space, shall ensure the rescue equipment and retrieval system is functioning properly.

Retrieval systems shall meet the following requirements to the greatest extent possible.

- Each authorized entrant shall use a full body harness with a retrieval lifeline attached at the center of the entrant's back near shoulder level, or above the entrant's head or safety coveralls with built-in harness, with a retrieval lifeline attached at the near shoulder level of the entrant's back, or above the entrant's head

- Wristlets may be used in lieu of the full body harness if the entry supervisor can demonstrate that the use of a full body harness is not feasible or creates a greater hazard and that the use of wristlets is the safest and most effective alternative

- The other end of the retrieval line shall be attached to a mechanical device or fixed point outside the confined space in such a manner that rescue can begin as soon as the rescuer becomes aware that rescue is necessary. A mechanical device shall be available to retrieve personnel from vertical type confined spaces more than 5 feet deep

- The safety harness shall be of the type that permits easy rescue of personnel from the confined space during emergency conditions and may be either the harness type that suspends a person in an upright position or the wrist type rescue harness. (A hoisting device or other effective means for lifting personnel from confined spaces is preferred)

- Lifelines shall have a minimum breaking strength of 5,400 pounds

Completion of Work

When the work is completed in a confined space the following, as a minimum shall be completed:

- Tools, equipment and materials shall be removed
- The area surrounding the confined space shall be clean of materials, equipment, scraps, and debris
- The supervisor responsible for the confined space work shall inspect the work location to ensure cleanup of materials, tools, and other items is complete
- (Lockout) locks are removed only when work is completed

References

OSHA 29 CFR 1910.146

Cranes & Hoisting Safety

PURPOSE & SCOPE

This program is intended to provide **PNT Consulting LLC** and/or Subcontracted Companies performing this type of work with a guideline for the safe operation, use and inspection of mobile cranes and hoists. This policy applies to wheel mounted cranes of both truck and self-propelled wheel type, and any variations thereof that retain the same fundamental characteristics used at company-controlled work locations where company employees are performing work.

Functional Description: Can hoist, lower and horizontally move a suspended load & Long List of Examples:

- *Articulating cranes (such as knuckle-boom cranes)*
- *Crawler cranes*
- *Floating cranes*
- *Cranes on barges*
- *Locomotive cranes*
- *Mobile cranes (such as wheel-mounted, rough-terrain, all-terrain, commercial truck-mounted, and boom truck cranes)*
- *Multi-purpose machines when configured to hoist and lower (by means of a winch or hook) and horizontally move a suspended load*
- *Industrial cranes (such as carry-deck cranes)*
- *Dedicated pile drivers*
- *Service/mechanic trucks with a hoisting device*
- *Crane on a monorail*
- *Tower cranes (such as fixed jib ("hammerhead boom"), luffing boom and self-erecting)*
- *Pedestal cranes*
- *Portal cranes*
- *Overhead and gantry cranes*
- *Straddle cranes*

- *Sideboom cranes*
- *Derricks*
- *and variations of such equipment*

DEFINITIONS

- *Accessory* -- A secondary part or assembly of parts which contributes to the overall function and usefulness of a machine.
- *Axis of Rotation* -- The vertical axis around which the crane superstructure rotates.
- *Base* -- The traveling base or carrier on which the rotating superstructure is mounted such as a car, truck, crawlers, or wheel platform.
- *Boom Angle* -- The angle between the horizontal and longitudinal centerline of the boom.
- The boom longitudinal centerline is a straight line between the boom foot pin (heel pin) centerline and boom point sheave pin centerline.
- *Boom Hoist* -- A hoist drum and rope reeving system used to raise and lower the boom. The rope system may be all live reeving or a combination of live reeving and pendants.
- *Boom* -- Member hinged to the front of the rotating superstructure with the outer end supported by ropes leading to a gantry or A-frame and used for supporting the hoisting tackle.
- *Boom Stop* -- A device used to limit the angle of the boom at the highest position.
- *Brake* -- A device used for retarding or stopping motion by friction or power means.
- *Cab* -- A housing which covers the rotating superstructure machinery and/or operator's station. On truck-crane trucks a separate cab covers the driver's station.
- *Clutch* -- A friction, electromagnetic, hydraulic, pneumatic, or positive mechanical device for engagement or disengagement of power.
- *Counterweight* -- A weight used to supplement the weight of the machine in providing stability for lifting working loads.
- *Crane Safe Work Permit* -- The permit issued by the Site Supervisor or Crane Competent

Person at the job site to the crane operator before any mobile hoisting work is performed.

- *Critical Lift* -- A lift where:
    - The load exceeds 80% of the crane's capacity.
    - Weight of the lift exceeds 50% of the load chart rating of the equipment being used and the lift is over power lines, process equipment, piping, or personnel are being lifted.
    - Two booms are required.
    - Poles or derricks have been erected.
    - Personnel are being lifted.
    - Crane is traveling with load.
    - Any lift in a Critical Lift Area.
- *Designated* -- Means selected or assigned by the Company or a representative of the Company as being qualified to perform specific duties.
- *Drum* -- Cylindrical members around which ropes are wound for raising and lowering the load or boom.
- *Dynamic* -- Means loads introduced into the machine or its components by forces in motion for hoisting and lowering loads.
- *Gantry* -- Structural frame, extending above the superstructure, to which the boom support ropes are reeved.
- *Jib* -- An extension attached to the boom point to provide added boom length for lifting specified loads. The jib may be in line with the boom or offset to various angles.
- *Load (working)* -- Means the external load, in pounds, applied to the crane, including the weight of load-attaching equipment such as load blocks, shackles, and slings.
- *Load block [lower]* -- Means the assembly of hook or shackle, swivel, sheaves, pins, and frame suspended by the hoisting ropes.
- *Load block [upper]* -- Means the assembly of hook or shackle, swivel, sheaves, pins, and frame suspended from the boom point.
- *Load hoist* -- A hoist drum and rope reeving system.

- *Load Ratings* -- Crane ratings in pounds established by the manufacturer.
- *Locomotive Crane* -- Consists of a rotating superstructure with power-plant, operating machinery and boom, mounted on a base or car equipped for travel on railroad track. It may be self-propelled or propelled by an outside source. Its function is to hoist and swing loads at various radii.
- *Mobile Hoisting Equipment* -- Conventional rigid boom cranes, hydraulic cranes, and flexlifts.
- *Outriggers* -- Extendable or fixed metal arms, attached to the mounting base, which rest on supports at the outer ends.
- *Reeving* -- A rope system in which the rope travels around drums and sheaves.
- *Rigging* -- Any cables, chokes, slings, hooks, beams, spreaders, or other device used to attach or lift the load.
- *Rope* -- Refers to a wire rope unless otherwise specified.
- *Side Loading* -- A load applied at an angle to the vertical plane of the boom.
- *Superstructure* -- The rotating upper frame structure of the machine and the operating machinery mounted thereon.
- *Swing* -- Means the rotation of the superstructure for movement of loads in a horizontal direction about the axis of rotation.
- *Swing Mechanism* -- The machinery involved in providing rotation of the superstructure.
- *Tackle* -- Assembly of ropes and sheaves arranged for hoisting and pulling.
- *Truck Crane* -- Consists of a rotating superstructure with power plant, operating machinery and boom, mounted on an automotive truck equipped with a power plant for travel. Its function is to hoist and swing loads at various radii.
- *Wheel Mounted Crane* -- Consists of a rotating superstructure with power plant, operating machinery and boom, mounted on a base or platform equipped with axles and rubber-tired wheels for travel. The base is usually propelled by the engine in the superstructure, but it may be equipped with a separate engine controlled from the superstructure. Its function is to hoist and swing loads at various radii.

- *Whipline* -- A separate hoist rope system of lighter load capacity and higher speed than provided by the main hoist.
- *Winch Head* -- A power driven spool for handling of loads by means of friction between fiber or wire rope and spool.

SAFETY & OPERATIONAL REQUIREMENTS

Responsibilities

Site Supervisor

The Site Supervisor or his/her designate is responsible for assuring that:

- Employees/Subcontracted Personnel know, understand, and comply with the requirements of this policy.
- Employees/Subcontracted Personnel are trained in the procedures and use of equipment they are to use to complete the job.
- Audit and inspect for compliance of this policy.
- Each crane is on a regular (daily, monthly, annual) inspection schedule.
- Proofs of regular inspections using the checklist in this policy are available.
- Rental or leased cranes have a valid annual certification sticker or other documents prior to the use of the cranes.
- Competent, qualified operators are used when lifting.
- A *Crane Safe Work Permit* is issued for the following:
    a. All lifts with cranes having a capacity greater than 10 tons.
    b. All critical lifts.
- Joint responsibility with the crane operator for the safe operation of the crane(s) and the safety of the lift is maintained.
- Failure to comply with this policy will result in disciplinary action, up to and including discharge.

Crane Operators

The crane operator will be designated by **PNT Consulting LLC** and is responsible for:

- Knowing, understanding, and complying with this policy.
- Inspecting cranes on a daily basis and reporting defects noted during these inspections.
- Reporting any unsafe conditions to supervision.
- Knowing the weight of loads PRIOR to lifting.
- Knowing the wind speed PRIOR to lifting.
- Performing a daily inspection using the *Daily Operators Inspection Report* at the beginning of each days work PRIOR to the crane use. Any deficiencies that affect the safe operations of the crane shall be repaired PRIOR to use. Each daily inspection report shall remain with the operator during the operation of the crane and turned in at the end of the work day.
- Perform a lifting job specific pre-task assessment using *Operators Lift Pre-Task Safety Assessment* for each lift.
- Insure the load, rigging, procedures, and lifts are safe to use. The operator is responsible for the load and lift when the crane is connected to the load.
- Assume joint responsibility with the Site Supervisor for the safe operation of the crane(s) and the safety of the lift.
- Understand that failure to comply with this policy will result in disciplinary action, up to and including discharge.

General Requirements

Pre-Lift

- Manufacturer’s lifting procedures and methods shall be observed at all times.
- No modifications or additions which affect the capacity or safe operation of the equipment shall be made by the company or it’s employees without the manufacturer's written approval. If such modifications or changes are made, the capacity, operation, and maintenance instruction plates, tags, or decals, shall be changed accordingly. In no case shall the original safety factor of the equipment be reduced.

- All cranes shall have a qualified competent operator.
- Inspect cranes when they arrive on site for mechanical integrity, load chart, operating manual and annual certification decal/sticker. (See policy on Rigging)
- The crane operator must complete an *Operator's Lift Pre-Task Assessment* and *Mobile Hoisting Safe Work Procedure* PRIOR to lifting.
- Rated load capacities, recommended operating speeds, special hazard warnings, or instructions shall be in a conspicuous place on all equipment, as required, and shall be visible to the operator while at the control station.
- Inspect all rigging devices before use. Follow manufacturer's capacities and recommendations.
- Obtain a *Crane Safe Work Permit* for all cranes with capacities of 10 tons or more and critical lifts.
- Work with lifts, cranes, or any hoisting equipment must be supervised at all times.
- Wooden pads on outriggers will be used on all non-concrete surfaces. Mats will be used as needed.
- The rear of the rotating superstructure of a crane will be barricaded to warn of the pinch point hazard.
- The area where an overhead lift is made will be barricaded if personnel can have access and walk under the load.
- Load block, headache ball, hooks, boom tip, and anti-2 block devices shall be marked with highly visible fluorescent orange paint.
- All jibs shall have positive stops to prevent their movement of more than 5 degrees above the straight line of the jib and boom on conventional type crane booms. The use of cable type belly slings does not constitute compliance with this rule.

Lifting

- Lifting multiple loads, "Christmas treeing", is prohibited.
- Hand signals to crane operators shall be those prescribed by the applicable ANSI standard for the type of crane in use. An illustration of the signals shall be posted at the job site.

- All employees shall be kept clear of loads about to be lifted and of suspended loads.
- There shall be no sudden acceleration or deceleration of the moving load.
- Side loading of booms shall be limited to freely suspended loads. Cranes shall not be used for dragging loads sideways.
- No hoisting, lowering, swinging, or traveling shall be done while anyone is on the load or hook.
- On truck-mounted cranes, no loads shall be lifted over the front area except as approved by the crane manufacturer.
- The operator shall test the brakes each time a load approaching the rated load is handled by raising it a few inches and applying the brakes.
- Outriggers shall be used when the load to be handled at that particular radius exceeds the rated load without outriggers as given by the manufacturer for that crane. Where floats are used they shall be securely attached to the outriggers.
- Wood blocks used to support outriggers shall:
    - Be strong enough to prevent crushing.
    - Be free from defects.
    - Be of sufficient width and length to prevent shifting or toppling under load.
- Neither the load nor the boom shall be lowered below the point where less than 2
- full wraps of rope remain on their respective drums.
- When two or more cranes are used to lift one load, one designated person shall be responsible for the operation. He/she shall be required to analyze the operation and instruct all personnel involved in the proper positioning, rigging of the load, and the movements to be made.
- In transit the following additional precautions shall be exercised:

    a. The boom shall be carried in line with the direction of motion.

    b. The superstructure shall be secured against rotation, except when negotiating turns when there is an operator in the cab or

c. the boom is supported on a dolly.

The empty hook shall be lashed or otherwise restrained so that it cannot swing freely.

- Before traveling a crane with load, a designated person shall be responsible for determining and controlling safety. Decisions such as position of load, boom location, ground support, travel route, and speed of movement shall be in accord with his determinations.
- A crane with or without load shall not be traveled with the boom so high that it may bounce back over the cab.
- When rotating the crane, sudden starts and stops shall be avoided. Rotational speed shall be such that the load does not swing out beyond the radii at which it can be controlled. A tag or restraint line shall be used when rotation of the load is hazardous.
- When a crane is to be operated at a fixed radius, the boom-hoist pawl or other positive locking device shall be engaged.
- Ropes shall not be handled on a winch head without the knowledge of the operator.
- While a winch head is being used, the operator shall be within convenient reach of the power unit control lever.
- The operator shall not be permitted to leave his position at the controls while the load is suspended.
- No person should be permitted to stand or pass under a load on the hook.
- If the load must remain suspended for any considerable length of time, the operator shall hold the drum from rotating in the lowering direction by activating the positive controllable means of the operator's station.

Other Requirements

- Cranes shall not be operated without the full amount of any ballast or counterweight in place as specified by the maker, but truck cranes that have dropped the ballast or counterweight may be operated temporarily with special care and only for light loads without full ballast or counterweight in place. The ballast or counterweight in place specified by the manufacturer shall not be exceeded.

- Necessary clothing and personal belongings shall be stored in such a manner as to not interfere with access or operation.
- Tools, oil cans, waste, extra fuses, and other necessary articles shall be stored in the tool box, and shall not be permitted to lie loose in or about the cab.
- Refueling with small portable containers shall be done with an approved safety type can equipped with an automatic closing cap and flame arrester.
- Machines shall not be refueled with the engine running.
- A carbon dioxide, dry chemical, or equivalent fire extinguisher shall be kept in the cab or vicinity of the crane.
- Operating and maintenance personnel shall be made familiar with the use and care of the fire extinguishers provided.

Crane maintenance, repairs and "out of service" procedures

Prior to making repairs or adjustments to a crane, specific procedures shall be followed and precautions taken:

- Move the crane to be repaired to a place where it will cause the least interference with other cranes and operations in the area.
- Set all controllers to the off position.
- Open the main or emergency switch and lock it in the open position.
- Place prominent warning or "out of order" signs on the crane so that they are in plain sight of workers in the area.
- After repairs and adjustments are completed, replace all guards, reactivate all safety devices and remove maintenance equipment before operating the crane.

Operations Near Overhead Electrical Lines

Except where electrical distribution and transmission lines have been de-energized and visibly grounded at point of work or where insulating barriers, not a part of or an attachment to the equipment or machinery, have been erected to prevent physical contact with the lines, equipment or machines shall be operated proximate to power lines only in accordance with the following:

- *Could you get within 20 feet of ANY power line? If the answer is NO, there is no further action required. If the answer is YES, then you have 3 options:*

  1. *De-energize & Ground*
  2. *Maintain 20 foot clearance*
  3. *Ask Utility for Voltage and use Table A (with minimum clearance distances)*
  4. *If you chose option 2 or 3 then Encroachment Prevention Measures need to be implemented including, a planning meeting, if tag lines are used then non-conductive, elevated warning lines, barricade or line of signs, plus choose one: Proximity alarm, spotter, warning device, range limiter, or insulating link*

Table A – Minimum Clearance Distances

Voltage (nominal, kV, alternating current)	*Minimum clearance distance (feet)*
up to 50	*10*
over 50 to 200	*15*
over 200 to 350	*20*
over 350 to 500	*25*
over 500 to 750	*35*
over 750 to 1000	*45*
over 1000	*(as established by the power line owner/operator or registered professional engineer who is a qualified person with respect to electrical power transmission and distribution)*

- *If you intentionally work closer than the Table A Zone, you must show that:*
  - *Staying outside the zone is infeasible*
  - *It is infeasible to de-energize and ground and the following is required:*

- *Power line owner – **sets minimum approach distance***
- *Planning meeting – minimum procedures*
- *Dedicated spotter*
- *Elevated warning line or barricade*
- *Insulating link/device*
- *Nonconductive rigging*
- *Range limiter (if equipped)*
- *Nonconductive tag line (if used)*
- *Barricades - 10 feet from equipment*
- *Limit access to essential workers*
- *Prohibit non-operator workers from touching above insulating link*
- *Properly ground crane*
- *Deactivate automatic re-energizer*
- *Insulating line cover-up installed*

- *Electric Utilities – employers whose employees are qualified to perform power distribution and transmission work are considered to be in compliance with §§ 1926.1407-1926.1411 of subpart CC (power lines sections) when performing subpart V work in accordance with § 1910.269. (§ 1926.1400(g))*

- A person shall be designated to observe clearance of the equipment and give timely warning for all operations where it is difficult for the operator to maintain the desired clearance by visual means.
- Cage-type boom guards, insulating links, or proximity warning devices may be used on cranes, but the use of such devices shall not alter the requirements of any other regulation of this part even if such device is required by law or regulation.

- Any overhead wire shall be considered to be an energized line unless and until the person owning such line or the electrical utility authorities indicate that it is not an energized line and it has been visibly grounded.
- Prior to work near transmitter towers where an electrical charge can be induced in the equipment or materials being handled, the transmitter shall be de-energized or tests shall be made to determine if electrical charge is induced on the crane.

The following precautions shall be taken when necessary to dissipate induced voltages:

- The equipment shall be provided with an electrical ground directly to the upper rotating structure supporting the boom; and
- Ground jumper cables shall be attached to materials being handled by boom equipment when electrical charge is induced while working near energized transmitters. Crews shall be provided with nonconductive poles having large alligator clips or other similar protection to attach the ground cable to the load.
- Combustible and flammable materials shall be removed from the immediate area prior to operations.
- Identify work zone by marking boundaries or insure that clearance of 360 degrees around the crane up to the maximum working address

INSPECTION REQUIREMENTS

The Crane Operator and the Crane Competent Person are responsible for performing inspections using *Daily Operators Inspection Report -- Mobile Crane Operation*, *Monthly Hydraulic Crane Inspection Report* and *Monthly Inspection of Truck Cranes*.

Inspection of critical components of the crane shall be performed at least monthly.

Components inspected shall include crane hooks and safety latches; brakes and braking components; and ropes.

Inspection records shall be filed and maintained by the **Quality Control Officer** at the **PNT Consulting LLC** main office. Crane certification records shall include the inspection date, signature of the inspector, and identification of the component by serial number or other identifier. This certification record shall be maintained so that it is readily available for inspection and confirmation.

A written record also shall be maintained of reports showing rated load test procedures and confirming the adequacy of repairs or alterations.

Test loads shall not exceed 110 percent of the rated load at any selected working radius.

If re-rating is required, crawler, truck, and wheel-mounted cranes shall be tested in accordance with SAE Recommended Practice, Crane Load Stability Test Code J765 (April 1961). Re-rating test report shall be readily available.

No re-rating in excess of a crane's original load rating shall be performed unless the manufacturer or designated technician who is in charge of final assembly gives their approval in writing. Such written approval shall be maintained in a file by the **Quality Control Officer**.

A thorough annual inspection of the hoisting machinery shall be made by a competent person, or by a government or private agency recognized by the U.S. Department of Labor.

PNT Consulting LLC shall maintain a record of the dates and results of inspections and rated load tests for each hoisting machine and piece of equipment.

Any defects found will be repaired by a qualified person before the crane is used.
Before a crane is placed in service for use, rope components shall be inspected by a qualified person for defects, damage and deformities and at least monthly thereafter.

Certification of this inspection shall be in writing and document the date of inspection; inspector's name and signature; and identification number of the rope component inspected.
Inspection of wire rope

Wire rope shall be taken out of service when any of the following conditions exist:

- In running ropes, 6 randomly distributed broken wires in 1 lay or 3 broken wires in one strand in one lay;
- Wear of 1/3 the original diameter of outside individual wires.
- Kinking, crushing, bird caging, or any other damage resulting in distortion of the rope structure;
- Evidence of any heat damage from any cause;
- Reductions from nominal diameter of more than 1/64 inch for diameters up to and including 5/16 inch, 1/32 inch for diameters 3/8 inch to and including 1/2 inch, 3/64 inch for diameters 9/16 inch to and including 3/4 inch, 1/16 inch for diameters 7/8 inch to 1 1/8 inches inclusive, 3/32 inch for diameters 1 1/4 to 1 1/2 inches inclusive;

- In standing ropes, more than 2 broken wires in 1 lay in sections beyond end connections or more than 1 broken wire at an end connection.
- Wire rope safety factors shall be in accordance with American National Standards Institute B 30.5-1968 or SAE J959-1966.

Heavy wear and/or broken wires may occur in sections that have contact with equalizer sheaves or other sheaves (where rope travel is limited) or with saddles. Particular care shall be taken to inspect ropes at these locations.

If rope has not been used for a month or longer (i.e. due to shutdown or storage of a crane on which it is installed) this rope shall be given a thorough inspection before it is used.

This inspection shall be made by a designated person who is authorized by the Company.

This inspector shall examine rope for any kind of damage, deterioration or defect that might compromise the safety and specifications of the rope. Specific attention and care shall be given to the inspection of non-rotating rope.

Only this designated and authorized inspector shall give approval for use of this rope following satisfactory safety inspection as described above.

A written record of the inspector’s certification shall be maintained by the Safety

Coordinator in a file and be readily available for review and confirmation. This certification shall include the inspection date, name and signature of the inspector, and the identification number of the rope component that was inspected.

Inspection of hoist chains

Hoist chains and end connections shall be inspected daily for damage, deterioration, excessive wear, twist, distorted links interfering with proper function, or stretch beyond manufacturer's recommendations.

Chains shall be inspected visually by the operator each day or before first use.

Chains also shall be inspected monthly for safety certification. The written certification shall include the date of inspection, name and signature of the inspector, and the identification number of the chain that was inspected. Written certification records shall be maintained by the Safety Coordinator in a file.

Inspection of hooks and hook components

Crane hooks and safety latches shall be visually inspected each day or at the beginning of a shift prior to use for damage, cracks or deformation.

Hooks and safety latches also shall be inspected monthly for safety certification. The written certification shall include the date of inspection, name and signature of the inspector, and the identification number of the hook that was inspected. Written certification records shall be maintained by the **Safety Coordinator** in a file.

Hooks that have cracks or a throat opening that is greater than 15 percent in excess of normal or more than 10 degree twist from the plane of the unbent hook shall be discarded.

Preventive maintenance

PNT Consulting LLC has implemented a preventive maintenance program to help ensure the safety of cranes, hoists, rigging and related equipment. Preventive maintenance shall be performed in accordance with manufacturer's recommendations. Each crane shall have a written record of preventive maintenance that is maintained by the **Safety Coordinator**.

Type of Inspection	*Who?*
Modified or repaired/adjusted	*Qualified person*
Post-assembly	*Qualified person*
Shift	*Competent person*
Monthly	*Competent person*
Annual	*Qualified person*

- *Inspections – all documentation required by the inspection provisions must be available to all inspectors performing required inspections (including wire rope inspections). (§§ 1926.1412 & 1926.1413)*
- *Pre-Erection Inspection for Tower Cranes – adds a requirement to include inspection of crane components after transportation to the work site and prior to erection of the crane. (§§ 1926.1435)*
- *Operations procedures must be developed by a qualified person when the manufacturer's procedures are unavailable.*
- *Procedures related to the capacity of the equipment must be developed by a registered professional engineer (familiar with the equipment) when the manufacturer's procedures are unavailable.*

- *This information must be readily available in the cab of the crane.*
- *Operators cannot be engaged in activities that distract her or his attention while operating the equipment (for example, no cellular phone use unless used for signaling).*

Training Requirements for Crane Operators

All Crane Operators must be trained to recognize and avoid hazards. Training must be provided to the employee in a manner where they can understand it whether it be oral/written training. Training must also be provided in a language that the employee understands, if they are not comfortable Training will be conducted on the requirements of this policy annually, whenever this policy is revised, and for new crane operators or newly hired operators.

Crane operators and the rigging crew will review this policy prior to lifts. If the job has multiple lifts this policy will be reviewed once prior to the jobs starting. All new crane operators and rigging crew members will review this policy prior to starting work.

Please chose which type of training your company will provide in order to make sure your crane operators are qualified to perform their tasks:

1. *Accredited Testing Organization – Please state how and which testing organization you will use to train your employees.*
2. *Audited Employer Program – Please state how your in-house training program will provide sufficient training for your employees and how you will audit it to be up to standards with the regulation.*
3. *US Military – If your employees are working on a US Military project and the crane operators are certified through the US Military through that project then please state how and when this will occur and how often.*
4. *State/Local License – If your state/local government has requirements on Crane Operators and a training program that meets the regulations, please state where, how and how often this training will take place.*

- *Certification Costs for Operators – employers must pay for certification or qualification of their currently uncertified or unqualified operators. (§ 1926.1427(a)(4))*
- *Test Administration and Language Requirements – written tests may be administered in a language understood by the operator candidate. (§ 1926.1427(h))*

- *Certification – clarifies that when the operator's testing is based on a language other than English it must be noted on the certificate. (§ 1926.1427(h))*
- *Audited Employer Program – now specifies that the audit must be conducted in accordance with nationally recognized auditing standards. (§ 1926.1427(c))*

	PORTABLE	***VALIDITY PERIOD***
Accredited testing organization	***YES ****	***5 years***
Audited Employer Program	***NO***	***5 years***
U.S. Military license	***NO ****	***Set by issuing entity***
State/local license	***NO **** ***Valid only in jurisdiction***	***Set by issuing entity, not > 5 years***

** Subject to State & Local requirements and whether or not the military/state training meets accredited requirements.*

Assembly/Dis-Assembly

Two Options (Chose One):

1. *Manufacturer's Procedures*

OR

2. *Employer Procedures (Criteria Requirements)*

The A/D Director, ***Paul B Harvey*** *must be competent and qualified and must:*

- *Understand Procedures*
- *Review Procedures (unless A/D has used them before)*
- *Check that crew members understand their tasks/hazards*
- *Follow Manufacturer's prohibitions*
- *All Rigging work is done by a Qualified Rigger*
- *When using Outriggers, fully extend OR deploy as per the load chart*

Qualified Riggers:

The New Crane Standard adds requirements that employers must use a qualified rigger for rigging operations during assembly/disassembly and other activities when workers must be in the fall zone to handle a load. (§1926.1404 and § 1926.1425)

All riggers of **PNT Consulting LLC** or riggers supplied by a 3rd Party Subcontractor will be qualified person for the performance of specified hoisting activities such as during assembly/disassembly work and those that require employees to be in the fall zone to handle a load. The rigger would be considered qualified through possession of a recognized degree, certificate, or professional standing; or by extensive knowledge, training, and experience, successfully demonstrating the ability to solve/resolve problems related to rigging work and related activities.

Signal Persons:

- *Qualification Requirements:*
  - *Know & understand signals*
  - *Competent in using signals*
  - *Basic understanding of crane operation*
  - *Verbal or written test plus practical test*

Qualified How	*Documentation*	*Portable*
Third party qualified evaluator	*Yes*	*Yes*
Employer qualified evaluator	*Yes*	*No*

Safety Devices

- *Safety devices are required and must be operational at all times*
- *Include:*
  - *Crane level indicator*
  - *Boom/Jib stops (except derricks)*
  - *Integral holding device/check valve for outrigger and stabilizer jack*

Operational aids are required but temporary alternative measures are also allowed while operational aids are being repaired.

- *Boom hoist limiting device, luffing jib limiting device, and anti two-blocking device.* ***Replacement of parts:*** *Must be repaired within 7 days of discovery of deficiency.*
- ***Category II Devices:*** *Boom angle or radius indicator, boom length indicator, load weighing devices, jib angle indicator, outrigger/stabilizer position sensor/monitor, and hoist drum rotation indicator.* ***Replacement of parts:*** *Must be repaired within 30 days of discovery of deficiency.*
- ***Exception: employer has documented that it ordered the part and then repaired the equipment within 7 days of receipt of the replacement part.***
- *When any necessary repairs or adjustments are needed for the equipment and alternative methods are being implemented, the employer must communicate this information to all affected employees at the beginning of each shift. (§ 1926.1417(j))*

Tower Cranes

Some supplemental requirements for Tower Cranes:

- *Foundations & structural supports*
  - *Design & Inspection*
- *Plumb tolerance*
  - *Specification & verification*
- *Climbing procedures*
  - *Host structure strength verification*
  - *Wind*
- *Post-erection load test*
- *Monthly Inspection: tower mast bolts, upper-most tie-in, braces, floor supports, floor wedges*

Required Documentation Includes:

- *Monthly & annual inspection reports for the equipment and wire rope*
- *Modifications that affect the safe use of the equipment*
- *Operator and signal person qualifications*
- *Tower crane foundation/support design*
- *When repairs or adjustments of the equipment are needed*
- *Employer-developed procedures (i.e., assembly/disassembly, operational, and other procedures related to the safe operation of the equipment)*
- *Power line encroachment procedures/plan*

Demolition & Blasting Safe Work Practices

Purpose:

Construction personnel performing demolition work are exposed to many hazardous conditions and materials. Although a contractor may be concerned about employee safety, there should also be heightened awareness for the safety of the general public and the property of others.

Definitions:

Procedures:

Before the start of every demolition job, PNT Consulting LLC shall take a number of steps to safeguard the health and safety of workers at the job site. These preparatory operations involve the overall planning of the demolition job, including the methods to be used to bring the structure down, the equipment necessary to do the job, and the measures to be taken to perform the work safely. Planning for a demolition job is as important as actually doing the work. Therefore, a competent (or qualified in some jurisdictions) person experienced in all phases of the demolition work to be performed shall perform all planning work.

Pre-Demolition/Engineering Survey:

Prior to starting a demolition operation, a written pre-demolition survey or engineering survey of the structure. The purpose of this survey is to determine the condition of the framing, floors, and walls so that measures can be taken, if necessary, to prevent the premature collapse of any portion of the structure. In addition, the survey will identify designated/hazardous substances, physical hazards, and health hazards, etc. When indicated as advisable, any adjacent structure(s) or improvements shall also be similarly checked. PNT Consulting LLC will maintain a written copy of this survey. Photographing existing damage in neighboring structures will also take place by the competent/qualified person designated.

The pre-demolition survey or engineering survey provides PNT Consulting LLC with the opportunity to evaluate the job in its entirety. PNT Consulting LLC shall plan for the wrecking of the structure, the equipment to do the work, manpower requirements, and the protection of the public. The safety of all workers on the job site will be a prime consideration. During the preparation of the pre-demolition survey or engineering survey, PNT Consulting LLC shall plan for potential hazards such as fires, cave-ins, and injuries. If the structure to be demolished has been damaged by fire, flood, explosion, or some other cause, appropriate measures, including bracing and shoring of walls and floors, shall be taken to protect workers and any adjacent structures. It shall also be determined if any type of hazardous chemicals, gases, explosives, flammable material, or similar dangerous substances have been used or stored on the site. If the nature of a substance cannot be easily determined, samples shall be taken and analyzed by a

qualified person prior to demolition.

Utility Location:

One of the most important elements of the pre-job planning is the location of all utility services. All electric, gas, water, steam, sewer, and other services lines shall be shut off, capped, or otherwise controlled, at or outside the building before demolition work is started. In each case, any utility company that is involved shall be notified in advance, and its approval or services, if necessary, shall be obtained.
If it is necessary to maintain any power, water, or other utilities during demolition, such lines shall be temporarily relocated as necessary and/or protected. The location of all overhead power sources shall also be determined, as they can prove especially hazardous during any machine demolition. All workers shall be informed of the location of any existing or relocated utility service. The telephone numbers of the local police, ambulance, and fire departments shall be available at each job site. This information can prove useful to the job supervisor in the event of any traffic problems, such as the movement of equipment to or from the job site.

Medical Services and First Aid:

Prior to starting work, provisions shall be made for prompt medical attention in case of serious injury. The nearest hospital, infirmary, clinic, or physician shall be located as part of the pre-demolition survey or engineering survey. The job supervisor shall be provided with instructions for the most direct route to these facilities. Proper equipment for prompt transportation of an injured worker, as well as a communication system to contact any necessary ambulance service, will be available at the job site. The telephone numbers of the hospitals, physicians, or ambulances shall be conspicuously posted.

A properly stocked first aid kit as determined by an occupational physician will be available at the job site. The first aid kit shall contain approved supplies in a weatherproof container with individual sealed packages for each type of item. It shall also include rubber gloves to prevent the transfer of infectious diseases. Provisions shall also be made to provide for quick drenching or flushing of the eyes should any person be working around corrosive materials. Eye flushing will be done with water containing no additives. The contents of the kit shall be checked before being sent out on each job and at least weekly to ensure the expended items are replaced.

Fire Prevention and Protection:

A **"fire plan"** shall be set up prior to beginning a demolition job. This plan shall outline the assignments of key personnel in the event of a fire and provide an evacuation plan for workers on the site. ***Common sense*** shall be the general rule in all fire prevention planning:

Preparatory Operations:

Demolition & Blasting Safe Work Practices

When employees are required to work within a structure to be demolished which has been damaged by fire, flood, explosion, or other cause, the walls or floor shall be shored or braced.

All electric, gas, water, steam, sewer, and other service lines shall be shut off, capped, or otherwise controlled, outside the building line before demolition work is started. In each case, any utility company that is involved shall be notified in advance.

If it is necessary to maintain any power, water or other utilities during demolition, such lines shall be temporarily relocated, as necessary, and protected.

It shall also be determined if any type of hazardous chemicals, gases, explosives, flammable materials, or similarly dangerous substances have been used in any pipes, tanks, or other equipment on the property. When the presence of any such substances is apparent or suspected, testing and purging shall be performed and the hazard eliminated before demolition is started.

Where a hazard exists from fragmentation of glass, such hazards shall be removed.

Where a hazard exists to employees falling through wall openings, the opening shall be protected to a height of approximately 42 inches.

When debris is dropped through holes in the floor without the use of chutes, the area onto which the material is dropped shall be completely enclosed with barricades not less than 42 inches high and not less than 6 feet back from the projected edge of the opening above. Signs, warning of the hazard of falling materials, shall be posted at each level. Removal shall not be permitted in this lower area until debris handling ceases above.

All floor openings, not used as material drops, shall be covered over with material substantial enough to support the weight of any load that may be imposed. Such material shall be properly secured to prevent its accidental movement.

Except for the cutting of holes in floors for chutes, holes through which to drop materials, preparation of storage space, and similar necessary preparatory work, the demolition of exterior walls and floor construction shall begin at the top of the structure and proceed downward. Each story of exterior wall and floor construction shall be removed and dropped into the storage space before commencing the removal of exterior walls and floors in the story next below.

Employee entrances to multi-story structures being demolished shall be completely protected by sidewalk sheds or canopies, or both, providing protection from the face of the building for a minimum of 8 feet. All such canopies shall be at least 2 feet wider than the building entrances or openings (1 foot wider on each side thereof), and shall be capable of sustaining a load of 150 pounds per square foot.

During the planning stage of the job, all safety equipment needs shall be determined. The

required number and type of respirators, lifelines, warning signs, safety nets, special face and eye protection, hearing protection, and other worker protection

In the absence of an infirmary, clinic, hospital, or physician that is reasonably accessible in terms of time and distance to the work site, a person who has a valid certificate in first aid training shall be available at the work site to render first aid.

A comprehensive first aid plan is necessary for any confined space entry.

Pre-Demolition Considerations:

- All potential sources of ignition shall be evaluated and the necessary corrective measures taken.
- When storing debris or combustible material inside a structure, such storage shall not obstruct or adversely affect the means of exit.
- Electrical wiring and equipment for providing light, heat, or power should be installed by a competent person and inspected regularly.
- Electrical wiring and equipment for providing light, heat, or power shall be installed by a competent person and inspected regularly.
- A suitable location at the job site shall be designated and provided with plans, emergency information, and equipment, as needed.
- Access for heavy fire-fighting equipment shall be provided on the immediate job site at the start of the job and well maintained until the job is completed.
- Equipment powered by an internal combustion engine shall be located so that the exhausts discharge away from combustible materials and away from workers.
- When the exhausts are piped outside the building, clearance of at least six inches shall be maintained between such piping and combustible material.
- Free access from the street to fire hydrants and to outside connections for standpipes, sprinklers, or other fire extinguishing equipment, whether permanent or temporary, should be provided and maintained at all times.
- All internal combustion equipment shall be shut down prior to refueling. Fuel for this equipment shall be stored in a safe location.
- Pedestrian walkways should not be so constructed as to impede access to hydrants.
- Sufficient fire fighting equipment shall be located near any flammable or combustible liquid storage area.
- Only approved containers and portable tanks shall be used for the storage and handling of flammable combustible liquids.
- No material or construction should interfere with access to hydrants, Siamese connections, or fire-extinguishing equipment
- A temporary or permanent water supply of volume, duration, and pressure sufficient to operate the fire-fighting equipment properly shall be made available.

- Standpipes with outlets should be provided on large multistory buildings to provide for fire protection on upper levels. If the, water pressure is insufficient, a pump shall also be provided.
- Heating devices shall be situated so they are not likely to overturn and shall be installed in accordance with their listing, including clearance to combustible material or equipment
- Temporary heating equipment, when utilized, shall be maintained by competent personnel.

Pre-Demolition Considerations: (continued)

- An ample number of fully charged portable fire extinguishers should be provided throughout the operation. All motor driven mobile equipment shall be equipped with an approved fire extinguisher.
- Roadways between and around combustible storage piles shall be at least 15 feet wide and maintained free from accumulation of rubbish, equipment, or other materials
- Smoking shall be prohibited at or in the vicinity of hazardous operations or materials. Where smoking is permitted, safe receptacles shall be provided for smoking materials.
- An alarm system, e.g., telephone system, siren, two-way radio, etc. shall be established in such a way that employees on the site and the local fire department can be alerted in case of an emergency.. The alarm code and reporting instructions shall be conspicuously posted and the alarm system shall be serviceable at the job site during the demolition. Fire cutoffs shall be retained in the buildings undergoing alterations or demolition until operations necessitate their removal.

Procedures:

Stairs, Passageways, and Ladders:

- Only those stairways, passageways, and ladders, designated as means of access to the structure of a building, shall be used. Other access ways shall be entirely closed at all times.
- All stairs, passageways, ladders and incidental equipment thereto, which are covered by this section, shall be periodically inspected and maintained in a clean safe condition.
- In a multistory building, when a stairwell is being used, it shall be properly illuminated by either natural or artificial means, and completely and substantially covered over at a point not less than two floors below the floor on which work is being performed, and access to the floor where the work is in progress shall be through a properly lighted, protected, and separate passageway.

Chutes:

- No material shall be dropped to any point lying outside the exterior walls of the structure unless the area is effectively protected.
- All materials chutes or sections thereof, at an angle of more than 45° from the horizontal, shall be entirely enclosed, except for openings equipped with closures at or about floor level for the insertion of materials. The openings shall not exceed 48 inches in height measured along the wall of the chute. At all stories below the top floor, such openings shall be kept closed when not in use.

Chutes: (continued)

- A substantial gate shall be installed in each chute at or near the discharge end. A competent employee shall be assigned to control the operation of the gate, and the backing and loading of trucks.
- When operations are not in progress, the area surrounding the discharge end of a chute shall be securely closed off.
- Any chute opening, into which workmen dump debris, shall be protected by a substantial guardrail approximately 42 inches above the floor or other surface on which the men stand to dump the material. Any space between the chute and the edge of openings in the floors through which it passes shall be solidly covered over.
- Where the material is dumped from mechanical equipment or wheelbarrows, a securely attached toeboard or bumper, not less than 4 inches thick and 6 inches high, shall be provided at each chute opening.
- Chutes shall be designed and constructed of such strength as to eliminate failure due to impact of materials or debris loaded therein.

Removal of Materials through Floor Openings:

Any openings cut in a floor for the disposal of materials shall be no larger in size than 25 percent of the aggregate of the total floor area, unless the lateral supports of the removed flooring remain in place. Floors weakened or otherwise made unsafe by demolition operations shall be shored to carry safely the intended imposed load from demolition operations.

Removal of Walls, Masonry Sections and Chimneys:

- Masonry walls, or other sections of masonry, shall not be permitted to fall upon the floors of the building in such masses as to exceed the safe carrying capacities of the floors.
- No wall section, which is more than one story in height, shall be permitted to stand alone without lateral bracing, unless such wall was originally designed and constructed to stand without such lateral support, and is in a condition safe enough to be self-supporting. All walls shall be left in a stable condition at the end of each shift.
- Employees shall not be permitted to work on the top of a wall when weather conditions constitute a hazard.
- Structural or load-supporting members on any floor shall not be cut or removed until all stories above such a floor have been demolished and removed. This provision shall not prohibit the cutting of floor beams for the disposal of materials or for the installation of equipment, provided that the jurisdictional requirements (Local, State, Federal, or Provincial) are met.

Removal of Walls, Masonry Sections and Chimneys: (continued)

- Floor openings within 10 feet of any wall being demolished shall be planked solid, except when employees are kept out of the area below.
- In buildings of "skeleton-steel" construction, the steel framing may be left in place during the demolition of masonry. Where this is done, all steel beams, girders, and similar structural supports shall be cleared of all loose material as the masonry demolition progresses downward.
- Walkways or ladders shall be provided to enable employees to safely reach or leave any scaffold or wall.
- Walls, which serve as retaining walls to support earth or adjoining structures, shall not be demolished until such earth has been properly braced or adjoining structures have been properly underpinned.
- Walls, which are to serve as retaining walls against which debris will be piled, shall not be so used unless capable of safely supporting the imposed load.

Manual Removal of Floors:

- Openings cut in a floor shall extend the full span of the arch between supports.
- Before demolishing any floor arch, debris and other material shall be removed from such arch and other adjacent floor area. Planks not less than 2 inches by 10 inches in

cross section, full size undressed, shall be provided for, and shall be used by employees to stand on while breaking down floor arches between beams. Such planks shall be so located as to provide a safe support for the workmen shall the arch between the beams collapse. The open space between planks shall not exceed 16 inches.

- Safe walkways, not less than 18 inches wide, formed of planks not less than 2 inches thick if wood, or of equivalent strength if metal, shall be provided and used by workmen when necessary to enable them to reach any point without walking upon exposed beams.
- Stringers of ample strength shall be installed to support the flooring planks, and the ends of such stringers shall be supported by floor beams or girders, and not by floor arches alone.
- Planks shall be laid together over solid bearings with the ends overlapping at least 1 foot.
- When floor arches are being removed, employees shall not be allowed in the area directly underneath, and such an area shall be barricaded to prevent access to it.
- Demolition of floor arches shall not be started until they, and the surrounding floor area for a distance of 20 feet, have been cleared of debris and any other unnecessary materials.

Removal of Walls, Floors, and Material with Equipment:

- Mechanical equipment shall not be used on floors or working surfaces unless such floors or surfaces are of sufficient strength to support the imposed load.
- Floor openings shall have curbs or stop-logs to prevent equipment from running over the edge.

Storage:

- The storage of waste material and debris on any floor shall not exceed the allowable floor loads.
- In buildings having wooden floor construction, the flooring boards may be removed from not more than one floor above grade to provide storage space for debris, provided falling material is not permitted to endanger the stability of the structure.
- When wood floor beams serve to brace interior walls or freestanding exterior walls, such beams shall be left in place until other equivalent support can be installed to replace them.

- Floor arches, to an elevation of not more than 25 feet above grade, may be removed to provide storage area for debris: Provided that such removal does not endanger the stability of the structure.
- Storage space into which material is dumped shall be blocked off, except for openings necessary for the removal of material. Such openings shall be kept closed at all times when material is not being removed.

Removal of Steel Construction:

- When floor arches have been removed, planking in accordance with jurisdictional requirements (Local, State, Federal, or Provincial) shall be provided for the workers engaged in razing the steel framing.
    - Cranes, derricks, and other hoisting equipment used shall meet the requirements specified in other chapters of this Program.
    - Steel construction shall be dismantled column length by column length, and tier by tier (columns may be in two-story lengths).
    - Any structural member being dismembered shall not be overstressed.

Mechanical Demolition:

- No workers shall be permitted in any area, which can be adversely affected by demolition operations, when balling or clamming is being performed. Only those workers necessary for the performance of the operations shall be permitted in this area at any other time.
- The crane boom and loadline shall be as short as possible.

Mechanical Demolition: (continued)

- The weight of the demolition ball shall not exceed 50 percent of the crane's rated load, based on the length of the boom and the maximum angle of operation at which the demolition ball will be used, or it shall not exceed 25 percent of the

nominal breaking strength of the line by which it is suspended, whichever results in a lesser value.

- The ball shall be attached to the loadline with a swivel-type connection to prevent twisting of the loadline, and shall be attached by positive means in such manner that the weight cannot become accidentally disconnected.
- When pulling over walls or portions thereof, all steel members affected shall have been previously cut free.
- All roof cornices or other such ornamental stonework shall be removed prior to pulling walls over.
- During demolition, continuing inspections by a competent person shall be made as the work progresses to detect hazards resulting from weakened or deteriorated floors, or walls, or loosened material. No employee shall be permitted to work where such hazards exist until they are corrected by shoring, bracing, or other effective means.

SPECIAL STRUCTURES DEMOLITION

SAFE WORK PRACTICES WHEN DEMOLISHING A CHIMNEY, STACK, SILO, OR COOLING TOWER

INSPECTION AND PLANNING:

When preparing to demolish any chimney, stack, silo, or cooling tower, the first step will be a careful, detailed inspection of the structure by an experienced person. If possible, architectural/engineering drawings shall be consulted. Particular attention shall be paid to the condition of the chimney or stack. Workers shall be on the lookout for any structural defects such as weak or acid-laden mortar joints, and any cracks or openings. The interior brickwork in some sections of industrial chimney shafts can be extremely weak. If the stack has been banded with steel straps, these bands shall be removed only as the work progresses from the top down. Sectioning of the chimney by water, etc. shall be considered.

SAFE WORK PRACTICE:

When hand demolition is required, it shall be carried out from a working platform.

- Experienced personnel will install a self-supporting tubular scaffold, suspended platform, or knee-braced scaffolding around the chimney.
- Particular attention shall be paid to the design, support, and tie-in (braces) of the scaffold.

SAFE WORK PRACTICES: (continued)

- A competent person shall be present at all times during the erection of the scaffold.
- It is essential that there be adequate working clearance between the chimney and the work platform.
- Access to the top of the scaffold shall be provided by means of portable walkways.
- The platforms shall be decked solid and the area from the work platform to wall bridged with a minimum of two-inch thick lumber.
- A top rail 42 inches above the platform, with a midrail covered with canvas or mesh, shall be installed around the perimeter of the platform to prevent injury to workers below. Debris netting may be installed below the platform.
- Excess canvas or plywood attachments can form a wind-sail that could collapse the scaffold.
- When working on the work platform, all personnel shall wear hard hats, long-sleeve shirts, eye and face protection, such as goggles and face shields, respirators, and safety belts, as required.
- Care shall be taken to assign the proper number of workers to the task.
- Too many people on a small work platform can lead to accidents.

An alternative to the erection of a self-supporting tubular steel scaffold to "climb" the structure with a creeping bracket scaffold. Careful inspection of the masonry and a decision as to the safety of this alternative will be made by a competent person. It is essential that the masonry of the chimney be in good enough condition to support the bracket scaffold.

The area around the chimney shall be roped off or barricaded and secured with appropriate warning signs posted. No unauthorized entry shall be permitted to this area. It is also good practice to keep a worker, i.e., a supervisor, operating engineer, another worker, or a "safety person," on the ground with a form of communication to the workers above.

Special attention shall be paid to weather conditions when working on a chimney. No work shall be done during inclement weather such as during lightning or high wind situations. The work site shall be wet down, as needed, to control dust.

DEBRIS CLEARANCE:

If debris is dropped inside the shaft, it can be removed through an opening in the chimney at grade level.

- The opening at grade will be kept relatively small in order not to weaken the structure.
- If a larger opening is desired, a professional engineer shall be consulted.

DEBRIS CLEARANCE: (continued)

- When removing debris by hand, an overhead canopy of adequate strength shall be provided.
- If machines are used for removal of debris, proper overhead protection for the operator shall be used.
- Excessive debris shall not be allowed to accumulate inside or outside the shaft of the chimney as the excess weight of the debris can impose pressure on the wall of the structure and might cause the shaft to collapse.
- The foreman shall determine when debris is to be removed, halt all demolition during debris removal, and make sure the area is clear of cleanup workers before continuing demolition.

DEMOLITION BY DELIBERATE COLLAPSE:

Another method of demolishing a chimney or stack is by deliberate collapse. Deliberate collapse requires extensive planning and experienced personnel, and shall be used only when conditions are favorable.

There will be a clear space for the fall of the structure of at least 45^0 on each side of the intended fall line and 1½ times the total height of the chimney. Considerable vibration may be set up when the chimney falls, so there should be no sewers or underground services on the line of the fall. Lookouts must be posted on the site and warning signals must be arranged. The public and other workers at the job site must be kept well back from the fall area.

The use of explosives is one way of setting off deliberate collapse. **This type of demolition shall be undertaken only by qualified persons.** The entire work area shall be cleared of nonessential personnel before any explosives are placed. Though the use of explosives is a convenient method of bringing down a chimney or stack, there is a considerable amount of vibration produced, and caution shall be taken if there is any likelihood of damage.

DEMOLITION OF PRESTRESSED CONCRETE STRUCTURES:

The different forms of construction used in a number of more or less conventional structures built during the last few decades will give rise to a variety of problems when the time comes for them to be demolished. Prestressed concrete structures fall in this general category. The most important aspect of demolishing a prestressed concrete structure takes place during the pre-demolition survey or engineering survey. During the survey, a qualified person shall determine if the structure to be demolished contains any prestressed members.

It is the responsibility of PNT Consulting LLC to inform all workers on the demolition job site of the presence of prestressed concrete members within the structure. PNT Consulting LLC shall also instruct them in the safe work practice that will be followed to safely perform the demolition. Workers shall be informed of the hazards of deviating from the prescribed procedures and the importance of following their supervisor's instruction.

Categories of Prestressed Construction

There are four main categories of prestressed members. The category or categories shall be determined before attempting demolition, bearing in mind that any presetressed structure may contain elements of more than one category.

Category 1- Members are prestressed before the application of the superimposed loads, and all cables or tendons are fully bonded in the concrete or grouted within ducts.

Category 2- Like Category 1, but the tendons are left ungrouted. This type of construction can sometimes be recognized from the access points that may have been provided for inspection of the cables and anchors. More recently, unbonded tendons have been used in the construction of beams, slabs, and other members; these tendons are protected by grease and surrounded by plastic sheathing, instead of the usual metal duct.

Category 3- Members are prestressed progressively as building construction proceeds and the dead load increases, using bonded tendons as in Category 1.

Category 4 Like Category 3, but using unbonded tendons as in Category 2.

Examples of construction using members of Categories 3 or 4 are relatively rare. However, they may be found, for example, in the podium of a tall building or some types of bridges. They require particular care in demolition.

PRETENSIONED MEMBERS:

These usually do not have any end anchors, the wires being embedded or bonded within the length of the member. Simple pretensioned beams and slabs of spans up to about 7 meters (23 feet) can be demolished in a manner similar to ordinary reinforced concrete. Pretensioned beams and slabs may be lifted and lowered to the ground as complete units after the removal of any composite concrete covering to tops and ends of the units. To facilitate breaking up, the members shall be turned on their sides. Lifting from the structure shall generally be done from points near the ends of the units or from lifting point positions. Reuse of lifting eyes, if in good condition, is recommended whenever possible. When units are too large to be removed, consideration shall be given to temporary supporting arrangements.

PRECAST UNITS STRESSED SEPARATELY FROM THE MAIN FRAMES OF THE STRUCTURE, WITH END ANCHORS AND GROUTED AND UNGROUTED DUCTS:

Before breaking up, units of this type shall be lowered to the ground, if possible. It is advisable to seek the counsel of a professional engineer before carrying out this work, especially where

there are ungrouted tendons. In general, this is true because grouting is not always 100% efficient. After lowering the units can be turned on their side with the ends up on blocks after any composite concrete is removed. This may suffice to break the unit and release the prestress; if not, a sand bag screen, timbers, or a blast mat as a screen shall be erected around the ends and demolition commenced, taking care to clear the area of any personnel. It shall be borne in mind that the end blocks may be heavily reinforced and difficult to break up.

MONOLITHIC STRUCTURES:

The advice of the professional engineer experienced in prestressed work shall be sought before any attempt is made to expose the tendons or anchorages of structures in which two or more members have been stressed together. It will usually be necessary for temporary supports to be provided so the tendons and the anchorage can be cautiously exposed. In these circumstances it is essential that indiscriminate attempts to expose and de-stress the tendons and anchorages not be made.

PROGRESSIVELY PRESTRESSED STRUCTURES:

In the case of progressively prestressed structures, it is essential to obtain the advice of a professional engineer, and to demolish the structure in strict accordance with the engineer's method of demolition. The stored energy in this type of structure is large. In some cases, the inherent properties of the stressed section may delay failure for some time, but the presence of these large prestressing forces may cause sudden and complete collapse with little warning.

SAFE WORK PRACTICES WHEN WORKING IN CONFINED SPACES:

PNT Consulting LLC often comes in contact with confined spaces when demolishing structure at industrial sites. These confined spaces can be generally categorized in two major groups: those with open tops and a depth that restricts the natural movement of air, and enclosed spaces with very limited openings for entry. Examples of these spaces include storage tanks, vessels, degreasers, pits vaults, casing, and silos. The hazards encountered when entering and working in confined spaces are capable of causing bodily injury, illness, and death. Accidents occur among workers because of failure to recognize that a confined space is a potential hazard. It shall therefore be considered that the most unfavorable situation exists in every case and that the danger of explosion, poisoning, and asphyxiation will be present at the onset of entry.

SAFE BLASTING PROCEDURES

GENERAL SAFE WORK PRACTICES

BLASTING SURVEY AND SITE PREPARATION:

Prior to the blasting of any structure or portion thereof, a complete written survey will be made by a qualified person of all adjacent improvements and underground utilities. When there is a possibility of excessive vibration due to blasting operations, seismic or vibration tests shall be taken to determine proper safety limits to prevent damage to adjacent or nearby buildings, utilities, or other property.

The preparation of a structure for demolition by explosives may require the removal of structural columns, beams or other building components. This work shall be directed by a structural engineer or a competent person qualified to direct the removal of these structural elements. Extreme caution will be taken during this preparatory work to prevent the weakening and premature collapse of the structure.

The use of explosives to demolish smokestacks, silos, cooling towers, or similar structures shall be permitted only if there is a minimum of 90^0 of open space extended for at least 150% of the height of the structure or if the explosives specialist can demonstrate consistent previous performance with tighter constraints at the site.

FIRE PRECAUTIONS:

The presence of fire near explosives presents a severe danger. Every effort shall be made to ensure that fires or sparks do not occur near explosive materials. Smoking, matches, firearms, open flame lamps, and other fires, flame, or heat-producing devices will be prohibited in or near explosive magazines or in areas where explosives are being handled, transported, or used. In fact, persons working near explosives shall not even carry matches, lighters, or other sources of sparks or flame. Open fires or flames shall be prohibited within 100 feet of any explosive materials. In the event of a fire which is in imminent danger of contact with explosives, all employees will be removed to a safe area.

Electrical detonators can be inadvertently triggered by stray RF (radio frequency) signals from two-way radios. RF signal sources shall be restricted from or near to the demolition site, if electrical detonators are used.

PERSONNEL SELECTION:

A blaster is a competent person who uses explosives. A blaster will be qualified by reason of training, knowledge, or experience in the field of transporting, storing, handling, and using explosives. In addition, the blaster shall have a working knowledge of state and local regulations that pertain to explosives. Training courses are often available from manufacturers of explosives and blasting safety manuals are offered by the Institute of Makers of Explosives (IME) as well as

other organizations.

Blasters shall be required to furnish satisfactory evidence of competency in handling explosives and in safely performing the type of blasting required. A competent person shall always be in charge of explosives and shall be held responsible for enforcing all recommended safety precautions in connection with them.

TRANSPORTATION OF EXPLOSIVES

VEHICLE SAFETY:

Vehicles used for transporting explosives shall be strong enough to carry the load without difficulty, and shall be in good mechanical condition. All vehicles used for the transportation of explosives shall have tight floors, and any exposed spark-producing metal on the inside of the body shall be covered with wood or some other non-sparking material.

Vehicles or conveyances transporting explosives shall only be driven by, and shall be under the supervision of, a licensed driver familiar with the local, state, and Federal regulations governing the transportation of explosives. No passengers shall be allowed in any vehicle transporting explosives.

Explosives, blasting agents, and blasting supplies shall not be transported with other materials or cargoes. Blasting caps shall not be transported with other materials or cargoes.

Blasting caps shall not be transported in the same vehicle with other explosives. If an open-bodied truck is used, the entire load shall be completely covered with a fire and water-resistant tarpaulin to protect it from the elements. Vehicles carrying explosives shall not be loaded beyond the manufacturer's safe capacity rating, and in no case shall the explosives be piled higher than the closed sides and ends of the body.

Every motor vehicle or conveyance used for transporting explosives shall be marked or placarded with warning signs required by OSHA and the DOT.

Each vehicle used for transportation of explosives shall be equipped minimally with at least 10 pound rated serviceable ABC fire extinguisher. All drivers shall be trained in the use of the extinguishers on their vehicle.

In transporting explosives, congested traffic and high density population areas shall be avoided, where possible, and no unnecessary stops shall be made. Vehicles carrying explosives, blasting agents, or blasting supplies shall not be taken inside a garage or shop for repairs or servicing. No motor vehicle transporting explosives shall be left unattended.

STORAGE OF EXPLOSIVES

INVENTORY HANDLING AND SAFE HANDLING:

All explosives will be accounted for at all times and all not being used will be kept in a locked magazine. A complete detailed inventory of all explosives received and placed in, removed from, and returned to the magazine shall be maintained at all times. Appropriate authorities will be notified of any loss, theft, or unauthorized entry into a magazine.
Manufacturers' instructions for the safe handling and storage of explosives are ordinarily enclosed in each case of explosives. The specifics of storage and handling are best referred to these instructions and the aforementioned IME manuals. They shall be carefully followed. Packages of explosives shall not be handled roughly. Sparking metal tools shall not be used to open wooden cases. Metallic slitters may be used for opening fiberboard cases, provided the metallic slitter does not come in contact with the metallic fasteners of the case.

The oldest stock shall always be used first to minimize the chance of deterioration from long storage. Loose explosives or broken, defective, or leaking packages can be hazardous and shall be segregated and properly disposed of in accordance with the specific instructions of the manufacturer. If the explosives are in good condition it may be advisable to repack them. In this case, the explosives supplier shall be contacted. Explosives cases shall not be opened or explosives packed or repacked while in a magazine

STORAGE CONDITIONS:

Providing a dry, well ventilated place for the storage of taken to make sure mats and other protection do not disturb the explosives is one of the most important and effective safety measures. Exposure to weather damages most kinds of explosives, especially dynamite and caps. Every precaution shall be taken to keep them dry and relatively cool. Dampness or excess humidity may be the cause of misfires resulting in injury or loss of life. Explosives shall be stored in properly constructed fire and bullet-resistant structures, located according to the IME American Table of Distances and kept locked at all times except when opened for use by an authorized person. Explosives shall not be left, kept, or stored where children, unauthorized persons, or animals have access to them, nor shall they be stored in or near a residence.

Detonators shall be stored in a separate magazine located according to the IME American Table of Distances.

DETONATORS SHALL NEVER BE STORES IN THE SAME MAGAZINE WITH ANY OTHER KIND OF EXPLOSIVE

Ideally, arrangements shall be made whereby the supplier delivers the explosives to the job site in quantities which will be used up during the workday. An alternative would be for the supplier to return to pick up unused quantities of explosives. If it is necessary for the Company to store his explosives, he shall be familiar with all local requirements for such storage.

PROPER USE OF EXPLOSIVES:

Blasting operations shall be conducted between sunup and sundown, whenever possible. Adequate signs shall be sounded to alert to the hazard presented by blasting. Blasting mats or other containment shall be used where there is danger of rocks or other debris being thrown into the air or where there are buildings or transportation systems nearby. Care shall be taken to make sure mats and other protections do not disturb the connections to electrical blasting caps.

Radio, television, and radar transmitters create fields of electrical energy that can, under exceptional circumstances, detonate electric blasting caps. Certain precautions will be taken to prevent accidental discharge of electric blasting caps from current induced by radar, radio transmitters, lightning, adjacent power lines, dust storms, or other sources of extraneous or static electricity.

These precautions shall include:

- Ensuring that mobile radio transmitters on the job site which are less than 100 feet away from electric blasting caps, in other than original containers, shall be de-energized and effectively locked;
- The prominent display of adequate signs, warning against the use of mobile radio transmitters, on all roads within 1,000 feet of the blasting operations;
- Maintaining the minimum distances recommended by the IMES between the nearest transmitter and electric blasting caps;
- The suspension of all blasting operations and removal of persons from the blasting area during the approach and progress of an electric storm.
- After loading is completed, there shall be as little delay as possible before firing. Each blast shall be fired under the direct supervision of the blaster, who shall inspect all connections before firing and who shall personally see that all persons are in the clear before giving the order to fire. Standard signals, which indicate that a blast is about to be fired and a later all clear signal have been adopted. It is important that everyone working in the area be familiar with these signals and that they be strictly obeyed.

PROCEDURES AFTER BLASTING

INSPECTION AFTER THE BLAST:

Immediately after the blast has been fired, the firing line shall be disconnected from the blasting machine and short-circuited. Where power switches are used, they shall be locked open or in the off position. Sufficient time shall be allowed for dust, smoke, and fumes to leave the blasted area before returning to the spot.

An inspection of the area and the surrounding rubble shall be made by the blaster to determine if all charges have been exploded before employees are allowed to return to the operation. All wires shall be traced and the search for unexploded cartridges made by the blaster.

DISPOSAL OF EXPLOSIVES:

Explosives, blasting agents, and blasting supplies that are obviously deteriorated or damaged shall not be used; they shall be properly disposed of. Explosives distributors will usually take back old stock. Local fire marshals or representatives of the United States Bureau of Mines may also arrange for its disposal. Under no circumstances shall any explosives be abandoned.

Wood, paper, fiber, or other materials that have contained high explosives shall not be used again for any purpose, but shall be destroyed by burning. These materials shall not be burned in a stove, fireplace, or other confined space. Rather, they shall be burned at an isolated outdoor location, at a safe distance from thoroughfares, magazines, and other structures. It is important to check that the containers are entirely empty before burning. During burning, the area shall be adequately protected from intruders and all persons kept at least 100 feet from the fire.

Disciplinary Policy

Purpose

PNT Consulting LLC's progressive discipline policy and procedures are designed to provide a structured corrective action process to improve and prevent a recurrence of undesirable employee behavior and performance issues. It has been designed consistent with **PNT Consulting LLC** organizational values, human resource (HR) best practices and employment laws.

Outlined below are the steps of **PNT Consulting LLC's** progressive discipline policy and procedure. **PNT Consulting LLC** reserves the right to combine or skip steps depending on the facts of each situation and the nature of the offense. The level of disciplinary intervention may also vary. Some of the factors that will be considered are whether the offense is repeated despite coaching, counseling or training, the employee's work record, and the impact the conduct and performance issues have on the organization.

Procedure

Step 1: Counseling and verbal warning

Step 1 creates an opportunity for the immediate supervisor to schedule a meeting with an employee to bring attention to the existing performance, conduct or attendance issue. The supervisor should discuss with the employee the nature of the problem or the violation of company policies and procedures. The supervisor is expected to clearly describe expectations and steps the employee must take to improve performance or resolve the problem.

Within five business days of this meeting, the supervisor will prepare written documentation of a Step 1 meeting. The employee will be asked to sign this document to demonstrate his or her understanding of the issues and the corrective action.

Step 2: Written warning

Although [Company Name] hopes that the employee will promptly correct any performance, conduct or attendance issues that were identified in Step 1, **PNT Consulting LLC** recognizes that this may not always occur. The Step 2 written warning involves more formal documentation of the performance, conduct or attendance issues and consequences.

During Step 2, the immediate supervisor and a division manager or director will meet with the employee to review any additional incidents or information about the performance, conduct or attendance issues as well as any prior relevant corrective action plans.

Management will outline the consequences for the employee of his or her continued failure to meet performance or conduct expectations.

A formal performance improvement plan (PIP) requiring the employee's immediate and sustained corrective action will be issued within five business days of a Step 2 meeting. A warning outlining that the employee may be subject to additional discipline up to and including termination if immediate and sustained corrective action is not taken may also be included in the written warning.

Step 3: Suspension and final written warning

There may be performance, conduct or safety incidents so problematic and harmful that the most effective action may be the temporary removal of the employee from the workplace. When immediate action is necessary to ensure the safety of the employee or others, the immediate supervisor may suspend the employee pending the results of an investigation.

Suspensions that are recommended as part of the normal progression of this progressive discipline policy and procedure are subject to approval from a next-level manager and HR.

Depending on the seriousness of the infraction, the employee may be suspended without pay in full-day increments consistent with federal, state and local wage-and-hour employment laws. Nonexempt/hourly employees may not substitute or use an accrued paid vacation or sick day in lieu of the unpaid suspension. Due to Fair Labor Standards Act (FLSA) compliance issues, unpaid suspension of salaried/exempt employees is reserved for serious workplace safety or conduct issues. HR will provide guidance so that the discipline is administered without jeopardizing the FLSA exemption status.

Pay may be restored to the employee if an investigation of the incident or infraction absolves the employee.

Step 4: Recommendation for termination of employment

The last and most serious step in the progressive discipline procedure is a recommendation to terminate employment. Generally, **PNT Consulting LLC** will try to exercise the progressive nature of this policy by first providing warnings, a final written warning or suspension from the workplace before proceeding to a recommendation to terminate employment. However, **PNT Consulting LLC** reserves the right to combine and skip steps depending on the circumstances of each situation and the nature of the offense. Furthermore, employees may be terminated without prior notice or disciplinary action.

Management's recommendation to terminate employment must be approved by HR and the division director or designate. Final approval may be required from the CEO or designate.

Appeal Process

Employees will have the opportunity to present information that may challenge information management has used to issue disciplinary action. The purpose of this process is to provide insight into extenuating circumstances that may have contributed to the employee's performance or conduct issues while allowing for an equitable solution.

If the employee does not present this information during any of the step meetings, he or she will have five business days after that meeting to present such information.

Performance and Conduct Issues Not Subject to Progressive Discipline

Behavior that is illegal is not subject to progressive discipline, and such behavior may be reported to local law enforcement authorities.

Similarly, theft, substance abuse, intoxication, fighting and other acts of violence at work are also not subject to progressive discipline and may be grounds for immediate termination.

Documentation

The employee will be provided copies of all progressive discipline documentation, including all PIPs. The employee will be asked to sign copies of this documentation attesting to his or her receipt and understanding of the corrective action outlined in these documents.

Copies of these documents will be placed in the employee's official personnel file.

Important note: Nothing in this policy provides any contractual rights regarding employee discipline or counseling, nor should anything in this policy be read or construed as modifying or altering the employment-at-will relationship between **PNT Consulting LLC** and its employees.

Drug & Alcohol Policy Adopted DISA Policy

Purpose

Drug and Alcohol Policy

Because of our concern for the safety of our employees, our property, the public and our concern about the productivity of our workforce, PNT Consulting LLC has fully adopted a Substance Abuse Policy that is applicable to all employees. Our purpose in adopting this Policy is to further the objective of establishing and maintaining a work environment free from the adverse effects of drug use and alcohol misuse.

PNT Consulting LLC is a participating client/contractor with DISA, Inc with policy membership within the Exploration & Production Contractors Consortium (EPCC) Program to help manage our employee screening and compliance requirements.

Compliance with EPCC guidelines will be maintained in order to provide the drug and alcohol program's screening, testing, Medical Review Officer Functions, and recordkeeping required by this Policy.

Because of the importance on maintaining a safe and drug-free work place, the PNT Consulting LLC Drug and Alcohol Policy has been fully developed, and is documented and maintained separately in the PNT Consulting LLC office.

A brief description of the components of that program follows below, but the details and official documentation are maintained in the above referenced binder maintained at the PNT Consulting LLC home office.

Per this Policy, every PNT Consulting LLC employee:

1. Is prohibited from using, possessing, selling, purchasing, manufacturing, distributing, or transferring alcoholic beverages and/or controlled substances and/or other performance impairing substances while on duty and/or on PNT Consulting LLC property; and,

2. Is prohibited from being on PNT Consulting LLC property and/or reporting to work or performing work with a measurable amount of alcohol and/or controlled substance and/or performance impairing substance in his/her system; and,

3. Is prohibited from the consumption of alcohol within four hours of the employee's scheduled time to report for work, or within eight hours following an accident or until the employee takes a post-accident alcohol test, whichever occurs first; and,

4. Is required to submit to an alcohol and/or drug test when directed by the PNT Consulting LLC; and,

5. Is prohibited from tampering (adulteration and/or substitution) or attempting to tamper with any alcohol and/or drug test and/or interfering with the testing/collection process; and,

6. Is required to notify his/her supervisor within five calendar days of any conviction for a drug related crime; and,

7. Is responsible for informing his/her physician when being prescribed medication(s) that he/she is covered under the terms of this Policy. The employee shall use medically authorized drugs and/or over-the-counter medications in a manner which will not impair job performance; and,
8. Shall promptly report to his/her supervisor whenever he/she is prescribed and/or uses an over-the-counter medication that might cause job performance impairment.
9. PNT Consulting LLC will provide employee training on the requirements of this Policy. Records showing compliance with the random testing and testing results will be made available to any customer / client who wish to inspect those records.

The EPCC Substance Abuse Policy is available for review upon request.

Drug & Alcohol Policy

1. Policy:

PNT Consulting LLC is committed to maintaining a safe work environment for all employees and those in the public who may be affected, while ensuring that all employees are treated fairly and with respect. Everyone who works for and with our Company is expected to understand the risks of alcohol and drug use to workplace safety, and to be able to identify and respond to those risks in compliance with this policy. Employees are expected to comply directly with this policy and any supporting Company programs. Contractors who conduct work on behalf of our Company are expected to develop and enforce comparable policies and programs to manage alcohol and drug risks among their employees.

2. Work Rules:

2.1. All employees will be informed regarding this policy at the time of employment. Additionally it will be discussed periodically at "tailgate" safety meetings.

2.2. An employee who has a substance problem is encouraged to seek immediate assistance. The Human Resources Department will provide the employee with the name and address of local agencies or facilities that are equipped to provide the rehabilitation assistance needed by the employee.

2.3. The following actions are strictly prohibited;

2.3.1. While on company property or at a company worksite, to use, consume, possess, distribute, sell or transfer:

i. Alcohol (unless contained in sealed (unopened) packaging, and secured in vehicle for transfer to home or official company-sanctioned event) or

ii. Drugs other than those permitted by this policy as described below, or

iii. Drug paraphernalia;

2.3.2. From reporting to work or performing work while the employee's ability to safely perform his or her duties is adversely affected by use of drugs or alcohol.

2.3.3. From refusing to;

i. Comply with a request to confirm he or she is in compliance with this policy when a supervisor or manager has reasonable grounds to believe the employee may not be in compliance, or

ii. Comply with a request to submit to an alcohol or drug test:

a. When a supervisor or manager has reasonable grounds to believe the employee may not be in compliance with the policy and the employee cannot confirm compliance without a test;

b. Following an incident or near miss if a supervisor or manager present at the workplace has reasonable grounds to believe that the employee was involved in the incident or near miss and there is no objective evidence to believe that the use of alcohol or drugs did not contribute to the cause of the incident or near miss;

c. When applying for or transferring into a safety-sensitive position;

d. As periodically required by the Company throughout the time the employee is working in a safety-sensitive position; and

e. When the employee has previously tested positive and is returning to work after an assessment by a substance abuse expert.

2.4. This Work Rule permits the possession or use of prescription and non-prescription drugs under the following conditions:

i. Any prescription drug in the employee's possession or used by the employee is prescribed to the employee, and

ii. The employee is using the prescription or non-prescription drug for its intended purpose and in the manner directed by the employee's physician or pharmacist or the manufacturer of the drug, and

iii. The use of the prescription or non-prescription drug does not adversely affect the employee's ability to safely perform his or her duties, and

iv. The employee has notified his or her supervisor or manager before starting work of any potentially unsafe side effects associated with the use of the prescription or non-prescription drug.

No information collected about an employee under this policy will be disclosed to any person, unless the employee has given consent or the supervisor or manager in possession of the information is legally required to disclose it.

3. Testing Procedures

3.1. Laboratory Testing

PNT Consulting LLC will designate the laboratories to perform substance testing on blood or urine specimens in accordance with standards set forth by an established industry standard. The substances and detection levels covered by this testing program are set forth below. Employees may be asked by collection site personnel to indicate whether there is the potential that they will test positive for prescription or other substances. A consent form and information sheet will be provided. If the employee fails to provide an acceptable urine specimen the company may take the following steps:

i. Extend the stay of the employee at the designated collection site, if feasible, until

an acceptable specimen can be collected.

ii. Reschedule the test due to unusual circumstances, i.e. post-operative situations.

iii. Discipline the employee, up to and including termination, on the first offense for failing to cooperate or refusing to provide an acceptable specimen

All positive urine specimen test results for employees on active status will be confirmed by standard laboratory procedures. In case of testing by means other than urine (i.e. breath or other samples), reliable laboratory or instrument testing procedures will be followed.

3.2. Testing Substances

As a minimum, the following substances and detection levels shall be tested for:

i. Alcohol level equal to or in excess of 0.04 BAL;

ii. Equal to or in excess of the urine concentrations set out in the below table;

Drugs or Classes of Drugs	Screening concentration equal to or in excess of ng/ml
Marijuana metabolites	50
Cocaine metabolites	300
Opiates	2000
6-Acetylmorphone	10
Phencyclidine	25
Amphetamines/Methamphetamines	1000
MDMA	500

Concentrations at or in excess of the above levels shall be conclusive proof of unacceptable levels of unauthorized, prohibited, illegal or controlled substances.

4. Disciplinary Action for Policy Violation

4.1 Applicants

i. If the final result of a pre-employment drug scree is positive, the applicant will not be employed. No applicant can be reconsidered for employment sooner than six (6) months following the date of the positive drug screen.

4.2 Employees

ii. No drug test will be conducted without written consent. However, any employee who refuses to provide such written consent and fully cooperate with this policy will be subject to disciplinary action up to and including discharge from employment.

iii. Under certain circumstances, disciplinary action may include a mandatory referral to and enrollment in an approved rehabilitation program at the employee's expense. This action may also require an indefinite suspension of regular employment.

iv. An employee's job is not in jeopardy by reason of his voluntary admission to having a substance problem and request for help and referral to an approved rehabilitation program, provided that such request is made prior to, and well in advance of, any consideration of being tested under the provisions of this policy. Employees participating in this rehabilitation program will be subject to follow-up or "maintenance" testing.

4.3 Contractors, Subcontractors, Vendors, Their Employees' Agents or Representatives.

i. No drug test will be conducted without written consent. However, anyone who refuses to provide such written consent and does not fully cooperate with this policy will be subject to disciplinary action up to and including removal from the job or job site, as may be appropriate. Preliminary findings of a policy violation may require that the individual involved be suspended from the job pending the results of the company investigation.

ii. If the final result of a "reasonable cause" or "post-accident" drug screen is positive, the individual will be permanently barred from the job.

5. Client Requirements

In the event that a client has an Alcohol and Drug Testing Guideline that is more stringent than those outlined above, the client's guidelines will be followed for all work done with that client. Examples of more stringent guidelines include but are not limited to:

i. A greater number of substances (panels) to be tested for

ii. A lower detection/cut off levels

iii. Specified number or percent of employees to be tested on the site

iv. DOT or similar mandated programs

Electrical Safety Program

Policy

Work activities involving electrical hazards shall be conducted safely.

This policy covers minimum performance standards applicable to all company associates employees and locations. Local practices requiring more detailed or stringent rules, client standards or local, state or other federal requirements regarding this subject can and should be added as an addendum to this procedure as applicable.

Purpose

To establish the procedures that shall be followed in the safe performance of work activities involving general electrical hazards.

Scope

Applies to all company work sites; i.e., company offices, client job sites, etc.

Definitions

Approved means acceptable to the authorities.

Authorized Person means a person approved or assigned by the company to perform a specific duty or duties or to be at a specific location or locations at the jobsite.

Cabinet means an enclosure designed either for surface or flush mounting.

Competent Person means one who is capable of identifying existing and predictable hazards in the surroundings or working conditions which are unsanitary, hazardous, or dangerous to employees, and who has the authorization to take prompt corrective measures to eliminate them.

Conductor (bare) means a conductor having no covering or electrical insulation whatsoever.

Conductor (insulated) means a conductor encased within material of composition and thickness that is recognized as electrical insulation.

Defect means any characteristic or condition that tends to weaken or reduce the strength of the tool, object, or structure of which it is a part.

Disconnect means a device, or group of devices, or other means by which the conductors of a circuit can be disconnected from their source of supply.
Enclosed means surrounded by a case, housing, fence or walls which shall prevent persons from accidentally contacting energized parts.

Enclosure means the case or housing of apparatus, or the fence or walls surrounding an installation to prevent personnel from accidentally contacting energized parts, or to protect the equipment from physical damage.

Exposed (as applied to live parts) means capable of being inadvertently touched or approached nearer than a safe distance by a person. It is applied to parts not suitably guarded, isolated, or insulated.

Guarded means covered, shielded, fenced, enclosed, or otherwise protected by means of suitable covers, casings, barriers, rails, screens, mats, or platforms to remove the likelihood of approach to a point of danger or contact by persons or objects.

Isolated means not readily accessible to persons unless special means for access are used.

Labeled means equipment or materials to which has been attached a label, symbol or other identifying mark of a qualified testing laboratory which indicates compliance with appropriate standards or performance in a specified manner.

NEC stands for National Electric Code.

Qualified means persons who are capable of working safely on equipment and are familiar with electrical properties, the proper use of special precautionary techniques, personal protective equipment, insulating and shielding materials, and insulated tools.

Receptacle means a contact device installed at the outlet for the connection of a single attachment plug. A single receptacle is a single contact device with no other contact device on the same yoke. A multiple receptacle is a single device containing two or more receptacles.

Requirements

General

Feasible engineering and administrative controls shall be applied to mitigate or minimize the risk of injury and illness from exposure to electrical hazards. Where such hazards still exist after application of these controls, local 'hot work' procedures procedures (see local addendum to this section) shall apply and personal protective equipment shall be utilized. Such addenda shall comply with NFPA 70E.

Where feasible, employees shall not perform live electrical work. Branches that engage in live work are required to provide applicable safe work procedures, PPE, and equipment in Addendum to this manual section.

In existing installations, no changes in circuit protection shall be made to increase the load in excess of the load rating of the circuit wiring.

Worn or frayed electric cords or cables shall be removed from work areas for repair or disposal. Plugs equipped with a grounding prong must have the prong in place. Damaged plugs must be repaired. Repairing cords shall be limited to being completed by an authorized qualified person . as determined by the Branch Safety Officer.

Working spaces, walkways, and similar locations must be kept clear of cords to eliminate hazards.

Extension cords shall not be fastened with staples, hung from nails, or suspended by wire.
Control equipment, utilization equipment, and busways approved for use in dry locations only shall be protected against damage from the weather during building construction.

Metal raceways, cable armor, boxes, cable sheathing, cabinets, elbows, couplings, fittings, supports, and support hardware shall be of materials appropriate for the environment in which they are to be installed.

Electrical switches shall be labeled to indicate the system, equipment, service, or tool they control. This includes switch boxes, cabinets, motor control cabinets, stationary equipment, control panels, and other such switches or disconnects.

Persons who perform electrical work shall wear hard hats that are proof tested to 20,000 volts and shall not wear clothing with or without PPE that could increase injury (100% cotton is better than blended materials).

In work areas where the exact location of underground electric power lines is unknown, employees using jackhammers, bars, or other hand tools that may contact a line shall be provided with insulated protective gloves. Gloves must be rated to (or exceed) the voltage for which they may be exposed. The gloves shall be inspected before use and replaced as per the manufacturer's specifications.

Wiring components and equipment in hazardous environments shall be maintained in a condition consistent with NEC requirements (i.e. no loose or missing screws, gaskets, threaded connections, seals, or other impairments to a tight condition).

Hazardous locations are those locations where flammable vapors, liquids or gases, or combustible dusts or

fibers may be present. There are six "classifications" for these types of locations, as follows:

- Class I Division 1 and Division 2
- Class II Division 1 and Division 2
- Class III Division 1 and Division 2

Equipment, wiring methods, and installations of electrical equipment in hazardous (classified) locations must be designated as "intrinsically safe" or be approved for the classification location.

Energized Electrical Parts and Systems

This section does not apply to power distribution or transmission lines. Refer to CFR Subpart “R” 1910.269 (servicing) and/or CFR Subpart “V” 1926.950 (Construction) for overhead power transmission and distribution line requirements.

Safety-related work practices shall be employed to prevent electric shock or other injuries resulting from either direct or indirect electrical contacts, when work is performed near or on equipment or circuits which are or may be energized. The specific safety-related work practices shall be consistent with the nature and extent of the associated electrical hazards.

Live parts to which an employee may be exposed shall be de-energized before the employee works on or near them, unless it can be demonstrated that de-energizing introduces additional or increased hazards or is infeasible due to equipment design or operational limitations. Live parts that operate at less than 50 volts to ground need not be deenergized if there will be no increased exposure to electrical burns or to explosion due to electric arcs.

If the exposed live parts are not de-energized (i.e., for reasons of increased or additional hazards or infeasibility), other safety-related work practices shall be used to protect employees who may be exposed to the electrical hazards involved. Such work practices shall protect employees against contact with energized circuit parts directly with any part of their body or indirectly through some other conductive object. The work practices that are used shall be suitable for the conditions under which the work is to be performed and for the voltage level of the exposed electric conductors or circuit parts. **These work practices will be covered in the Addendum**.

Working on or near exposed de-energized parts

This section applies to work on exposed de-energized parts near enough to expose employee/s to an electrical hazard.

While an employee is exposed to contact with fixed electrical equipment or circuits which have been de-energized, the circuits energizing the parts shall be locked out in accordance with the Energy Control (lockout) section of this manual.

The circuits and equipment to be worked on shall be disconnected from electrical energy sources (and locked out). Control circuit devices, such as push buttons, selector switches, and interlocks, shall not be used as the sole means for de-energizing circuits or equipment.

Procedures for the release of stored electric energy shall be covered in the Addendum to this policy

section (as hot work).

When capacitors or associated equipment are handled, they shall be treated as energized.

Stored non-electrical energy in devices that could reenergize electrical parts shall be blocked or relieved to the extent that the parts could not be accidentally energized by the device.

Working on or near exposed energized parts

Every effort shall be made to preclude work on energized electrical parts. When this is not possible, the requirements of this section shall apply. Potential contact with live energized parts includes work performed on exposed live parts (involving either direct contact or contact by means of tools or materials) or near enough to them for employees to be exposed to any hazard they present.

Only qualified persons shall work on electrical equipment that has not been de-energized.

If work is to be performed near overhead lines, the lines shall be de-energized and grounded, or other protective measures shall be provided before work is started.

If the lines are to be de-energized, arrangements shall be made with the person or organization that operates or controls the electric circuits involved to de-energize and ground them. If protective measures, such as guarding, isolating, or insulating are provided, these precautions shall prevent employees from contacting such lines directly with any part of their body or indirectly through conductive materials, tools, or equipment.

Overhead electrical lines

While conducting site activities near overhead lines, field personnel need to be aware of the location of the lines so as not to use conductive equipment (e.g., metal equipment to include: drill rigs; hand auger extensions; geoprobe units; excavators, etc.) in close proximity to power lines.

OSHA 29 CFR 1926.550 requires that any vehicle or mechanical equipment (i.e., drill rigs) capable of having parts of its structure elevated near energized overhead lines shall be operated so that a clearance distance of at least 10 feet is maintained.

When calculating clearance distances for a drill rig, consider both the length of the derrick and the length of the rods. Position the rig such that if rods are ever fully extended from the top of the derrick, the rods will still be at least 10 feet away from the power lines. Note that rods can lean or sway when elevated so it may be necessary to maintain more than a 10-foot distance on the ground to ensure that there is a 10-foot horizontal distance between the rods and the power line.

Higher voltages require greater clearance distances. Contact the electrical utility company to verify line voltage. If the voltage is higher than 50kV, the clearance shall be increased 4 in. for every 10kV over that voltage.

Table 12-1	
Voltage	**Required Clearance**
0-50 kV	10 feet
50-200 kV	15 feet
200-350 kV	20 feet
350-500 kV	25 feet
500-750 kV	35 feet
750-1000 kV	45 feet

Under any of the following conditions, OSHA allows the required clearance to be reduced:

- If a vehicle is in transit with its structure lowered, the clearance shall be reduced to 4 ft. If the voltage is higher than 50kV, the clearance shall be increased 4 in. for every 10kV over that voltage

- If insulating barriers (boots) are installed to prevent contact with the lines, and if the the line being guarded and are not a part of or an attachmentto the vehicle or its raised structure, OSHA allows the clearance to be reduced to a distance within the designed working dimensions of the insulating barrier. However, while

this is permissible according to OSHA, some utility companies are recommending that safe distances, as described previously, be maintained in addition to the insulating barrier.

- If the equipment is an aerial lift insulated for the voltage involved, and if the work is performed by a qualified person, the clearance (between the uninsulated portion of the aerial lift and the power line) may be reduced to the distance given

When an unqualified person is working in an elevated position near overhead lines, or working on the ground in the vicinity of overhead lines, the location shall be such that the person and the longest conductive object he or she may contact cannot come closer to any unguarded, energized overhead line than the clearance distances indicated in Table 12-1.

For voltages normally encountered with overhead power lines, objects which do not have an insulating rating for the voltage involved shall be considered to be conductive.

When a qualified person is working in the vicinity of overhead lines, whether in an elevated position or on the ground, the person shall not approach or take any conductive object without an approved insulating handle closer to exposed energized parts than the clearance distances indicated in Table 12-2, unless:

- The person is insulated from the energized part (gloves, with sleeves if necessary, rated for the voltage involved are considered to be insulation of the person from the energized part on which work is performed), or
- The energized part is insulated both from other conductive objects at a different potential and from the person, or
- The person is insulated from conductive objects at a potential different from that of the energized

part.

Table 12-2	
Approach Distances for Qualified Employees - Alternating Current	
Voltage range (phase to phase)	**Minimum approach distance**
300V and less	Avoid contact
Over 300V, not over 750V	1 ft. 0 in.
Over 750V, not over 2kV	1 ft. 6 in.
Over 2kV, not over 15kV	2 ft. 0 in.
Over 15kV, not over 37kV	3 ft. 0 in.
Over 37kV, not over 87.5kV	3 ft. 6 in.
Over 87.5kV, not over 121kV	4 ft. 0 in.
Over 121kV, not over 140kV	4 ft. 6 in.

If the equipment is an aerial lift insulated for the voltage involved, and if the work is performed by a qualified person the clearance (between the uninsulated portion of the aerial lift and the power line) may be reduced to the distance indicated in Table 12-2. However, employees standing on the ground shall not contact the vehicle or mechanical equipment or any of its attachments, unless:

- The employee is using protective equipment rated for the voltage or the equipment is located so that no uninsulated part of its structure (that portion of the structure that provides a conductive path to employees on the ground) can come closer to the line than permitted in this section
- If any vehicle or mechanical equipment capable of having parts of its structure elevated near energized overhead lines is intentionally grounded, employees working on the ground near the point of grounding shall not stand at the grounding location whenever there is a possibility of overhead line contact. Additional precautions, such as the use of barricades or insulation, shall be taken to protect employees from hazardous ground potentials, depending on earth resistivity and fault currents, which can develop within the first few feet or more outward from the grounding point

Illumination

Employees shall not enter spaces containing exposed energized parts, unless illumination is provided that enables the employees to perform the work safely. Where lack of illumination or an obstruction precludes observation of the work to be performed, employees shall not perform tasks near exposed energized parts. Employees shall not reach blindly into areas which may contain energized parts.

Confined Space or enclosed space work

When an employee works in a confined or enclosed space (such as a manhole or vault) that contains exposed energized parts, protective shields, protective barriers, or insulating materials shall be used as necessary to avoid inadvertent contact with these parts. Doors, hinged panels, and the like shall be secured to prevent swinging into an employee and causing the employee to contact exposed energized parts (reference the Confined Spaces section of this manual).

Conductive materials and equipment

Conductive materials and equipment that are in contact with any part of an employee's body shall be handled in a manner that will prevent them from contacting exposed energized conductors or circuit parts.

For instance, an employee should measure the length of a sledge hammer and the expected radius of his swing prior to using the hammer near an energized circuit. If such a circuit is present, a sign must be posted to warn the employees. The job supervisor must inform the employees of the location of the lines, the hazards involved, and the protective measures to be taken.

Portable ladders

Portable ladders shall have nonconductive siderails if they are used where the employee or the ladder could contact exposed energized parts (reference Ladder section of this manual).

Conductive apparel

Conductive articles of jewelry and clothing (such as watch bands, bracelets, rings, key chains, necklaces, metalized aprons, cloth with conductive thread, or metal headgear) shall not be worn if they might contact exposed energized parts. However, such articles may be worn if they are rendered nonconductive by covering, wrapping, or other insulating means.

Housekeeping duties

Where live parts present an electrical contact hazard, employees shall not perform housekeeping duties at such close distances to the parts that there is a possibility of contact, unless adequate safeguards (such as insulating equipment or barriers) are provided.

Electrically conductive cleaning materials (including conductive solids such as steel wool, metalized cloth, and silicon carbide, as well as conductive liquid solutions) shall not be used in proximity to energized parts unless procedures are followed which will prevent electrical contact.

Interlocks

Only a qualified person following the requirements of this section may defeat an electrical safety interlock, and then only temporarily while working on the equipment. The interlock system shall be returned to its operable condition when this work is completed.

Grounding, GFCIs and Assured Grounding Procedures
Equipment, tools and cord sets shall be provided and utilized so as to protect employees from electrical shock and to prevent fire.

Equipment and tools

Note: Portable equipment which is "double insulated" and endorsed by a nationally recognized testing facility need not have a grounding conductor, but is subject to the inspection requirements of this section.

Tools and equipment subject to inspection and testing include:

- Portable Electrical Tools such as grinders, drills and stapling guns
- Stationary tools such as table saws, drill presses, and jig saws
- Portable electrical extension cords
- Portable and Temporary lighting systems and cords

Receptacles shall be of the grounding type and their contacts shall be grounded by connection to the equipment grounding conductor of the circuit supplying that receptacle in accordance with the NEC.

Visual inspections

Visual inspection of tools and equipment are required prior to each use and shall include:

- General condition
- Plugs and caps, and presence of ground prong
- Electrical cord sets
- External defects, and missing parts

Defective tools shall be tagged, taken out of service and placed in a secured location until they are repaired or destroyed.

Testing

The following tests shall be performed on all applicable equipment:

- Equipment grounding conductors shall be tested for continuity and shall be electrically continuous

- Receptacle and attachment cap or plug shall be tested for correct attachment of the equipment-grounding conductor. The equipment-grounding conductor shall be connected to its terminal

Required tests should be performed as indicated below:

- Before first use
- Before being returned to service following any repairs
- Before being used, after any incident that can be reasonably suspected to have caused damage (for example, when a cord set is run over)
- At intervals not to exceed 3 months

Test equipment must be evaluated for proper operation immediately before and after tests are conducted.

Removal from service

Any equipment failing any test shall be taken out of service, shall be tagged with a “Danger, Do Not Use” tag, secured and repaired or destroyed.

Ground Fault Circuit Interrupters (GFCI’s)

Ground Fault Circuit Interrupters (GFCI’s) shall be used on receptacles >15 amps up to and including 30 amps for tool and equipment used in construction applications and potentially wet environments (either indoors or outdoors). Receptacles of temporary wiring systems and portable generators shall be protected with a GFCI.

The minimum requirements relative to the use of Ground Fault Circuit Interruptors are:

- Prior to use, and periodically thereafter, verify that the GFCI is in good working order. (e.g., Plug the GFCI in to an outlet, plug a power tool or light in to the GFCI, hit the “test” button and verify that it interrupts current flow). Periodically re-test the GFCI to ensure continued effectiveness.

- Remove from service any GFCI that has insufficient load capacity, is damaged or is ineffective for any reason. Affix a "Danger, Do Not Use" tag and store the GFCI in a secure location until it can be replaced or repaired. Destroy and discard any GFCI that cannot be repaired or re-used.

- Train employees in the provisions of this section as related to safe us of GFCIs. This training should include:
  - Double insulated tools
  - Defective cords and plugs
  - Heavy moisture, and wet conditions
  - Operation, selection, and use of GFCI's

Assured Grounding Program

When this is not possible (feasible) to use GFCI's, the Assured Grounding procedures in this section shall apply and the Branch Office shall include as the Addendum to this policy section an Assured Grounding Program. It is best to avoid situations where an Assured Grounding Program is required because it is very labor intensive to comply. If unavoidable, the elements of this program shall include as a minimum:

- Written description of program
- Program coordinator
- Inspections
- Documented Testing
- Availability of Equipment
- Integrity of testing equipment (repairs/testing of test equipment)
- Handling of defective tools and equipment
- Who will perform tests, and repairs
- Recordkeeping
- How receptacles will be provided with GFCI's

Only qualified persons shall perform inspection and "color code" labeling of tools and equipment.

The color code scheme for labeling tools and equipment, as indicated in the following table, shall be used in the Addendum color scheme. This color code scheme is consistent with guidance from the Association of General Contractors. Tools and equipment shall be color coded on a quarterly basis when inspected and marked according to the Quarterly Code. If inspections are conducted monthly, the Monthly Code should be used. For example "Red & Blue" means the inspection was conducted in the first quarter during February.

Tape Color Coding System		
Month	**Monthly Color Code**	**Quarterly Code**
January	Red	Red
February	Red & Blue	
March	Red & White	
April	Blue	Blue
May	Blue & White	
June	Blue & Green	

July	White	White
August	White & Green	
September	White & Red	
October	Green	Green
November	Green & Red	
December	Green & Blue	

Temporary Wiring

This section applies to temporary electrical power and lighting wiring methods that may be of a class less than would be required for a permanent installation.

Temporary wiring shall be removed immediately upon completion of work and when the purpose for which the wiring was installed no longer applies.

General requirements for temporary wiring

Feeders shall originate in a distribution center. The conductors shall be run as multi-conductor cord or cable assemblies or within raceways.

Branch circuits shall originate in a power outlet or panel board. Conductors shall be run as multi-conductor cord or cable assemblies or open conductors, or shall be run in raceways. Conductors shall be protected by over current devices at their ampacity.

Receptacles shall be of the grounding type. Unless installed in a complete metallic raceway, each branch circuit shall contain a separate equipment-grounding conductor, and receptacles shall be connected to the grounding system. Receptacles shall not be connected to the same ungrounded conductor of multi-wire circuits that supply temporary lighting.

Disconnecting switches or plug connectors shall be installed to permit the disconnection of ungrounded conductors of each temporary circuit.

Lamps for general illumination shall be protected from accidental contact or breakage. Metal-case sockets shall be grounded.

The electric cords shall not be used to suspend temporary lights unless cords and lights are designed for this means of suspension. Temporary lighting shall be properly supported.

Portable electric lighting used in wet and/or other conductive locations, as for example, drums, tanks, and vessels, shall be operated at 12 volts or less. However, 120-volt lights may be used if protected by a ground-fault circuit interrupter.

A mounted box (with a cover) shall be used wherever a change is made to a raceway system or a cable system that is metal clad or metal sheathed. Non-metallic wiring system joints below seven foot (7') shall have mounted boxes and be covered. Exposed temporary joints shall have the wire nuts or other mechanical devices taped with black (electrical) tape to prevent them from falling off. Temporary joints including the ground wire shall have a mechanical connection.

Flexible cords and cables shall be protected from damage. Sharp corners and projections shall be avoided. Flexible cords and cables may pass through doorways or other pinch points, if protection is provided to avoid damage. Cords and temporary wiring passing through walls shall be properly protected (e.g. sleeved).

Extension cord sets used with portable electric tools and appliances shall be of three-wire type and shall be designed for hard or extra-hard usage. Flexible cords used with temporary and portable lights shall be designed for hard or extra-hard usage. See the NEC, ANSI/NFPA 70, in Article 400, Table 400-4 that lists various types of flexible cords, some of which are noted as being designed for hard or extra-hard usage. Note: SEU, SER or other similar cables cannot be laid on the floor despite their rating.

For temporary wiring over 600 volts, nominal, fencing, barriers, or other effective means shall be provided to prevent access of other than authorized and qualified personnel.

Batteries
General

Batteries of the unsealed type shall be located in enclosures with outside vents or in well ventilated rooms and shall be arranged so as to prevent the escape of fumes, gases, or electrolyte spray into other areas.

Ventilation shall be provided to ensure diffusion of the gases from the battery and to prevent the accumulation of an explosive mixture.

Appropriate face shields, aprons, goggles and rubber gloves shall be provided for workers handling acids or batteries. Contact lenses are prohibited while working with batteries, unless using a type of goggle that will not allow the transference of gases.

Facilities for quick drenching of the eyes and body shall be provided within 25 feet of battery handling areas. Facilities shall be provided for flushing and neutralizing spilled electrolyte and for fire protection in the areas of battery use.

Battery charging installations shall be located in areas designated for that purpose. When batteries are being charged, the vent caps shall be kept in place to avoid electrolyte spray. Vent caps shall be maintained in a functioning condition.

Battery manufacturer guideline specifics covering Handling and transporation through Disposal of this policy section shall be met.

Smoking, eating or drinking in areas where batteries are being stored, charged or worked with is prohibited.

Handling and Transportation

Packaging, markings and transportation of batteries shall be in accordance with Federal, State and local laws, regulations and standards.

After the packaging is removed, batteries shall be inspected for defect, including, but not limited to:

- Bulging
- Cracking
- Leaking

Batteries shall not be forced into equipment/locations.
Where feasible, old and new batteries shall not be intermixed.

Storage

Batteries shall be kept in their original packaging until they are ready to be used.

New and used batteries shall be kept separate to distinguish them.

Batteries should be stored separate from combustibles and flammables and protected from being crushed, punctured or exposed to incompatible environmental conditions.

Used batteries, not intended for re-use, shall be properly disposed.

Disposal
Batteries being disposed of shall be done so in accordance with Federal, State and local laws, regulations and standards. When possible, batteries should be recycled.

Clearances in the Work Place
Employees shall not be permitted to work in such proximity to any part of an electric power circuit that the employee could contact the electric power circuit in the course of work, unless the employee is protected against electric shock by deenergizing the circuit and grounding it (if appropriate) or by guarding it effectively by insulation or other means.

Supervisors and/or Competent Person(s) shall ascertain by inquiry, direct observation, or by instruments, whether any part of an energized electric power circuit, exposed or concealed, is so located that the performance of the work may bring any person, tool, or machine into physical or electrical contact with the electric power circuit. The supervisor/Competent Person shall post and maintain proper warning signs where such a circuit exists. The supervisor/Competent Person shall advise employees of the location of such lines, the hazards involved, and the protective measures to be taken.

Barriers or other means of guarding shall be provided to ensure that workspace for electrical equipment will not be used as a passageway during periods when energized parts of electrical equipment are exposed.

Fuses

Installing or removing fuses shall be considered as work with live electrical energy and shall be covered in the Addendum to this policy section for operations conducting such activities.

Persons who perform work on high voltage fuses (over 600 volts) shall wear appropriate head, face, body flash suits, protective footwear and insulated gloves.

Insulating electrical gloves, sleeves, aprons, and other protective electrical clothing shall be tested for leaks and integrity prior to initial use and periodically.

Protector gloves shall be worn over insulating gloves, except as defined in the above referenced standard.

Only manufacturer-qualified personnel shall inspect and make repairs to electrical insulating protective clothing.

Work Space Clearances - 600 Volts, nominal, or less

Working space about electric equipment
Sufficient access and working space shall be provided and maintained about electric equipment to permit ready and safe operation and maintenance of such equipment.

Working clearances

Except as required or permitted elsewhere in this section, the dimension of the working space in the direction of access to live parts operating at 600 volts or less and likely to require examination, adjustment, servicing, or maintenance while live shall not be less than indicated in the table below.

In addition to the dimensions shown in the following table, workspace shall not be less than 30 inches wide in front of the electric equipment. Distances shall be measured from the live parts if they are exposed or from the enclosure front or opening if the live parts are enclosed. Walls constructed of concrete, brick, or tiles are considered to be grounded.

Working space is not required in back of assemblies such as dead-front switchboards or motor control centers where there are no renewable or adjustable parts such as fuses or switches on the back and where connections are accessible from locations other than the back.

Minimum Depth of Clear Working Space in Front of Electric Equipment (feet)			
Nominal voltage to ground conditions*	**(a)***	**(b)***	**(c)***
0-150	3	3	3
151-600	3	3 1/2	4
*Conditions (a), (b), and (c) are as follows: (a) Exposed live parts on one side and no live or grounded parts on the other side of the working space, or exposed live parts on both sides effectively guarded by insulating material. Insulated wire or insulated bus bars operating at not over 300 volts are not considered live parts. (b) Exposed live parts on one side and grounded parts on the other side. (c) Exposed live parts on both sides of the workspace [not guarded as provided in Condition (a)] with the operator between.			
Note: For International System of Units (SI): one foot=0.3048m.			

Working space required by this in this section shall not be used for storage. When normally enclosed live parts are exposed for inspection or servicing, the working space, if in a passageway or general open space shall be guarded.

At least one entrance shall be provided to give access to the working space about electric equipment.

Where there are live parts normally exposed on the front of switchboards or motor control centers, the working space in front of such equipment shall not be less than 3 feet.

The minimum headroom of working spaces about service equipment, switchboards, panel boards, or motor control centers shall be 6 feet 3 inches.

Guarding of live parts

Except as required or permitted live parts of electrical equipment operating at 50 volts or more shall be guarded against accidental contact by cabinets or other forms of enclosures, or by any of the following means:

- By location in a room, vault, or similar enclosure that is accessible only to qualified persons
- By partitions or screens so arranged that only qualified persons will have access to the space within reach of the live parts. Any openings in such partitions or screens shall be so sized and located that persons are not likely to come into accidental contact with the live parts or to bring conducting objects into contact with them
- By location on a balcony, gallery, or platform so elevated and arranged as to exclude unqualified persons

In locations where electric equipment could be exposed to physical damage, enclosures or guards shall be so arranged and of such strength to prevent damage.

Entrances to rooms and other guarded locations containing exposed live parts shall be marked with conspicuous warning signs forbidding unqualified persons to enter.

Work Space Clearances - over 600 volts, nominal
Conductors and equipment used on circuits exceeding 600 volts, nominal, shall comply with all applicable provisions of this section and with the following provisions that supplement or modify those requirements. The provisions of paragraphs listed paragraphs of this section do not apply to equipment on the supply side of the service conductors.

- Installations accessible to qualified persons only
- Installations accessible to unqualified person(s)
- Workspace about equipment

Enclosure for electrical installations

Electrical installations in a vault, room, closet or in an area surrounded by a wall, screen, or fence, access to which is controlled by lock and key or other equivalent means, are considered to be accessible to qualified persons only.

A wall, screen, or fence less than 8 feet in height is not considered adequate to prevent access unless it has other features that provide a degree of isolation equivalent to an 8-foot fence. The entrances to buildings, rooms or enclosures containing exposed live parts or exposed conductors operating at over 600 volts, nominal, shall be kept locked or shall be under the observation of a qualified person at all times.

Installations accessible to qualified persons only

Electrical installations having exposed live parts shall be accessible to qualified persons only and shall comply with requirements of this standard and applicable regulatory standards.

Installations accessible to unqualified person(s)

Electrical installations that are open to unqualified persons shall be made with metal-enclosed equipment or shall be enclosed in a vault or in an area, access to which is controlled by a lock. Metal-enclosed switchgear, unit substations, transformers, pull boxes, connection boxes, and other similar associated equipment shall be marked with appropriate caution signs. If equipment is exposed to physical damage from vehicular traffic, guards shall be provided to prevent such damage. Ventilating or similar openings in metal-enclosed equipment shall be designed so that foreign objects inserted through these openings will be deflected from energized parts.

Workspace about equipment

Sufficient space shall be provided and maintained about electric equipment to permit ready and safe operation and maintenance of such equipment. Where energized parts are exposed, the minimum clear workspace shall not be less than 6 feet 6 inches high (measured vertically from the floor or platform), or less than 3 feet wide (measured parallel to the equipment). The depth shall be as required in the table below. The workspace shall be adequate to permit at least a 90-degree opening of doors or hinged panels.

The minimum clear working space in front of electric equipment such as switchboards, control panels, switches, circuit breakers, motor controllers, relays, and similar equipment shall not be less than specified in the following table, unless otherwise specified. Distances shall be measured from the live parts if they are exposed, or from the enclosure front or opening if the live parts are enclosed.

However, working space is not required in back of equipment such as dead front switchboards or control assemblies where there are no renewable or adjustable parts (such as fuses or switches) on the back and where connections are accessible from locations other than the back. Where rear access is required to work on de-energized parts on the back of enclosed equipment, a minimum working space of thirty (30) inches horizontally shall be provided.

Minimum Depth of Clear Working Space in Front of Electric Equipment (feet)			
Nominal voltage to ground conditions*	**(a)***	**(b)***	**(c)***

601 to 2,500	3	4	5
2,501 to 9,000	4	5	6
9,001 to 25,000	5	6	9
25,001 to 75 kV	6	8	10
Above 75kV	8	10	12
*Conditions (a), (b), and (c) are as follows: (a) Exposed live parts on one side and no live or grounded parts on the other side of the working space, or exposed live parts on both sides effectively guarded by insulating materials. Insulated wire or insulated bus bars operating at not over 300 volts are not considered live parts. (b) Exposed live parts on one side and grounded parts on the other side. Walls constructed of concrete, brick, or tiles are considered to be grounded surfaces. (c) Exposed live parts on both sides of the workspace [not guarded as provided in Condition (a)] with the operator between.			
Note: For International System of Units (SI): one foot=0.3048m.			

Lighting outlets and points of control

The lighting outlets shall be so arranged that persons changing lamps or making repairs on the lighting system will not be endangered by live parts or other equipment. The points of control shall be so located that persons are not likely to come in contact with any live part or moving part of the equipment while turning on the lights.

Elevation of unguarded live parts

Unguarded live parts above working spaces shall be maintained at elevations not less than specified in the following table.

Elevation of Unguarded Energized Parts Above Working Space	
Nominal voltage between phases	**Minimum elevation**
601-7,500	8 feet 6 inches
7,501-35,000	9 feet.
Over 35kV	9 feet+0.37 inches per kV above 35kV
Note: For SI units: one inch=25.4 mm; one foot=0.3048 m.	

Entrance and access to workspace

At least one entrance not less than 24 inches wide and 6 feet 6 inches high shall be provided to give access to the working space about electric equipment. On switchboard and control panels exceeding 48 inches in width, there shall be one entrance at each end of such board where practicable. Where bare energized parts at any voltage or insulated energized parts above 600 volts are located adjacent to such entrance, they shall be guarded.

6.0 References

OSHA 29 CFR 1910 Subpart R
OSHA 29 CFR 1910 Subpart S
OSHA 29 CFR 1926 Subpart K
OSHA 29 CFR 1926 Subpart V
National Electric Code
American National Standards Institute, Z89.2-1971

EMERGENCY ACTION PLAN

PURPOSE

The purpose of an Emergency Action Plan is to protect the employees from serious injury, property loss, or loss of life, in the event of an actual or potential emergency. An emergency may include, but not limited to, any of the following: fire, tornado, earthquake, bomb threat, or hazardous chemical spill.

GENERAL

Emergency preparedness and response planning is an important factor in ensuring employee safety, protecting the environment, public safety and company assets. Therefore, operations do not require any personnel to continue operating critical equipment during an emergency evacuation. Following an emergency evacuation, no employee is permitted to re-enter the building until authorized.

A written copy of the Emergency Action Plan shall be kept in the workplace and available to employees for review.

EMPLOYEE TRAINING

The Safety Manager has overall responsibility of designating and training employees to assist in a safe and orderly evacuation as well as implementing this plan and updating as needed. Additionally, the Safety Manager will assist any employee who may need more information about the plan or an explanation of their duties under the plan. All employees shall be trained in the following areas:

The Alarm System
Preferred means of reporting fires and other emergencies,
Emergency escape procedures and route assignments,
Procedures to account for all employees after emergency evacuation has been completed,
Rescue and medical duties for those employees who perform them, and
Muster Area

Refresher training is required; (1) When the plan is developed or the employee is assigned initially to a job, (2) When the employee's responsibilities under the plan change, or (3) When the plan is changed.

ALERTING BUILDING OCCUPANTS

In case of a fire, call the local Fire Department at 911. In addition, the smoke alarms will alert building occupants of the need for evacuation. Any pertinent fire or rescue information should be

conveyed to the Fire Department.

Persons discovering a fire, smoky condition or any other emergency shall activate the fire alarm system and make a verbal and/or PA announcement immediately.

EVACUATION PROCEDURES

When the fire alarm sounds or a verbal announcement is made, all personnel should ensure that nearby personnel are aware of the emergency, quickly shutdown operating equipment, close doors and exit the building.

All occupants should proceed to their Designated Muster Area via their primary or alternate exits and await further instructions from their Safety Monitor.

REMEMBER R.A.C.E.

Rescue: When you discover a fire, rescue people in immediate danger if you can do so without endangering yourself.
Alarm: Sound the alarm by pulling a fire box and call 911 from a safe distance.
Confine: Close all doors, windows and other openings.
Evacuate: Evacuate the building.

DESIGNATED MEETING AREA

When an alarm sounds or a verbal announcement is made, all occupants will proceed to the nearest exit and gather at the designated “Muster Area” which is pictured on the facilities emergency evacuation maps throughout the facility. The “Muster Area” is designated to be the safe meeting point for all personnel. Once the evacuation has been completed, the Safety Monitor shall a conduct head count. The “Receptionist” will have the responsibility of bringing the “Sign-In Roster” to the Muster Area to account for all employees and visitors after the evacuation.

RESCUE & MEDICAL DUTIES

- Do not move injured personnel.
- Always keep injured personnel lying down, covered and warm.
- Emergency Medical Technicians (EMT) will conduct all rescue and medical duties.

Ergonomics

PURPOSE

The purpose of this procedure is to prevent incidents in the office environment.

SCOPE

This procedure applies to all employees to prevent MSD (Muscular Skeletal Disorder)

LIFTING

Back injuries are often because of improper lifting. Follow the guidelines below for proper lifting:

- Size up the load before you lift. Divide the load into smaller pieces if possible
- Get help should the object be too heavy for you to lift (50 lb limit)
- If you can, try to place heavy items on a surface that is waist high so you do not have to bend down or lift to reach it
- Use a hand truck if you have to move a heavy object. Push rather than pull
- Stretch before lifting
- Keep the load close to your body
- Bend at the knees and hips to avoid pressure on the lower back. Keep the back straight
- Lift with the muscles in your legs instead of your back
- Do not twist when lifting

FILE CABINETS

- Whenever possible, file cabinets will be arranged side by side.
- Upper drawers of file cabinets must not be overloaded.
- Only one file cabinet drawer will be open at a time. Open file drawer must not be left unattended.
- Close desk and file cabinet drawers when they are not in use.
- File cabinets and files will not be positioned so open drawers block passageways.
- Two-drawer file cabinets must not be stacked unless they are designed to be stacked and fastened together.
- File cabinets must not be stacked on top of tables or desks unless they are designed for such use. Even if they are attached to the wall, they may fall if the table is moved because of excessive unsupported weight.
- Tall or large file cabinets, bookcases, and cabinets will be bolted to the wall or together, in libraries or file rooms.

OVERHEAD ITEMS AND WALL HANGINGS

- A stepladder or step stool will be used to reach articles high above the floor (shoulder height). Never stand on the top rung of a stepladder.
- Swivel chairs, chairs, desktops, tables, or other makeshift devices will not be used to reach high places.

- Pictures and wall hangings will be secured with the proper fasteners.
- Shelves will be secured with the proper fasteners and will not be overloaded.
- Avoid storing heavy objects above shoulder level.

FURNITURE

Furniture will be kept in proper repair. Have repaired or replace furniture that has:

- Sharp burrs
- Splintered edges
- Broken casters, legs
- Broken seat or seat back
- Any other deficiency

When furniture replacement is necessary, safety will be considered (i.e., 5-caster vs. 4- caster chairs, ergonomically designed furniture, etc.)

Directions or instruction will be provided for adjusting chairs or other adjustable office furniture.

Bookcases must not be stacked on other furniture unless that furniture is designed to hold the weight.

Where chair mats are used they will not create a tripping hazard. Remove chair mats which are:

- Warped
- Cracked
- Broken

Desk chairs will be stable and level. Do not tilt the chair back to the point where any chair feet leave the floor.

Glass desktops and tables are not recommended.

Typewriter and computer stands will be only used for their intended purpose. Use caution when pulling out a spring-loaded keyboard platform.

OFFICE INCIDENTS

Remove stables with a staple puller and dispose of used stables properly.

Do not overload or force staplers, paper cutter or hole-punch.

Paper cutters will be left in a closed latch position when not in use. Where a paper cutter is equipped with a guard the guard will not be removed.

Use a moistener to seal envelopes to avoid mouth cuts and germs. Avoid paper cuts by picking up individual sheets at the corners. When turning pages or going through files use a moistener pad to avoid paper cuts.

Keep razor-type cutters, such as box cutters and x-acto knives covered or shielded when not in use. Cut on a nonslip surface and away from you.

Avoid touching the heated parts of printers, fax or copy machines whenever:

- Adding or changing paper and cartridges
- Removing paper jams

Never stick a metal object such as a letter opener into a machine or try to make unauthorized

repair.
Do not allow paper or other materials to collect behind copiers or other machinery.
Candles, incense or other open flames are not allowed in the office environment, except using an open flame to keep food warm, when used by a caterer.
Immediately clean up liquid spills that may cause a slip hazard.
Keep walkways free of snow or ice. Tell the building management of dangerous conditions because of snow or ice. At mobile construction field offices, arrangements will be made for snow removal and deicing.

WORKSTATIONS

When using a computer for long periods of time you will:

- Take mini-breaks and look away from the screen periodically
- Stretch to reduce muscle tension
- Use proper posture
- Arrange keyboard, mouse, monitor and chair for a comfortable position

Recommended workstation setup:

- Monitor- top of monitor will be at eye level and positioned to avoid glare
- Documents holders will be at the same level as the monitor
- Forearms will be parallel to the floor and wrist straight. Use a wrist rest to help keep the wrist straight
- Backrest of the chair will support lower back
- Mouse will be close to keyboard
- Hips and knees will be bent at 90°
- Feet will be flat on the floor or use footrest
- Arrange telephone so it is within easy reach. It is suggested that a headset or speaker be used in place of cradling the receiver on your shoulder

Excavation & Trenching Program

Scope and Application:

This policy sets forth the official practices required for excavations made by PNT Consulting LLC employees on property owned by PNT Consulting LLC.

Definitions:

Aluminum hydraulic shoring means an engineered shoring system comprised of aluminum hydraulic cylinders (crossbraces),used in conjunction with vertical rails (uprights) or horizontal rails (walers). Such a system is designed specifically to support the sidewalls of an excavation and prevent cave-ins.

Benching means a method of protecting employees from cave-ins by excavating the sides of an excavation to form one or a series of horizontal levels or steps, usually with vertical or near-vertical surfaces between levels.

Cave-in means the separation of a mass of soil or rock material from the side of an excavation, or the loss of soil from under a trench shield or support system, and its sudden movement into the excavation, either by falling or sliding, in sufficient quantity so that it could entrap, bury, or otherwise injure and immobilize a person.

Competent person means one who is capable of identifying existing and predictable hazards in the surroundings, or working conditions that are unsanitary, hazardous, or dangerous to employees, and who has authorization to take prompt corrective measures to eliminate them. All competent persons must complete the 4-hour Physical Plant trenching and shoring class, successfully pass the exam, and be certified for successful completion of the class. A competent person should have and be able to demonstrate the following:

Training, experience, and knowledge of:
- soil analysis,
- use of protective systems, and
- requirements of 29 CFR 1926 Subpart P.

Ability to detect:
- conditions that could result in cave-ins,
- failures in protective systems,
- hazardous atmospheres, and
- other hazards including those associated with confined spaces.

Authority to take prompt corrective measures to eliminate existing and predictable hazards and to stop work when required.

Excavation means any man-made cut, cavity, trench, or depression in an earth surface, formed by earth removal.

Registered professional engineer means a person who is registered as a professional engineer.

Shield (shield system) means a structure that is able to withstand the forces imposed on it by a cave-in and thereby protect employees with the structure. Shields can be permanent structure or can be designed to be portable and moved along as work progresses. Also known as trench box or trench shield.

Shoring (shoring system) means a structure such as a metal hydraulic, mechanical or timber shoring system that supports the sides of an excavation and which is designed to prevent cave-ins.

Sloping (sloping system) means a method of protecting employees from cave-ins by excavating to form sides of an excavation that are inclined away from the excavation so as to prevent cave-ins. The angle of incline varies with differences in such factors as the soil type, environmental conditions of exposure, and application of surcharge loads.

Trench (trench excavation) means a narrow excavation (in relation to its length) made below the surface of the ground. In general, the depth is greater than the width, but the width of a trench is not greater than 15 feet. If forms or other structures are installed or constructed in an excavation as to reduce the dimension measured from the forms or structure to the side of the excavation to 15 feet or less, the excavation is also considered to be a trench.

General Requirements:

All excavations shall be made in accordance with the rules, regulations, requirements, and guidelines set forth in 29 CFR 1926.650, .651, and .652; the Occupational Safety and Health Administration's standard on Excavations, except where otherwise noted below.

Procedures:

A competent person shall be placed in charge of all excavations. Underground utilities must be located and marked before excavation begins. Employees are not allowed in the excavation while heavy equipment is digging.

Inspections:

The competent person shall conduct inspections:

Daily and before the start of each shift by using the DAILY EXCAVATION CHECKLIST found at the end of this chapter

As dictated by the work being done in the trench.

After every rain storm.

After other events that could increase hazards, such as snowstorm, windstorm,

thaw, earthquake, dramatic change in weather, etc.
When fissures, tension cracks, sloughing, undercutting, water seepage, bulging at the bottom, or other similar conditions occur.
When there is a change in the size, location, or placement of the spoil pile.
When there is any indication of change or movement in adjacent structures.

(For excavations 4 feet or greater in depth, a trench inspection form shall be filled out for each inspection.)

Soil Types:

Type A - Most stable: clay, silty clay, and hardpan (resists penetration). No soil is Type A if it is fissured, is subject to vibration of any type, has previously been disturbed, or has seeping water.

Type B - Medium stability: silt, sandy loam, medium clay and unstable dry rock; previously disturbed soils unless otherwise classified as Type C; soils that meet the requirements of Type A soil but are fissured or subject to vibration.

Type C - Least stable: gravel, loamy sand, soft clay, submerged soil or dense, heavy unstable rock, and soil from which water is freely seeping.

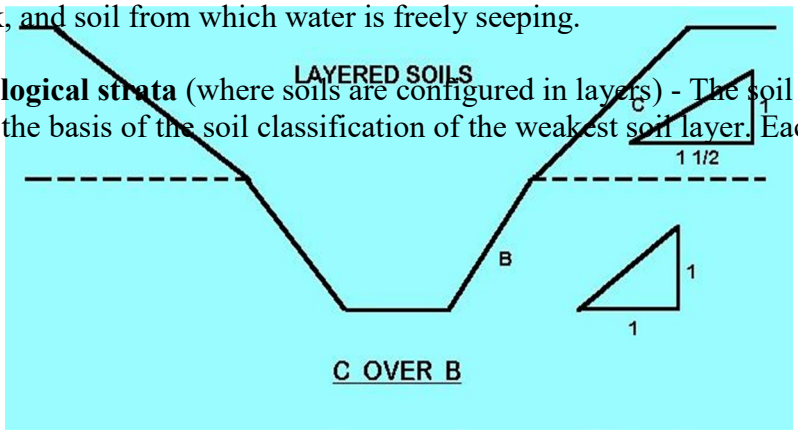

Layered geological strata (where soils are configured in layers) - The soil must be classified on the basis of the soil classification of the weakest soil layer. Each layer may be classified individually if a more stable layer lies below a less stable layer, i.e. where a Type C soil rests on top of stable rock.

Excavation & Trenching Program

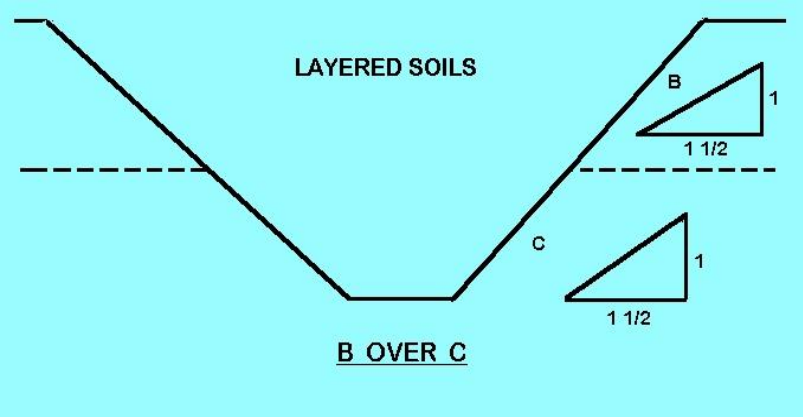

Testing Methods

The competent person in charge of the excavation shall be responsible for determining whether the soil is Type B or C. The competent person shall use a visual test coupled with one or more manual tests.

Visual test

In addition to checking the items on the trench inspection form, the competent person should perform a visual test to evaluate the conditions around the site. In a visual test, the entire excavation site is observed, including the soil adjacent to the site and the soil being excavated. The competent person also checks for any signs of vibration.

During the visual test, the competent person should check for crack-line openings along the failure zone that would indicate tension cracks, look for existing utilities that indicate that the soil has been previously disturbed, and observe the open side of the excavation for indications of layered geologic structuring.

This person should also look for signs of bulging, boiling, or sloughing, as well as for signs of surface water seeping from the sides of the excavation or from the water table.

In addition, the area adjacent to the excavation should be checked for signs of foundations or other intrusions into the failure zone, and the evaluator should check for surcharging and the spoil distance from the edge of the excavation.

Manual tests

Thumb penetration test- Attempt to press the thumb firmly into the soil in question. If the thumb penetrates no further than the length of the nail, it is probably Type B soil. If the thumb penetrates the full length of the thumb, it is Type C. It should be noted that the thumb penetration test is the least accurate testing method.

Dry strength test- Take a sample of dry soil. If it crumbles freely or with moderate pressure into individual grains it is considered granular (Type C). Dry soil that falls into clumps that subsequently break into smaller clumps (and the smaller clumps can only be broken with difficulty) it is probably clay in combination with gravel, sand, or silt (Type B).

Plasticity or Wet Thread Test- Take a moist sample of the soil. Mold it into a ball and then attempt to roll it into a thin thread approximately 1/8 inch in

diameter by two inches in length. If the soil sample does not break when held by one end, it may be considered Type B.

A pocket penetrometer, shearvane, or torvane may also be used to determine the

unconfined compression strength of soils.

Spoil

Temporary spoil shall be placed no closer than 2 feet from the surface edge of the excavation, measured from the nearest base of the spoil to the cut. This distance should not be measured from the crown of the spoil deposit. This distance requirement ensures that loose rock or soil from the temporary spoil will not
fall on employees in the trench.

Spoil should be placed so that it channels rainwater and other run-off water away from the excavation. Spoil should be placed so that it cannot accidentally run, slide, or fall back into the excavation.

Permanent spoil should be placed some distance from the excavation.

Surface Crossing of Trenches

Surface crossing of trenches should not be made unless absolutely necessary. However, if necessary, they are only permitted under the following conditions:

Vehicle crossings must be designed by and installed under the supervision of a registered professional engineer.

Walkways or bridges must: have a minimum clear width of 20 inches, be fitted with standard rails, and extend a minimum of 24 inches past the surface edge of the trench.

Ingress and Egress

Trenches 4 feet or more in depth shall be provided with a fixed means of egress.

Spacing between ladders or other means of egress must be such that a worker will not have to travel more than 25 feet laterally to the nearest means of egress.

Ladders must be secured and extend a minimum of 36 inches above the landing.

Metal ladders should be used with caution, particularly when electric utilities are present.

Exposure to Vehicles

Employees exposed to vehicular traffic shall be provided with and required to wear reflective vests or other suitable garments marked with or made of reflectorized or high-

visibility materials.

Trained flag persons, signs, signals, and barricades shall be used when necessary.

Exposure to Falling Loads

All employees on an excavation site must wear hard hats.

Employees are not allowed to work under raised loads.

Employees are not allowed to work under loads being lifted or moved by heavy equipment used for digging or lifting.

Employees are required to stand away from equipment that is being loaded or unloaded to avoid being struck by falling materials or spillage.

Equipment operators or truck drivers may remain in their equipment during loading and unloading if the equipment is properly equipped with a cab shield or adequate canopy.

Warning Systems for Mobile Equipment

The following steps should be taken to prevent vehicles from accidentally falling into the trench:

Barricades must be installed where necessary,

Warning Systems for Mobile Equipment (continued)

Hand or mechanical signals must be used as required,

Stop logs must be installed if there is danger of vehicles falling into the trench.

Soil should be graded away from the excavation; this will assist in vehicle control and channeling of run-off water.

Trenches left open overnight shall be fenced and barricaded

Hazardous Atmospheres and Confined Spaces

Employees shall not be permitted to work in hazardous and/or toxic atmospheres. Such atmospheres include those with:

less than 19.5% oxygen,
a combustible gas concentration greater than 20% of the lower flammable limit, and,

concentrations of hazardous substance that exceed those specified in the Threshold Limit Values for airborne contaminants established by the ACGIH.

All operations involving such atmospheres must be conducted in accordance with OSHA requirements for occupational health and environmental controls for personal protective equipment and for lifesaving equipment. Engineering controls (such as ventilation) and respiratory equipment may be required.

Testing for Atmospheric Contaminants

If there is any possibility that the trench or excavation could contain a hazardous atmosphere, atmospheric testing must be conducted prior to entry. Conditions that might warrant atmospheric testing would be if the excavation was made in a landfill area or if the excavation was crossed by, was adjacent to, or contained pipelines containing a hazardous material (for example, natural gas lines).

Testing should be conducted before employees enter the trench and should be done regularly to ensure that the trench remains safe. The frequency of testing should be increased if equipment is operating in the trench.

Testing for Atmospheric Contaminants (continued)

Testing frequency should also be increased if welding, cutting, or burning is done in the trench.

Employees required to wear respiratory protection must be trained, fit-tested, and enrolled in a respiratory protection program.

Some trenches qualify as confined spaces. When this occurs, compliance with the COMPANY NAME HERE Confined Space Program is also required.

Standing Water and Water Accumulation

Methods for controlling standing water and water accumulation must be provided and should consist of the following if employees must work in the excavation:

Use of special support or shield systems approved by a registered professional engineer.

Water removal equipment, such as well pointing, used and monitored by a competent person.

Safety harnesses and lifelines used in conformance with 29 CFR 1926.104.

Employees removed from the trench during rainstorms

Trenches carefully inspected by a competent person after each rain and before employees are permitted to re-enter the trench.

Benching, Sloping, Shoring, and Shielding Requirements

All excavations or trenches 4 feet or greater in depth shall be appropriately benched, shored, or sloped according to the procedures and requirements set forth in OSHA's Excavation standard, 29 CFR 1926.650, .651, and .652.

Excavations or trenches 20 feet deep or greater must have a protective system designed by a registered professional engineer.

Excavations under the base of footing of a foundation or wall requires a support system designed by a registered professional engineer.

Sidewalks and pavement shall not be undermined unless a support system or another method of protection is provided to protect employees from their possible collapse.

Sloping

Maximum allowable slopes for excavations less than 20' based on soil type and angle to the horizontal are as follows:

Soil Type	Height/depth ratio	Slope angle
Type B	1:1	45 degrees
Type C	1 1/2:1	34 degrees

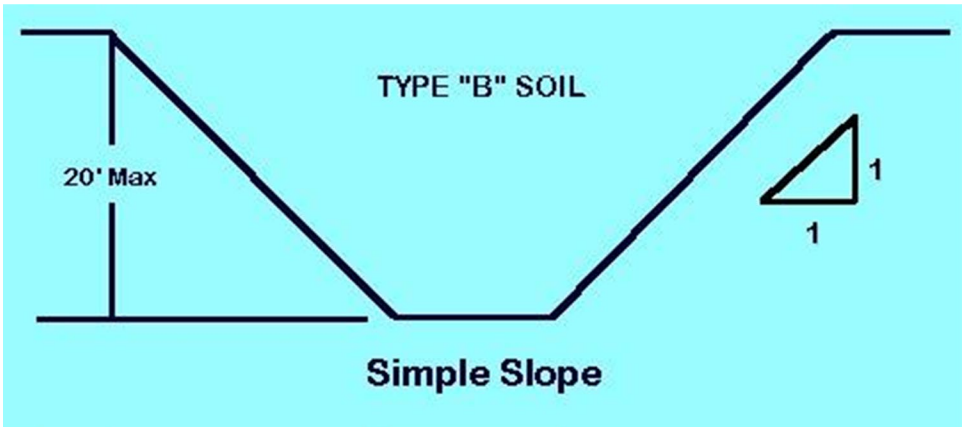

A 10-foot-deep trench in Type B soil would have to be sloped to a 45-degree angle, or sloped 10 feet back in both directions. Total distance across a 10-foot-deep trench would be 20 feet, plus the width of the bottom of the trench itself. In Type C soil, the trench would be sloped at a 34-degree angle, or 15 feet back in both directions for at least 30 feet across, plus the width of the bottom of the trench itself.

All simple slope excavations 20 feet or less in depth shall have a maximum allowable

slope of 1 1/2:1.

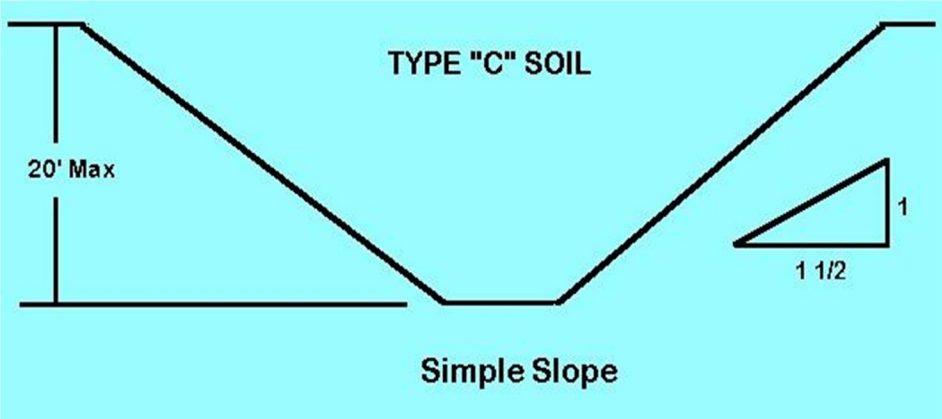

Benching

There are two basic types of benching, single and multiple, which can be used in conjunction with sloping.

All benched excavations 20 feet or less in depth shall have a maximum allowable slope of 1:1.

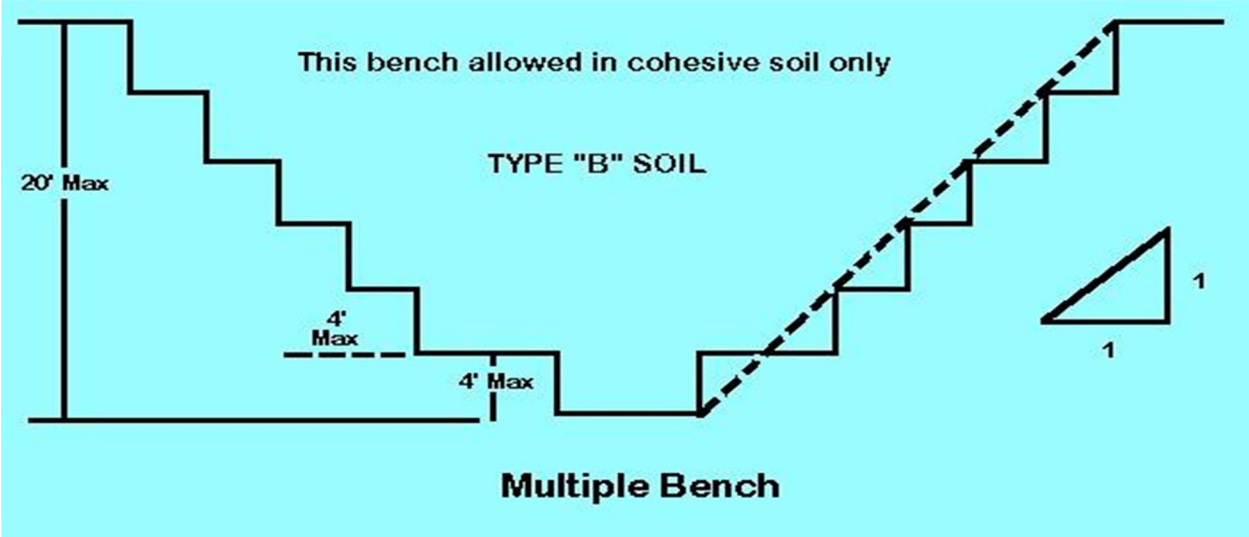

In Type B soil, the vertical height of the benches must not exceed 4 feet. Benches must be below the maximum allowable slope for that soil type. In other words, a 10-foot deep

trench in Type B soil must be benched back 10 feet in each direction, with the maximum of a 45-degree angle.

Benching is not allowed in Type C soil.

PNT Consulting LLC
Excavation and Trenching

Shoring

Shoring or shielding is used when the location or depth of the cut makes sloping back to the maximum allowable slope impractical. There are two basic types of shoring, timber and aluminum hydraulic.

Hydraulic shoring provides a critical safety advantage over timber shoring because workers do not have to enter the trench to install them. They are also light enough to be installed by one worker; they are gauge-regulated to ensure even distribution of pressure along the trench line; and they can be adapted easily to various trench depths and widths. However, if timber shoring is used, it must meet the requirements of 29 CFR 1926.650, .651, and .652.

All shoring shall be installed from the top down and removed from the bottom up. Hydraulic shoring shall be checked at least once per shift for leaking hoses and/or cylinders, broken connections, cracked nipples, bent bases, and any other damaged or defective parts.

The top cylinder of hydraulic shoring shall be no more than 18 inches below the top of the excavation.

The bottom of the cylinder shall be no higher than four feet from the bottom of the excavation. (Two feet of trench wall may be exposed beneath the bottom of the rail or plywood sheeting, if used.)

Three vertical shores, evenly spaced, must be used to form a system.

Wales are installed no more than two feet from the top, no more than four feet from the bottom, and no more than four feet apart, vertically.

Here are some typical installations of aluminum hydraulic shoring:

- Vertical aluminum hydraulic shoring (spot bracing)

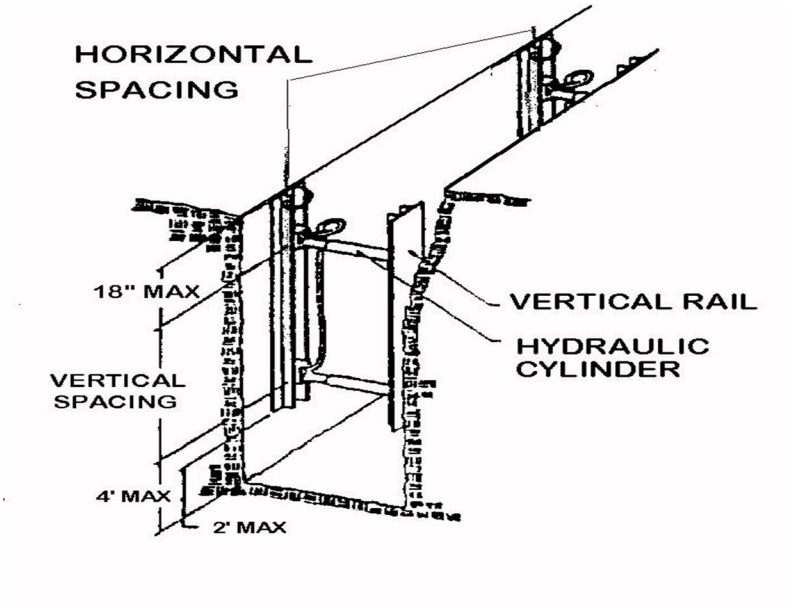

- Vertical aluminum hydraulic shoring (with plywood)

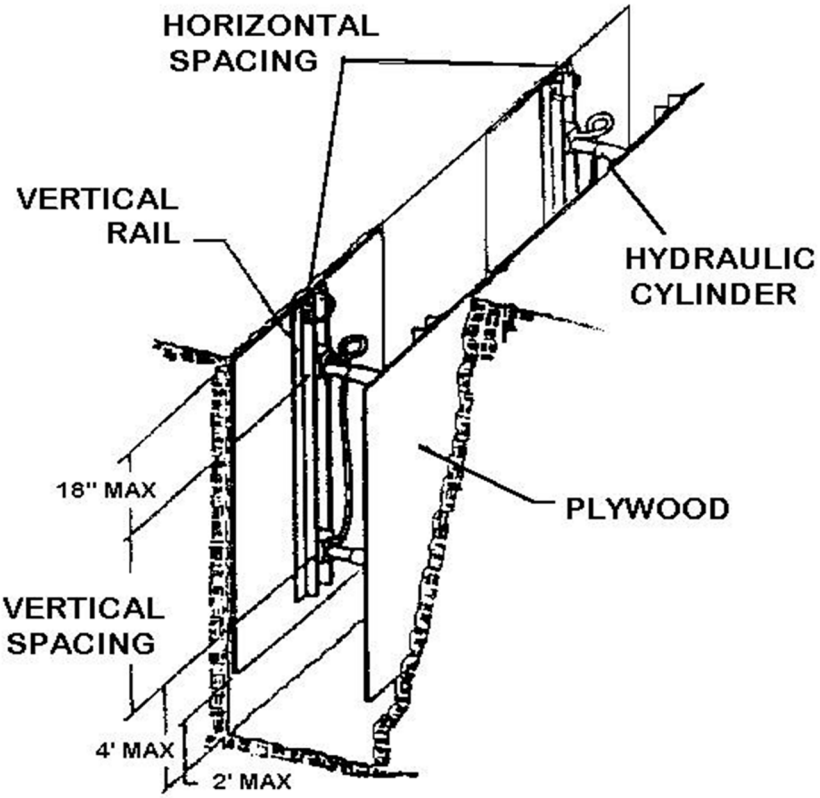

- Vertical aluminum hydraulic shoring (stacked)

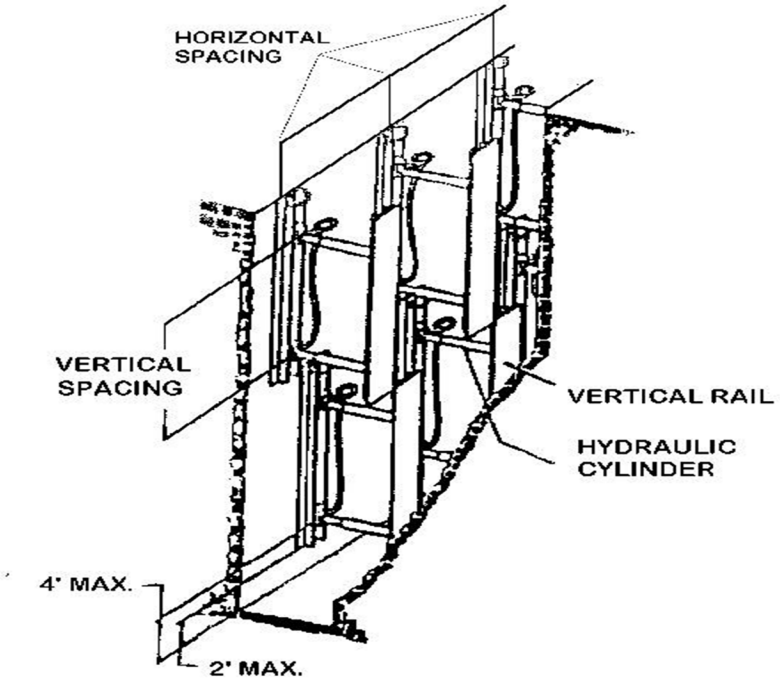

- Aluminum hydraulic shoring waler system (typical)

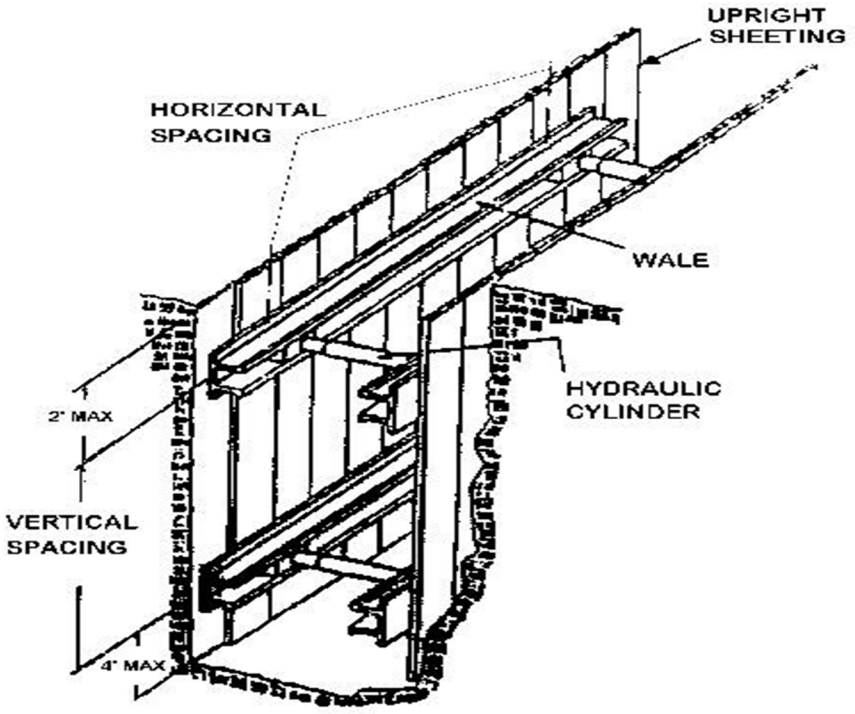

Shielding

Trench boxes are different from shoring because, instead of shoring up or otherwise supporting the trench face, they are intended primarily to protect workers from cave-ins and similar incidents.

The excavated area between the outside of the trench box and the face of the trench should be as small as possible. The space between the trench box and the excavation side must be backfilled to prevent lateral movement of the box. Shields may not be subjected to loads exceeding those which the system was designed to withstand.

Trench boxes are generally used in open areas, but they also may be used in combination with sloping and benching.

The box must extend at least 18 inches above the surrounding area if there is sloping toward the excavation. This can be accomplished by providing a benched area adjacent to the box.

Any modifications to the shields must be approved by the manufacturer.

Shields may ride two feet above the bottom of an excavation, provided they are calculated to support the full depth of the excavation and there is no caving under or behind the shield.

Workers must enter and leave the shield in a protected manner,

such as by a ladder or ramp.

Workers may not remain in the shield while it is being moved.

Illustration of shielding systems in B and C type soils.

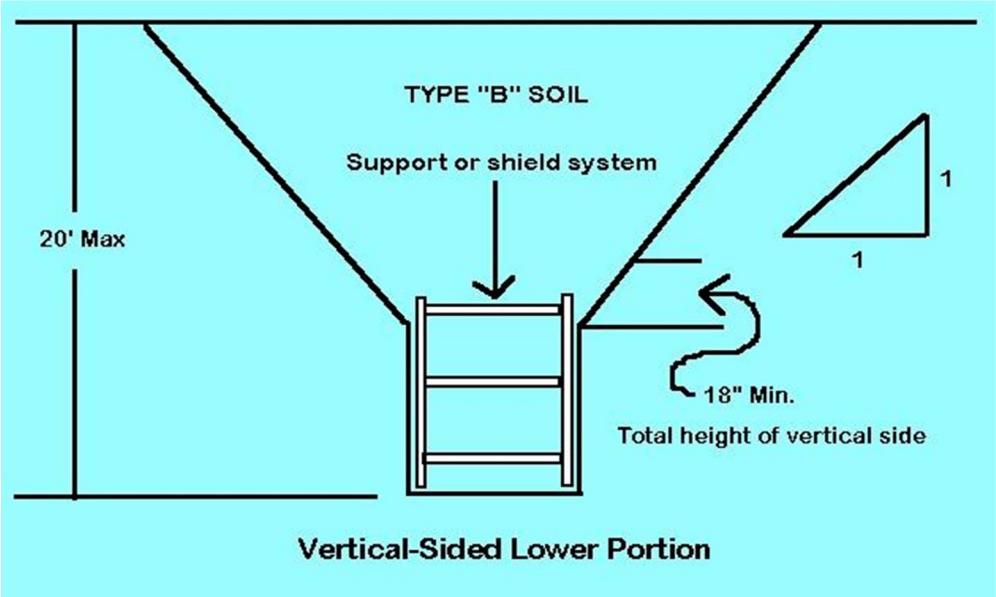

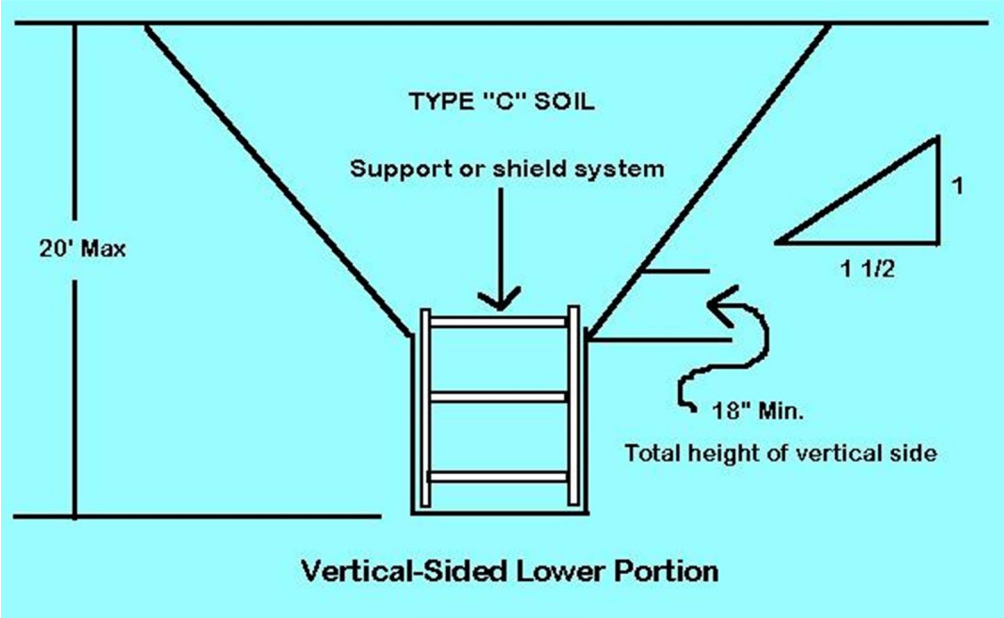

DAILY EXCAVATION CHECKLIST

Client		Date	
Project Name		**Approximate Temp.**	
Project Location		**Approximate Wind Direction**	
Job Number		**Safety Rep**	
Excavation Depth and Width		**Soil Classification**	
Protective System Used			
Activities in Excavation			
Competent Person			

Excavation > 4 feet deep? ___Yes ___No.

If YES, fill out a Confined Space Permit PRIOR to ANY person entering the excavation.

NOTE: Trenches over 4 feet in depth are considered excavations. Any items marked NO on this form MUST be remediated prior to any employees entering the excavation.

YES	**NO**	**N/A**	**DESCRIPTION**
			GENERAL Employees protected from cave-ins & loose rock/soil that could roll into the
			excavation Spoils, materials & equipment set back at least 2 feet from the edge of the
			excavation Engineering designs for sheeting &/or manufacturer's data on trench box
			capabilities on site Adequate signs posted and barricades provided
			Training (toolbox meeting) conducted w/ employees prior to entering excavation

YES	**NO**	**N/A**	**UTILITIES**
			Utility company contacted & given 24 hr notice &/or utilities already located & marked
			Overhead lines located, noted and reviewed with the operator
			Utility locations reviewed with the operator, & precautions taken to ensure contact does not occur
			Utilities crossing the excavation supported, and protected from falling

			materials
			Underground installations protected, supported or removed when excavation is open
			WET CONDITIONS
			Air in the excavation tested for oxygen deficiency, combustibles, other contaminants
			Ventilation used in atmospheres that are oxygen rich/deficient &/or contains hazardous substances
			Ventilation provided to keep LEL below 10 %
			Emergency equipment available where hazardous atmospheres could or do exist
			Safety harness and lifeline used
			Supplied air necessary (if yes, contact safety department)
			ENTRY & EXIT
			Exit (i.e. ladder, sloped wall) no further than 25 feet from ANY employee
			Ladders secured and extend 3 feet above the edge of the trench
			Wood ramps constructed of uniform material thickness, cleated together @ the bottom
			Employees protected from cave-ins when entering or exiting the excavation

KEEP 1 COPY OF EACH DAILY EXCAVATION CHECKLIST ON SITE FOR THE PROJECT DURATION, AND FORWARD THE ORIGINAL TO THE SAFETY MANAGER

SOIL ANALYSIS CHECKLIST

Client		Date	
Project Name		Job #	
Project Location		Weather	
Competent Person			
Where was the sample taken from			
Excavation length, depth and width	L:	D:	W:

VISUAL TEST					
Particle type	Fine Grained (Cohesive)		Granular (sand/silt or gravel)	Other:	
Water Conditions	Wet	Dry	Seeping Water	Surface Water present	Submerged
Notes					
Yes	No	N/A	Description		
			Layered Soils Dipping Into excavation? If yes, describe:		
			Excavation exposed to vibrations? If yes, describe:		
			Previously disturbed soils?		
			Crack like openings or sprawlings observed?		
			Underground utilities? If yes, what type:		
MANUAL TEST			Layered soils? (Note: the least stable layer controls the soil type)		
Plasticity	Cohesive	Non-cohesive	Dry Strength	Cohesive (broken w/ difficulty)	Granular

Wet Shake	Water comes to surface (granular material)	Surface remains dry (clay material)

THUMB TEST Note: Used to estimate unconfined compression strength of cohesive soil.

Test Performed	Yes	No	N/A, Explain:
Soil indented by thumb with very great effort?			
Type A Soil indent by thumb with some effort?			

Type B

Soil easily penetrated several inches by thumb with little or no effort. NOTE: If soil is submerged, seeping water, subjected to surface water, runoff, exposed to wetting.

Type C

PENETROMETER or SHEARVANE TEST Note: Used to estimate unconfined compressive strength of cohesive soils.

Test Performed	Yes	No	Device Used / Serial Number:
Soil with unconfined compressive strength of 1.5 tsf of greater			
Type A Soil with unconfined compressive strength of greater than 0.5 tsf and less than 1.5 tsf.			

Type B

Soil with unconfined compressive strength of 0.5 tsf or less. Note: if the soil is submerged, seeping water, subjected to surface water, runoff, exposed to wetting.

Type C

No soil is Type A if fissured, subject to vibration, previously disturbed, layered dipping into excavation on a slope of 4h: 1v

SOIL CLASSIFICATION			
Stable Rock	Type A	Type B	Type C
SELECTION OF PROTECTIVE SYSTEM (Refer to Appendix F of 29CFR1926)			
Sloping (Appendix B) Specify angle:	Timber Shoring (Appendix C)	Trench Shield Max depth in this soil:	Hydraulic Shoring (Appendix D)

Keep one copy of each Soil Analysis Checklist on site for project duration - Forward original to the Safety Director at the Main Office

Excavation & Trenching

Scope and Application:

This policy sets forth the official practices required for excavations made by PNT Consulting LLC employees on property owned by PNT Consulting LLC.

Definitions:

Aluminum hydraulic shoring means an engineered shoring system comprised of aluminum hydraulic cylinders (crossbraces),used in conjunction with vertical rails (uprights) or horizontal rails (walers). Such a system is designed specifically to support the sidewalls of an excavation and prevent cave-ins.

Benching means a method of protecting employees from cave-ins by excavating the sides of an excavation to form one or a series of horizontal levels or steps, usually with vertical or near-vertical surfaces between levels.

Cave-in means the separation of a mass of soil or rock material from the side of an excavation, or the loss of soil from under a trench shield or support system, and its sudden movement into the excavation, either by falling or sliding, in sufficient quantity so that it could entrap, bury, or otherwise injure and immobilize a person.

Competent person means one who is capable of identifying existing and predictable hazards in the surroundings, or working conditions that are unsanitary, hazardous, or dangerous to employees, and who has authorization to take prompt corrective measures to eliminate them. All competent persons must complete the 4-hour Physical Plant trenching and shoring class, successfully pass the exam, and be certified for successful completion of the class. A competent person should have and be able to demonstrate the following:

Training, experience, and knowledge of:
- soil analysis,
- use of protective systems, and
- requirements of 29 CFR 1926 Subpart P.

Ability to detect:
- conditions that could result in cave-ins,
- failures in protective systems,
- hazardous atmospheres, and
- other hazards including those associated with confined spaces.

Authority to take prompt corrective measures to eliminate existing and predictable hazards and to stop work when required.

Excavation means any man-made cut, cavity, trench, or depression in an earth surface, formed by earth removal.

Registered professional engineer means a person who is registered as a professional engineer.

Shield (shield system) means a structure that is able to withstand the forces imposed on it by a cave-in and thereby protect employees with the structure. Shields can be permanent structure or can be designed to be portable and moved along as work progresses. Also known as trench box or trench shield.

Shoring (shoring system) means a structure such as a metal hydraulic, mechanical or timber shoring system that supports the sides of an excavation and which is designed to prevent cave-ins.

Sloping (sloping system) means a method of protecting employees from cave-ins by excavating to form sides of an excavation that are inclined away from the excavation so as to prevent cave-ins. The angle of incline varies with differences in such factors as the soil type, environmental conditions of exposure, and application of surcharge loads.

Trench (trench excavation) means a narrow excavation (in relation to its length) made below the surface of the ground. In general, the depth is greater than the width, but the width of a trench is not greater than 15 feet. If forms or other structures are installed or constructed in an excavation as to reduce the dimension measured from the forms or structure to the side of the excavation to 15 feet or less, the excavation is also considered to be a trench.

General Requirements:

All excavations shall be made in accordance with the rules, regulations, requirements, and guidelines set forth in 29 CFR 1926.650, .651, and .652; the Occupational Safety and Health Administration's standard on Excavations, except where otherwise noted below.

Procedures:

A competent person shall be placed in charge of all excavations. Underground utilities must be located and marked before excavation begins. Employees are not allowed in the excavation while heavy equipment is digging.

Inspections:

The competent person shall conduct inspections:

Daily and before the start of each shift by using the DAILY EXCAVATION CHECKLIST found at the end of this chapter

As dictated by the work being done in the trench.

After every rain storm.

After other events that could increase hazards, such as snowstorm, windstorm, thaw, earthquake, dramatic change in weather, etc.

When fissures, tension cracks, sloughing, undercutting, water seepage, bulging at the bottom, or other similar conditions occur.

When there is a change in the size, location, or placement of the spoil pile.

When there is any indication of change or movement in adjacent structures.

(For excavations 4 feet or greater in depth, a trench inspection form shall be filled out for each inspection.)

Soil Types:

Type A - Most stable: clay, silty clay, and hardpan (resists penetration). No soil is Type A if it is fissured, is subject to vibration of any type, has previously been disturbed, or has seeping water.

Type B - Medium stability: silt, sandy loam, medium clay and unstable dry rock; previously disturbed soils unless otherwise classified as Type C; soils that meet the requirements of Type A soil but are fissured or subject to vibration.

Type C - Least stable: gravel, loamy sand, soft clay, submerged soil or dense, heavy unstable rock, and soil from which water is freely seeping.

Layered geological strata (where soils are configured in layers) - The soil must be classified on the basis of the soil classification of the weakest soil layer. Each layer

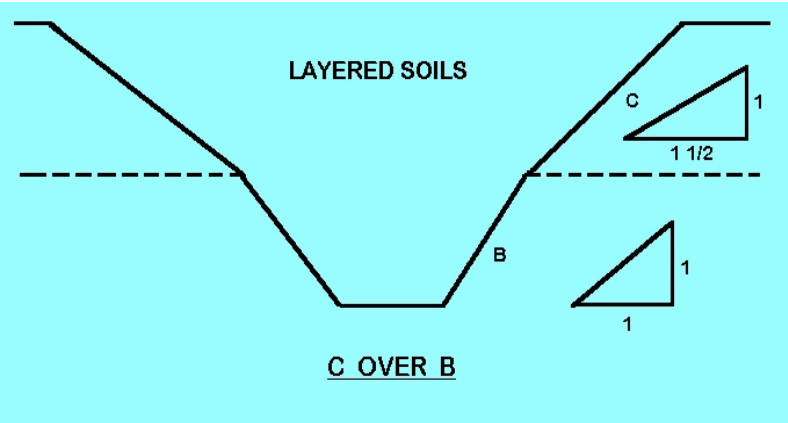

may be classified individually if a more stable layer lies below a less stable layer, i.e. where a Type C soil rests on top of stable rock.

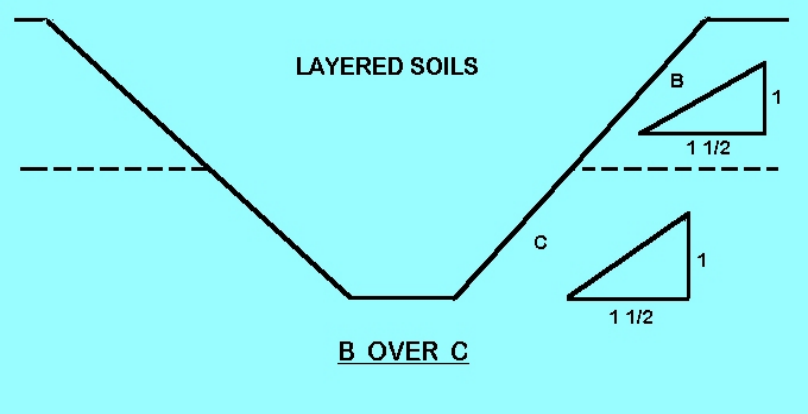

Testing Methods

The competent person in charge of the excavation shall be responsible for determining whether the soil is Type B or C. The competent person shall use a visual test coupled with one or more manual tests.

Visual test

In addition to checking the items on the trench inspection form, the competent person should perform a visual test to evaluate the conditions around the site. In a visual test, the entire excavation site is observed, including the soil adjacent to the site and the soil being excavated. The competent person also checks for any signs of vibration.

During the visual test, the competent person should check for crack-line openings along the failure zone that would indicate tension cracks, look for existing utilities that indicate that the soil has been previously disturbed, and observe the open side of the excavation for indications of layered geologic structuring.

This person should also look for signs of bulging, boiling, or sloughing, as well as for signs of surface water seeping from the sides of the excavation or from the water table.

In addition, the area adjacent to the excavation should be checked for signs of foundations or other intrusions into the failure zone, and the evaluator should check for surcharging and the spoil distance from the edge of the excavation.

Manual tests

Thumb penetration test- Attempt to press the thumb firmly into the soil in question. If the thumb penetrates no further than the length of the nail, it is probably Type B soil. If the thumb penetrates the full length of the thumb, it is Type C. It should be noted that the thumb penetration test is the least accurate testing method.

Dry strength test- Take a sample of dry soil. If it crumbles freely or with moderate pressure into individual grains it is considered granular (Type C). Dry soil that falls into clumps that subsequently break into smaller clumps (and the smaller clumps can only be broken with difficulty) it is probably clay in combination with gravel, sand, or silt (Type B).

Plasticity or Wet Thread Test- Take a moist sample of the soil. Mold it into a ball and then attempt to roll it into a thin thread approximately 1/8 inch in diameter by two inches in length. If the soil sample does not break when held by one end, it may be considered Type B.

A pocket penetrometer, shearvane, or torvane may also be used to determine the unconfined compression strength of soils.

Spoil

Temporary spoil shall be placed no closer than 2 feet from the surface edge of the excavation, measured from the nearest base of the spoil to the cut. This distance should not be measured from the crown of the spoil deposit. This distance requirement ensures that loose rock or soil from the temporary spoil will not fall on employees in the trench.

Spoil should be placed so that it channels rainwater and other run-off water away from the excavation. Spoil should be placed so that it cannot accidentally run, slide, or fall back into the excavation.

Permanent spoil should be placed some distance from the excavation.

Surface Crossing of Trenches

Surface crossing of trenches should not be made unless absolutely necessary. However, if necessary, they are only permitted under the following conditions:

Vehicle crossings must be designed by and installed under the supervision of a registered professional engineer.

Walkways or bridges must: have a minimum clear width of 20 inches, be fitted with standard rails, and extend a minimum of 24 inches past the surface edge of the trench.

Ingress and Egress

Trenches 4 feet or more in depth shall be provided with a fixed means of egress.

Spacing between ladders or other means of egress must be such that a worker will not have to travel more than 25 feet laterally to the nearest means of egress.

Ladders must be secured and extend a minimum of 36 inches above the landing.

Metal ladders should be used with caution, particularly when electric utilities are present.

Exposure to Vehicles

Employees exposed to vehicular traffic shall be provided with and required to wear reflective vests or other suitable garments marked with or made of reflectorized or high-visibility materials.

Trained flag persons, signs, signals, and barricades shall be used when necessary.

Exposure to Falling Loads

All employees on an excavation site must wear hard hats.

Employees are not allowed to work under raised loads.

Employees are not allowed to work under loads being lifted or moved by heavy equipment used for digging or lifting.

Employees are required to stand away from equipment that is being loaded or unloaded to avoid being struck by falling materials or spillage.

Equipment operators or truck drivers may remain in their equipment during loading and unloading if the equipment is properly equipped with a cab shield or adequate canopy.

Warning Systems for Mobile Equipment

The following steps should be taken to prevent vehicles from accidentally falling into the trench:

Barricades must be installed where necessary,

Warning Systems for Mobile Equipment (continued)

Hand or mechanical signals must be used as required,

Stop logs must be installed if there is danger of vehicles falling into the trench.

Soil should be graded away from the excavation; this will assist in vehicle control and channeling of run-off water.

Trenches left open overnight shall be fenced and barricaded

Hazardous Atmospheres and Confined Spaces

Employees shall not be permitted to work in hazardous and/or toxic atmospheres. Such atmospheres include those with:

less than 19.5% oxygen,
a combustible gas concentration greater than 20% of the lower flammable limit, and,
concentrations of hazardous substance that exceed those specified in the Threshold Limit Values for airborne contaminants established by the ACGIH.

All operations involving such atmospheres must be conducted in accordance with OSHA requirements for occupational health and environmental controls for personal protective equipment and for lifesaving equipment. Engineering controls (such as ventilation) and respiratory equipment may be required.

Testing for Atmospheric Contaminants

If there is any possibility that the trench or excavation could contain a hazardous atmosphere, atmospheric testing must be conducted prior to entry. Conditions that might warrant atmospheric testing would be if the excavation was made in a landfill area or if the excavation was crossed by, was adjacent to, or contained pipelines containing a hazardous material (for example, natural gas lines).

Testing should be conducted before employees enter the trench and should be done regularly to ensure that the trench remains safe. The frequency of testing should be increased if equipment is operating in the trench.

Testing for Atmospheric Contaminants (continued)

Testing frequency should also be increased if welding, cutting, or burning is done in the trench.

Employees required to wear respiratory protection must be trained, fit-tested, and enrolled in a respiratory protection program.

Some trenches qualify as confined spaces. When this occurs, compliance with the PNT Consulting LLC Confined Space Program is also required.

Standing Water and Water Accumulation

Methods for controlling standing water and water accumulation must be provided and should consist of the following if employees must work in the excavation:

Use of special support or shield systems approved by a registered professional engineer.

Water removal equipment, such as well pointing, used and monitored by a competent person.

Safety harnesses and lifelines used in conformance with 29 CFR 1926.104.

Employees removed from the trench during rainstorms

Trenches carefully inspected by a competent person after each rain and before employees are permitted to re-enter the trench.

Benching, Sloping, Shoring, and Shielding Requirements

All excavations or trenches 4 feet or greater in depth shall be appropriately benched, shored, or sloped according to the procedures and requirements set forth in OSHA's Excavation standard, 29 CFR 1926.650, .651, and .652.

Excavations or trenches 20 feet deep or greater must have a protective system designed by a registered professional engineer.

Excavations under the base of footing of a foundation or wall requires a support system designed by a registered professional engineer.

Sidewalks and pavement shall not be undermined unless a support system or another method of protection is provided to protect employees from their possible collapse.

Sloping

Maximum allowable slopes for excavations less than 20' based on soil type and angle to the horizontal are as follows:

Soil Type	Height/depth ratio	Slope angle
Type B	1:1	45 degrees
Type C	1 1/2:1	34 degrees

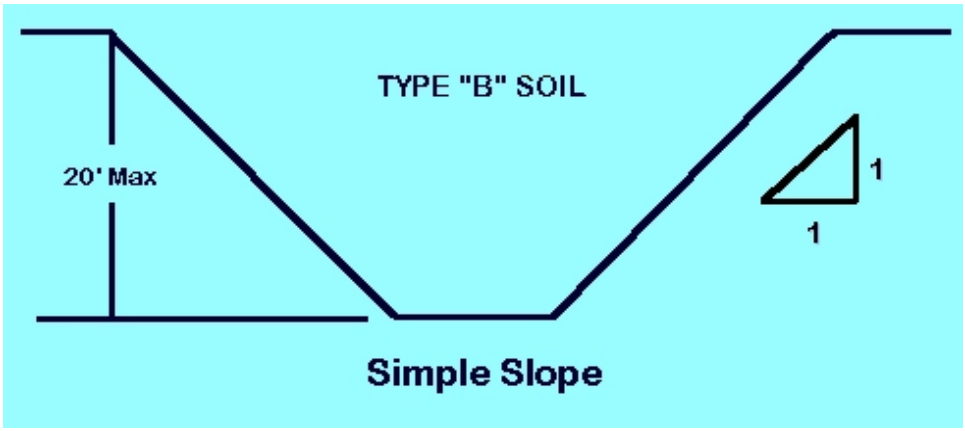

A 10-foot-deep trench in Type B soil would have to be sloped to a 45-degree angle, or sloped 10 feet back in both directions. Total distance across a 10-foot-deep trench would be 20 feet, plus the width of the bottom of the trench itself. In Type C soil, the trench would be sloped at a 34-degree angle, or 15 feet back in both directions for at least 30 feet across, plus the width of the bottom of the trench itself.

All simple slope excavations 20 feet or less in depth shall have a maximum allowable slope of 1 1/2:1.

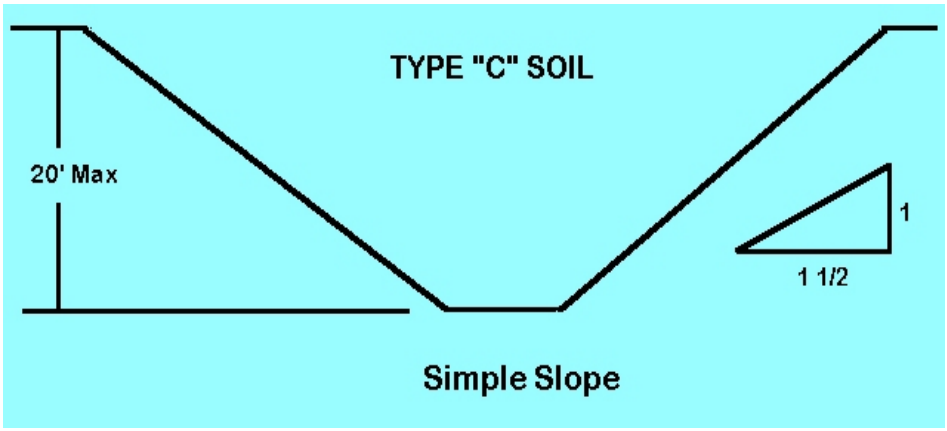

Benching

There are two basic types of benching, single and multiple, which can be used in conjunction with sloping.

All benched excavations 20 feet or less in depth shall have a maximum allowable slope of 1:1.

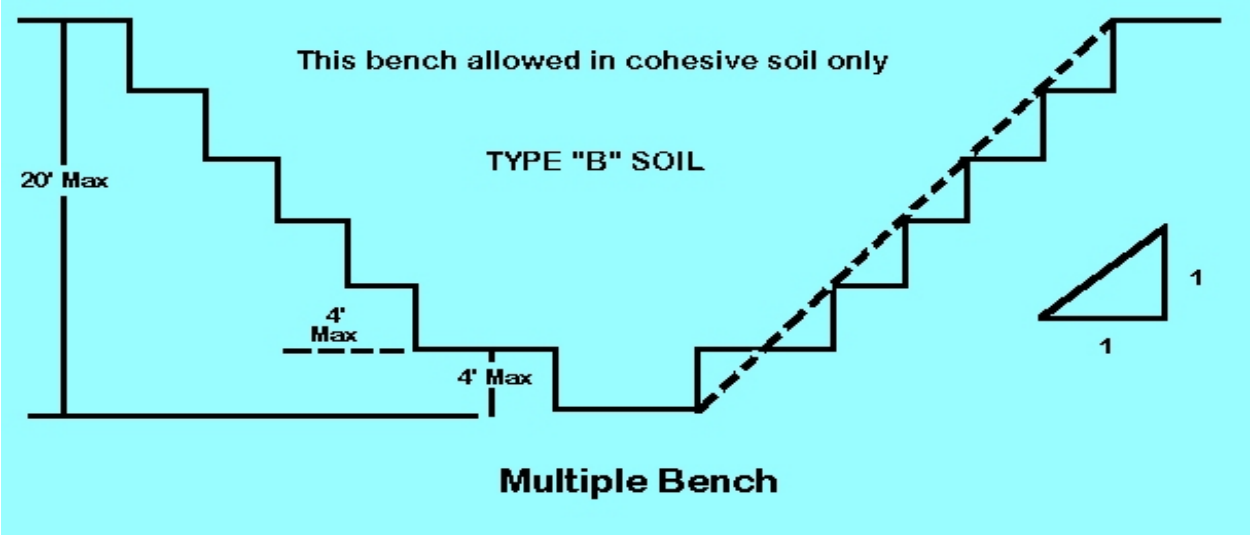

In Type B soil, the vertical height of the benches must not exceed 4 feet. Benches must be below the maximum allowable slope for that soil type. In other words, a 10-foot deep trench in Type B soil must be benched back 10 feet in each direction, with the maximum of a 45-degree angle.

Benching is not allowed in Type C soil.

Shoring

Shoring or shielding is used when the location or depth of the cut makes sloping back to the maximum allowable slope impractical. There are two basic types of shoring, timber and aluminum hydraulic.

Hydraulic shoring provides a critical safety advantage over timber shoring because workers do not have to enter the trench to install them. They are also light enough to be installed by one worker; they are gauge-regulated to ensure even distribution of pressure along the trench line; and they can be adapted easily to various trench depths and widths. However, if timber shoring is used, it must meet the requirements of 29 CFR 1926.650, .651, and .652.

All shoring shall be installed from the top down and removed from the bottom up. Hydraulic shoring shall be checked at least once per shift for leaking hoses and/or cylinders, broken connections, cracked nipples, bent bases, and any other damaged or defective parts.

The top cylinder of hydraulic shoring shall be no more than 18 inches below the top of the excavation.

The bottom of the cylinder shall be no higher than four feet from the bottom of the excavation. (Two feet of trench wall may be exposed beneath the bottom of the rail or plywood sheeting, if used.)

Three vertical shores, evenly spaced, must be used to form a system.

Wales are installed no more than two feet from the top, no more than four feet from the bottom, and no more than four feet apart, vertically.

Here are some typical installations of aluminum hydraulic shoring:

- Vertical aluminum hydraulic shoring (spot bracing)

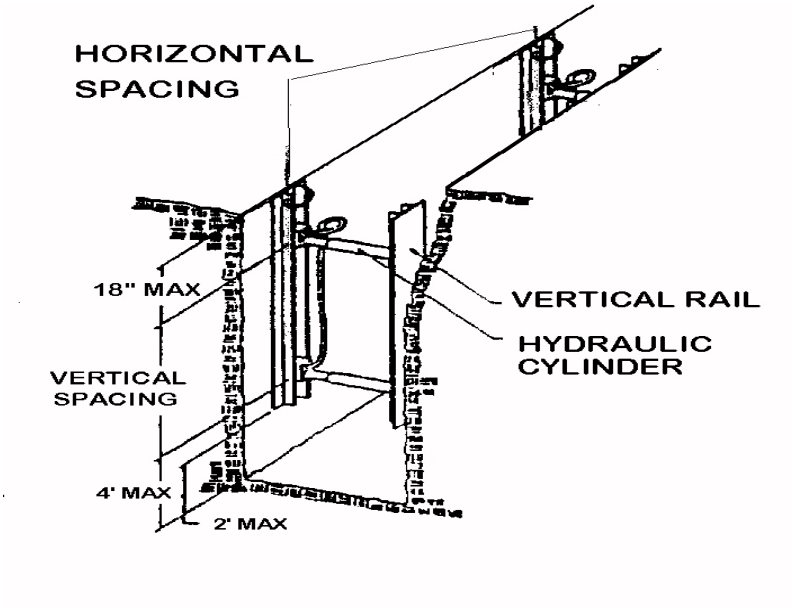

Excavation & Trenching

- Vertical aluminum hydraulic shoring (with plywood)

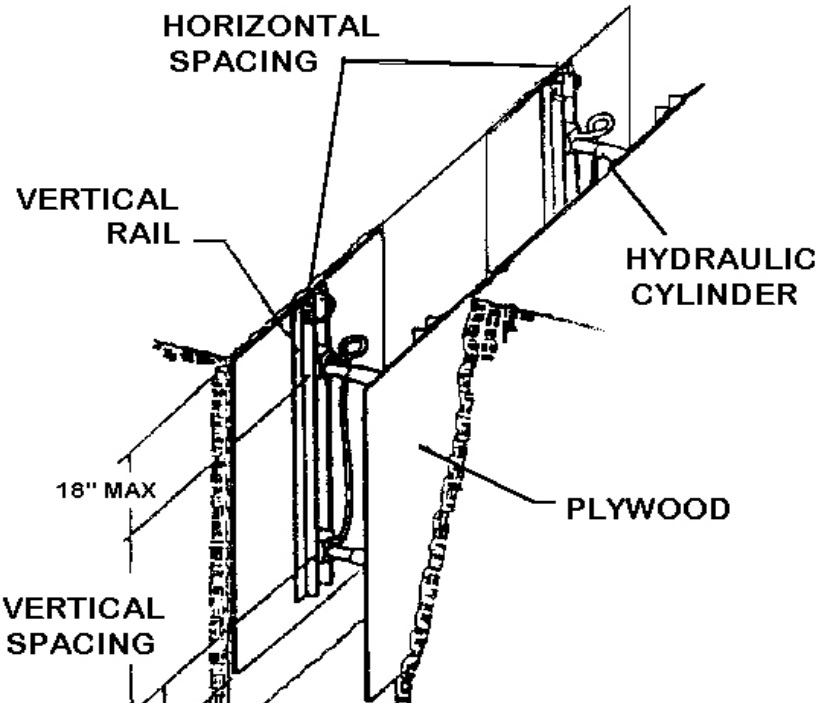

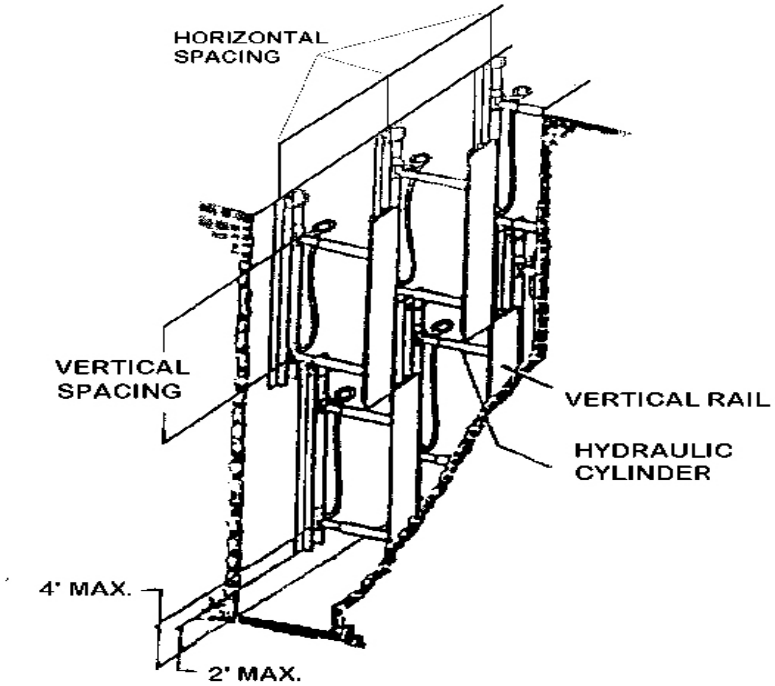

- Vertical aluminum hydraulic shoring (stacked)

- Aluminum hydraulic shoring waler system (typical)

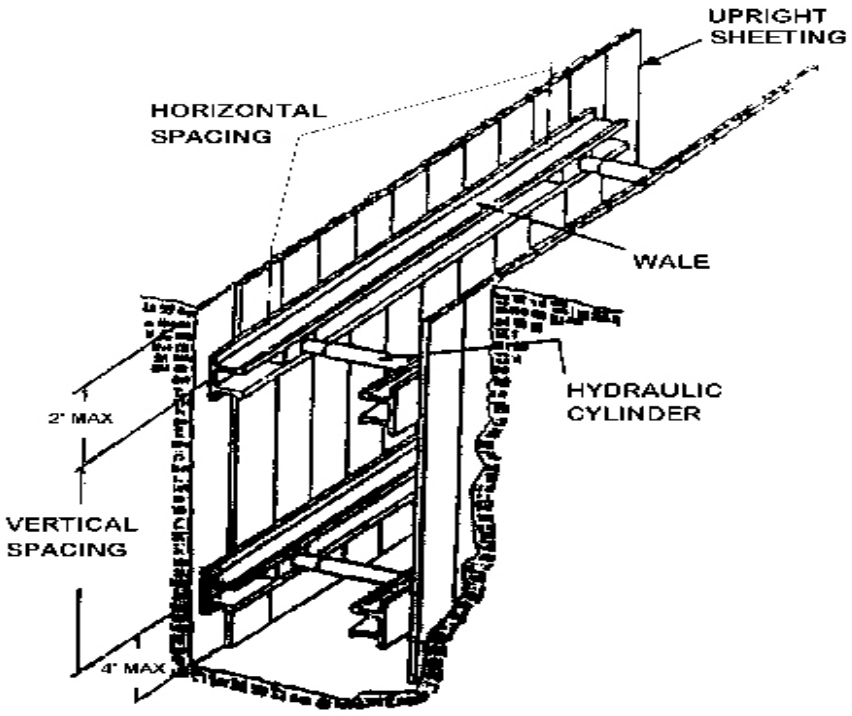

Shielding

Trench boxes are different from shoring because, instead of shoring up or otherwise supporting the trench face, they are intended primarily to protect workers from cave-ins and similar incidents.

The excavated area between the outside of the trench box and the face of the trench should be as small as possible. The space between the trench box and the excavation side must be backfilled to prevent lateral movement of the box. Shields may not be subjected to loads exceeding those which the system was designed to withstand.

Trench boxes are generally used in open areas, but they also may be used in combination with sloping and benching.

The box must extend at least 18 inches above the surrounding area if there is sloping toward the excavation. This can be accomplished by providing a benched area adjacent to the box.

Any modifications to the shields must be approved by the manufacturer.

Shields may ride two feet above the bottom of an excavation, provided they are calculated to support the full depth of the excavation and there is no caving under or behind the shield.

Workers must enter and leave the shield in a protected manner, such as by a ladder or ramp.

Workers may not remain in the shield while it is being moved.

Illustration of shielding systems in B and C type soils.

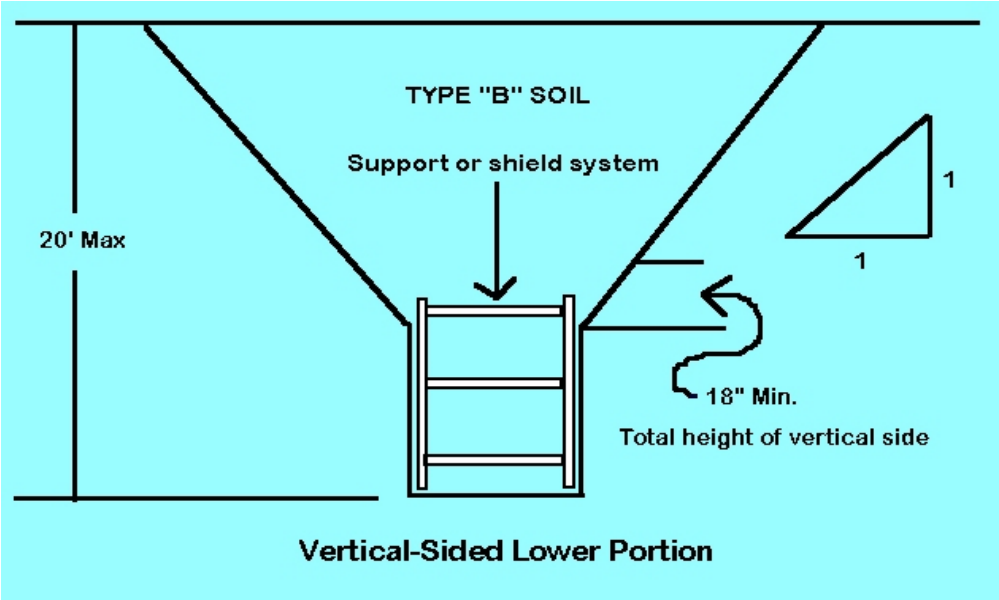

Excavation & Trenching

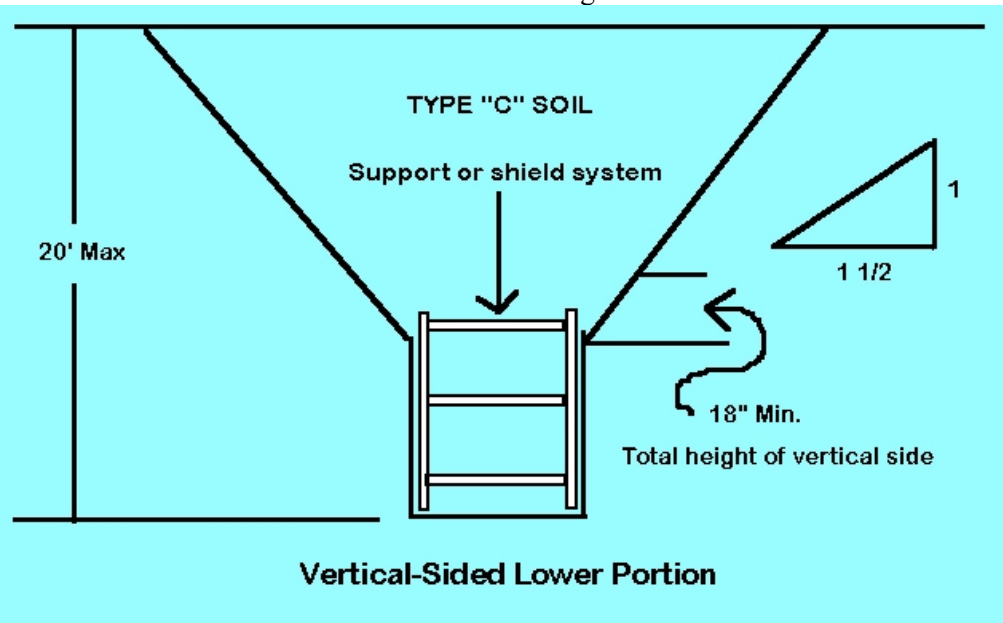

Excavation & Trenching

DAILY EXCAVATION CHECKLIST

Client		Date	
Project Name		**Approximate Temp.**	
Project Location		**Approximate Wind Direction**	
Job Number		**Safety Rep**	
Excavation Depth and Width		**Soil Classification**	
Protective System Used			
Activities in Excavation			
Competent Person			

Excavation > 4 feet deep? ___Yes ___No.

If YES, fill out a Confined Space Permit PRIOR to ANY person entering the excavation.

NOTE: Trenches over 4 feet in depth are considered excavations. Any items marked NO on this form MUST be remediated prior to any employees entering the excavation.

YES	NO	N/A	DESCRIPTION
			GENERAL
			Employees protected from cave-ins & loose rock/soil that could roll into the excavation
			Spoils, materials & equipment set back at least 2 feet from the edge of the excavation
			Engineering designs for sheeting &/or manufacturer's data on trench box capabilities on site
			Adequate signs posted and barricades provided
			Training (toolbox meeting) conducted w/ employees prior to entering excavation

YES	NO	N/A	UTILITIES
			Utility company contacted & given 24 hr notice &/or utilities already located & marked
			Overhead lines located, noted and reviewed with the operator

			Utility locations reviewed with the operator, & precautions taken to ensure contact does not occur
			Utilities crossing the excavation supported, and protected from falling materials
			Underground installations protected, supported or removed when excavation is open
			WET CONDITIONS
			Air in the excavation tested for oxygen deficiency, combustibles, other contaminants
			Ventilation used in atmospheres that are oxygen rich/deficient &/or contains hazardous substances
			Ventilation provided to keep LEL below 10 %
			Emergency equipment available where hazardous atmospheres could or do exist
			Safety harness and lifeline used
			Supplied air necessary (if yes, contact safety department)
			ENTRY & EXIT
			Exit (i.e. ladder, sloped wall) no further than 25 feet from ANY employee
			Ladders secured and extend 3 feet above the edge of the trench
			Wood ramps constructed of uniform material thickness, cleated together @ the bottom
			Employees protected from cave-ins when entering or exiting the excavation

KEEP 1 COPY OF EACH DAILY EXCAVATION CHECKLIST ON SITE FOR THE PROJECT DURATION, AND FORWARD THE ORIGINAL TO THE SAFETY MANAGER

Excavation & Trenching

SOIL ANALYSIS CHECKLIST

Client		Date	
Project Name		Job #	
Project Location		Weather	
Competent Person			
Where was the sample taken from			
Excavation length, depth and width	L:	D:	W:

VISUAL TEST					
Particle type	Fine Grained (Cohesive)		Granular (sand/silt or gravel)	Other:	
Water Conditions	Wet	Dry	Seeping Water	Surface Water present	Submerged
Notes					

Yes	No	N/A	Description
			Layered Soils Dipping Into excavation? If yes, describe:
			Excavation exposed to vibrations? If yes, describe:
			Previously disturbed soils?
			Crack like openings or sprawlings observed?
			Underground utilities? If yes, what type:
			Layered soils? (Note: the least stable layer controls the soil type)

MANUAL TEST					
Plasticity	Cohesive	Non-cohesive	Dry Strength	Cohesive (broken w/ difficulty)	Granular
Wet Shake	Water comes to surface (granular material)		Surface remains dry (clay material)		

THUMB TEST Note: Used to estimate unconfined compression strength of cohesive soil.			
Test Performed	Yes	No	N/A, Explain:
Soil indented by thumb with very great effort?			Type A
Soil indent by thumb with some effort?			Type B
Soil easily penetrated several inches by thumb with little or no effort. NOTE: If soil is submerged, seeping water, subjected to surface water, runoff, exposed to wetting.			Type C

PENETROMETER or SHEARVANE TEST Note: Used to estimate unconfined compressive strength of cohesive soils.			
Test Performed	Yes	No	Device Used / Serial Number:
Soil with unconfined compressive strength of 1.5 tsf of greater			Type A
Soil with unconfined compressive strength of greater than 0.5 tsf and less than 1.5 tsf.			Type B
Soil with unconfined compressive strength of 0.5 tsf or less. Note: if the soil is submerged, seeping water, subjected to surface water, runoff, exposed to wetting.			Type C

No soil is Type A if fissured, subject to vibration, previously disturbed, layered dipping into excavation on a slope of 4h: 1v

SOIL CLASSIFICATION			
Stable Rock	Type A	Type B	Type C
SELECTION OF PROTECTIVE SYSTEM (Refer to Appendix F of 29CFR1926)			
Sloping (Appendix B)	Timber Shoring	Trench Shield	Hydraulic Shoring

Excavation & Trenching

Specify angle:	(Appendix C)	Max depth in this soil:	(Appendix D)

Keep one copy of each Soil Analysis Checklist on site for project duration - Forward original to the Safety Director at the Main Office

Excavation & Trenching Program

Policy

Work activities where employees may be subject to falls and/or falling objects shall be conducted safely with associated hazards eliminated and/or controlled.

This policy covers minimum performance standards applicable to all* PNT CONSULTING LLC *Associates employees and locations. Local practices requiring more detailed or stringent rules, or local, state or other federal requirements regarding this subject can and should be added as an addendum to this procedure as applicable.

Purpose

To ensure that employees are protected from the hazards associated falls and falling objects.

Scope

Applies to all **PNT CONSULTING LLC** Associates work sites, i.e., **PNT CONSULTING LLC** offices, client job sites, etc., where field construction related activities involve exposure to heights greater than or equal to six (6) feet and/or falling objects exist. In general industry (e.g. offices, shops, warehouses, etc.) exposure to heights greater than or equal to four (4) feet shall be in place of all references to the construction six (6) foot reference.

Definitions

Anchorage means a secure point of attachment for lifelines, lanyards, or deceleration devices that is capable of supporting 5,000 lbs. per employee or two times the intended impact load, whichever is greater, or for a positioning system, 3,000 lbs. without failure.

Approved means, for the purpose of this section, authorized by the Branch Safety Officer, tested and certified by the manufacturer or any recognized national testing laboratory to possess the strength requirements specified in this section.

Catenary Line – see **Horizontal Lifeline**.

Competent Person means an individual knowledgeable (through experience and/or training) of fall protection equipment, including the manufacturer's recommendations and instructions for the proper use, inspection, and maintenance; who is capable of identifying existing and potential fall hazards; who has the authority to take prompt corrective action to eliminate those hazards; and who is knowledgeable of the rules contained in this section regarding the erection, use, inspection, and maintenance of fall protection equipment and systems.

Controlled Access Zone means an area in which certain work may take place without the use of guardrail systems, personal fall arrest systems, or safety net systems and access to the zone is controlled.

Deceleration Device means a device manufactured (fall) shock-absorbing device whereby the forces of the fall are rapidly reduced to meet acceptable levels.

Drop Line means a vertical lifeline secured to an upper anchorage for the purpose of attaching a lanyard or device.

Employee means every laborer regardless of title or contractual relationship.

Fall Arrest System (Personal) means the use of multiple, approved safety equipment components such as body harnesses, shock absorbing lanyards, deceleration devices, droplines, horizontal and/or vertical lifelines and anchorages, interconnected and rigged to ones body as to arrest a free fall.

Fall Protection Work Plan means a written planning document in which the employer identifies areas in the work area where a fall hazard of 6 feet or greater exists, whereby conventional Fall Restraint and Fall Arrest Systems cannot be utilized.

Fall Restraint System means an approved device and any necessary components that function together to restrain an employee in such a manner as to prevent that employee from falling to a lower level.

Fall Distance means the actual distance from the employee's work platform (area) to the level where a fall would stop (ground level or otherwise).

Full Body Harness means a configuration of connection straps to distribute a fall arresting force over at least the thighs, shoulders and pelvis, with provisions for attaching a lanyard, lifeline, positioning rings, or deceleration devices.

Full Body Harness System means a Class III full body harness and shock absorbing lanyard attached to an anchorage or attached to a horizontal or vertical lifeline which is properly secured to an anchorage(s) capable of withstanding the forces specified in the applicable sections.

Hardware means snap hooks, D-rings, buckles, carabiniers, and adjusters used to attach the components of a fall protection system together.

Holes (floor, roof or walking surface) means any opening in the floor greater than two inches whereby falling objects or an employee fall equal to, or greater than six foot is possible.

Holes (wall) – see **Wall Opening**.

Horizontal Lifeline means an approved rail, rope, or synthetic cable installed in a horizontal plane between two anchorages and used for attachment of a employee's lanyard or lifeline device while moving horizontally.

Lanyard means a flexible line of webbing, rope or cable (usually in two, four or six foot lengths) used to secure a harness to a lifeline or an anchorage point.
Leading Edge means the advancing edge of a floor or roof, where a fall of more than six foot is possible to the ground or to another level.

Lifeline (vertical or horizontal) means an approved vertical line from a fixed overhead anchorage or horizontal line between two horizontal anchorages, independent of walking or working surfaces, to which a lanyard or device is secured.

Restraint Line means a line from a fixed anchorage or between two anchorages to which an employee is secured in such a way as to restrict the employee from reaching a point where falling to a lower level is possible.

Safety Line – see **Lifeline**.

Shock Absorbing Lanyard means a flexible line of webbing or rope used to secure a harness to a lifeline or anchorage point that has an integral shock absorber of either a rip-stitch or retractable configuration.

Snaphook – means a 'locking' hook at the end of a lanyard or restraining/positioning line that has a double-action locking mechanism intended to eliminate unintentional unhooking from the D-ring of a body harness. Non-locking snaphooks are prohibited.

Standard Guardrail means a toprail at 42 inches high (plus or minus three inches), a midrail installed midway the top edge of the guardrail system and the surface.

Static Line – see **Lifeline**.

Toeboard means a barrier at the base of the guardrail system to prevent material and objects from falling off the surface. They are at least four (4) inches of nominal height with no less than one (1) inch clearance from the surface.

Unprotected Sides and Edges means any side or edge (except at entrances to points of access) of a floor, roof, ramp, or runway where there is no wall or guardrail system.

Walking/Working Surface means for the purpose of this section, any area whose dimensions are 45 inches or greater in all directions through which employees pass or conduct work, and can include scaffolding and aerial lifts regardless of surface dimensions.

Wall Opening means a gap in a wall where the outside bottom edge is 6 feet or more above lower levels, and the inside bottom edge (e.g. parapit wall) is less than 39 inches above the walking/working surface.

Work Area means that portion of a walking/working surface where work activities are being performed.

Requirements

Training

Fall Protection training requirements shall include:

1. New employees with work responsibilities requiring the use of fall protection will be oriented to the PNT Consulting LLC Fall Protection Program (and any local addendums) as part of the 'new employee orientation program'.

2. At new worksites, i.e. **PNT CONSULTING LLC** offices, client job sites, etc., during the pre-job meeting to describe specific fall protection requirements of the job.

3. Thereafter, every foreseeably exposed employee will be trained at least annually, and include the following:

    - The nature of fall hazards in the typical work area
    - The correct procedures for erecting, maintaining, disassembling, and inspecting fall protection systems
    - The use and operation of conventional and non-conventional fall protection systems
    - The role of each employee in the safety monitoring system when such a system is in use
    - The limitations on the use of mechanical equipment during the performance of roof work on low-slope roofs
    - The correct procedures for equipment and materials handling and storage, and the erection of overhead protection
    - The correct fit, maintenance and use of (personal) fall arrest system components, as determined by the manufacturer(s)
    - Rescue procedures in the event an individual falls
    - All other details in this section (local addendums)

Toolbox talks for related issues of this manual section shall be covered periodically.

Retraining shall also occur whenever deficiencies in the training program are identified, standard requirements change or are modified or new fall protection systems are introduced.

Any employee who has not received orientation or annual training (as previously outlined) shall not be allowed to work at heights identified by this section.

Training provided shall be documented and maintained in a training file at the Branch Office. Training will include dates of training, instructor's name, toAVETTA / material covered and attendee names.

Conventional Fall Arrest and Fall Restraints Systems shall be utilized where the exposure to falls greater than 6 foot and from falling objects as is reasonably foreseen. The following systems shall be utilized:

Guardrail System (fall restraint and potentially from falling objects)

Toprails and midrails of guardrail systems constructed of wood shall be at least ¼ inch diameter or thickness to prevent cuts and lacerations.

If wire rope is used for toprails, it shall be flagged at not more 6 feet intervals with high-visibility material. Steel and plastic banding are prohibited for use as toprails or midrails.

The top edge height of toprails, or (equivalent) guardrails shall be 42 inches, plus or minus 3 inches, above the walking/working level.

When employees are using ladders in distance proximity equivilent to the maximum use-length of the ladder, the top edge height of the top rail, or equivalent member, shall be increased an amount equal to the maximum use-length height of the ladder, **or** see **Special Control Procedures** (5.4.5) portion (for ladders) of this manual section for other options.

Screens, midrails, mesh, intermediate vertical members, or equivalent intermediate structural members shall be installed between the top edge of the guardrail system and the walking/working surface when there are no walls or parapet walls at least 21 inches high. When midrails are used, they shall be installed at a height midway between the top edge of the guardrail system and the walking/working level. When screens and mesh are used, they shall extend from the top rail to the walking/working level. Intermediate members, such as balusters, when used between posts, will not be more than 19 inches apart.

The guardrail system shall be capable of withstanding a force of at least 200 pounds of force applied within 2 inches of the top edge in any outward or downward direction. When the 200 pounds is applied in a down-ward direction, the top edge of the guardrail shall not deflect to a height less than 39 inches above the walking/working level.

Midrails, screens, mesh, intermediate vertical members, solid panels, and equivalent structural members will be capable of withstanding a force of at least 150 pounds of force applied in any downward or outward direction at any point along the midrail or other member.

Guardrail systems shall be free of sharp edges and burrs to protect against punctures or lacerations and to prevent clothing from snagging.

The ends of top rails and midrails shall not overhang terminal posts, except where such an overhang does not constitute a projection hazard.

When guardrail systems are used at hoisting areas, a chain, gate or removable guardrail section shall be placed across the access opening between guardrail sections when hoisting operations are not taking place.
At uncovered holes, guardrail systems shall be set up on unprotected sides or edges. When holes are used for the passage of materials, the hole shall have not more than two sides with removable guardrail sections. When the hole is not in use, it shall be covered or provided with guardrails along unprotected sides/edges.

If guardrail systems are used around uncovered holes that are used as access points (such as ladderways), gates shall be used or the guardrail shall be offset at a 45 degree angle to prevent accidental walking into the hole. Toeboards shall be utilized around the edges not utilized as the actual access point.

If guardrails are used at unprotected sides or edges of ramps and runways, they shall be erected on each unprotected side/edge.

When guardrail systems, in combination with netting, is used to prevent materials from falling from one level to another, openings shall be small enough to prevent passage of potential falling objects.

Covers for Holes (fall restraint and from falling objects)

Covers (or a guardrail system with toe boards…see Guardrail Systems within this section) shall be installed over holes equal to or greater then 2” in floors, roofs and walkways that are more than 6 feet above lower levels.

Hole covering material shall support at least two times the potential weight that will cross over it. If plywood is chosen as the cover material, it shall be of at least ¾ inch in thickness.

Hole covers shall be secured in place in such a manner as to not easily be displaced. Examples of securing methods include, but are not limited to: nailing, attached cleats, wire, etc.

Such covers shall have the word 'HOLE' or 'COVER' predominately marked on the top surface. Where covers are too small for such marking, they shall be painted or significantly marked in the color orange.

Restraining/Positioning System (fall restraint)

Only full body harness systems with positioning rings are to be utilized with any restraining/positioning system.

Restraint line (rope) length shall not exceed the distance to fall exposure, and shall be secured to an anchorage capable of supporting at least twice the potential impact load of an employee's fall or 3,000 pounds, whichever is greater.

Requirements for body harness systems, snaphooks, D-rings, and other connectors used with positioning device systems shall meet the same criteria as those for fall arrest systems (5.2.4) of this section.

No makeshift fall protection equipment may be utilized.

Body belts are prohibited.

(Personal) Fall Arrest System (fall arrest)

(Personal) Fall Arrest Systems shall do all of the following:

- Limit maximum arresting force on an employee to 1,800 pounds. Note: total body weight including tools cannot exceed 310 lbs. to stay under arresting force limit
- Be rigged so that an employee can neither free fall more than 6 feet nor contact any lower level
- Bring an employee to a complete stop and limit maximum deceleration distance an employee travels to 3.5 feet
- Have sufficient strength to withstand 5000 lbs. (excluding horizontal lifelines which require a safety factor of at least two times the potential impact energy)
- All components of the (personal) fall arrest system (lanyards, body harness and attached hardware, and shock-absorbing devices) shall meet the design specifications of OSHA 1926.502 Subpart M

The following items/actions are prohibited for use with (personal) fall arrest systems:

- body belts
- non-locking snaphooks
- lanyards without shock absorbers
- tying back to the lanyard (once around another object) for a means of an anchorage point, unless the lanyard was designed for this purpose by the manufacturer, the object tied around can support the anticipated fall force and the object does not have sharp edges or burrs

(Personal) fall arrest systems shall be utilized in the following manner:

Pre-Use Inspection

All components shall be inspected prior to each use for wear damage, and other deterioration in accordance with manufacturer's requirements (see equipment inspection and maintenance procedures of this section).

General Proper Body Harness Fit Guidelines (two employees are usually required to completely fit each other)

The body harness type and size shall meet the physical needs of its user (male/female or small, medium, large, etc.).

Follow the manufacturer's guidelines on proper fit.

Shoulder, thigh, button and chest straps shall be fit snugly whereas it is slightly difficult to slide the hand underneath.
Loose straps ends shall be folded back under.

D-ring placement should be between the shoulder-blades.

Chest straps should be positioned across the mid-chest area.

Sufficient Anchorage Points Utilized

Anchorages shall be used under the supervision of a competent person, as part of a complete (personal) fall arrest system that maintains a safety factor of at least two (i.e., capable of supporting at least twice the weight expected to be imposed upon it).

Anchorages used to attach (personal) fall arrest systems will be independent of any anchorage being used to support or suspend platforms and shall be capable of supporting at least 5,000 pounds of force per person attached.

Anchorage points can include:

- Lifelines (horizontal and vertical)
- Designed anchorage points on aerial lifts
- Eye-bolts listed for use by the manufacturer
- Specially designed anchorage tools specifically designed to meet fall force requirements, including:
- Wrap-around lanyards as approved by the manufacturer
- I-beam clamps designed specifically as an anchorage point

Prohibited anchorage points include, but are not limited to:

- Standard guardrails and railing
- Ladders/rungs
- Scaffolding, unless approved by the manufacturer for/with anchorage points
- Light fixtures, ductwork, conduit, pipe vents, wiring/duct/piping harnesses, other roof stacks, vents or fans
- C-clamps
- Piping (unless capable of meeting the criteria of an anchorage point)
- To a lanyard (around a solid object), unless the lanyard and hardware is manufactured for that purpose

Lifeline/Lanyard Applications

Lanyards shall only be attached to anchorage points sufficient to meet the fall force requirements.

Shock-absorbing lanyards are required to limit the fall force to less than 1800 pounds.

Self-retracting lanyards (retractables) capable of withstanding the tensile load of 3,000 lbs. that limit the free fall distance to two (2) feet or less are always recommended and **are required when the fall distance is less than ninteen and one-half (19.5) feet**.
Lanyards that do not limit free fall distance to 2 feet or less, such as ripstitch lanyards and tearing/deforming lanyards will be capable of sustaining a minimum tensile load of 5,000 pounds applied to the device with the lifeline or lanyard in the fully extended position.

Horizontal lifelines will be designed, installed, and used under the supervision of a Competent Person, as part of a complete (personal) fall arrest system. Lifelines shall be protected against being cut or abraded. Horizontal lifelines cannot exceed sixty feet in length.

Vertical lifelines shall be utilized with leading edge work, shall reach the ground, and the method of anchorage attachment shall be of proper design (i.e. no knots).

Safety Net System (fall arrest and potentially from falling objects)

When utilized, safety nets shall be installed as close as practicable under the walking/working surface on which employees are working and never more than 30 feet below such levels.

Safety nets will be inspected at least once a week for wear, damage, and other deterioration. The maximum size of each safety net mesh opening will not exceed 36 square inches nor be longer than 6 inches on any side, and the openings, measured center-to-center, of mesh ropes or webbing, will not exceed 6 inches.

Defective/unfit nets are not to be used and are to be taken from service and immediately destroyed by cutting into unuseful sizes and properly disposed.

Mesh crossings will be secured to prevent enlargement of the mesh opening. Each safety net or section will have a border rope for webbing with a minimum breaking strength of 5,000 pounds.

Connections between safety net panels will be as strong as integral net components and be spaced no more than 6 inches apart.

Safety nets shall extend outward from the outermost projection of the work surface as follows:

Vertical distance from working level to horizontal plane of net surface.	Minimum required horizontal distance of outer edge of net from edge of working surface.
Up to 5 feet	8 feet
More than 5 feet up to10 feet	10 feet
More than 10 feet	13 feet

Safety nets shall be tested at the beginning of each workday and shall be capable of absorbing an impact force of a drop test consisting of a 400-pound bag of sand 30 inches in diameter dropped

from the highest walking/working surface at which workers are exposed, but not from less than 42 inches above that level. Employees shall not be allowed in work areas controlled with safety nets until this test is complete.
If safety nets are utilized for the dual purpose of employee fall protection and the protection of other workers from fall objects, the net webbing opening shall be small enough to prevent passage of potential falling objects.

Items that have fallen into safety nets, such as materials, scrap, equipment, and tools, shall be removed as soon as possible and at least before the next work shift.

Where conventional fall restraint and fall arrest methods cannot be utilized (or utilized safely), the following non-conventional methods can be utilized

A written work plan shall be developed when a project or task possesses a fall exposure whereby these systems are utilized. A sample written plan format can be found in 29 CFR 1926 Subpart M Appendix E.

A Competent Person will develop and implement a written Fall Protection Work Plan including each area of the work place where the employees are assigned and where fall hazards of 6 feet or more will exist. The Risk Assessment for this project/task should be reviewed for this document.

The written Fall Protection Work Plan shall include:

- Identification of fall hazards in the work area
- Describe the non-conventional method (or in combination with conventional method) of fall protection to be provided
- Describe the correct procedures for the assembly, maintenance, inspection, and disassembly of any fall protection system to be used
- Describe the correct procedures for the handling, storage, and securing of tools and materials
- Describe the method of providing overhead protection for workers who may be in or pass through the area below the work site
- Describe the method for prompt, safe removal of injured workers
- Describe the method for destruction of personal fall arrest system equipment subjected to the forces of any fall
- Be available at all times on the jobsite

Controlled Access Zone System

Controlled access zone systems shall be set up as follows:

- Zone shall be established no closer than six (6) feet or further than twenty-five (25) feet from any leading edge
- Control line shall extend parallel along the entire length of the unprotected or leading edge
- Only trained employees are allowed in the Zone
- The Zone shall have signage marking it as a 'Controlled Access Zone'

Warning Line System (pitches of ≤4:12 and flat surfaces only)

Warning line systems consist of ropes, wires, or chains, and supporting stanchions and are set up as follows:

- Flagged at not more than 6-foot intervals with high-visibility material
- Rigged and supported so that the lowest point including sag is no less than 34 inches from the walking/working surface and its highest point is no more than 39 inches from the walking/working surface
- Stanchions, after being rigged with warning lines, will be capable of resisting, without tipping over, a force of at least 16 pounds applied horizontally against the stanchion, 30 inches above the walking/working surface, perpendicular to the warning line and in the direction of the floor, roof, or platform edge
- The rope, wire, or chain will have a minimum tensile strength of 500 pounds, and after being attached to the stanchions, shall support without breaking the load applied to the stanchions as prescribed above
- Line will be attached to each stanchion in such a way that pulling on one section of the line between stanchions will not result in slack being taken up in the adjacent section before the stanchion tips over
- Warning lines will be erected around all sides of roof work areas. When mechanical equipment is being used, the warning line will be erected not less than 6 feet from the roof edge parallel to the direction of mechanical equipment operation, and not less than 10 feet from the roof edge perpendicular to the direction of mechanical equipment operation

When mechanical equipment is not being used, the warning line shall be erected not less than 6 feet from the roof edge.

The warning line system shall be used in conjuction with one of the following:

- safety monitoring system (most common); or
- (personal) fall arrest system; or
- safety net system; or
- guardrails

Safety Monitoring System

A competent person will appoint the 'safety monitor' and will ensure that the safety monitor:

- Is competent in the recognition of fall hazards
- Is capable of warning workers of fall hazard dangers and in detecting unsafe work practices
- Is operating on the same walking/working surfaces of the employees and can see them
- Is close enough to work operations to communicate orally with the employees and has no other duties but the monitoring function
- Has the authority to stop work

Only employees engaged in roof/surface work and the safety monitor shall be allowed in an area where an employee is being protected by a safety monitoring system.

Specific Fall Hazard Procedures

Aerial Personnel Lifts

Employees utilizing aerial personnel lifts (e.g. scissor lifts, genie lifts, cherry-pickers, boom-lifts, etc.) shall use a restraint/positioning system or (personal) fall arrest system, even though a guardrail system is in place. Refer to Aerial Personnel Lifts section (8) for specific information on operating this equipment.

Attachment points for these systems shall be capable of withstanding 5,000 pounds and shall be maintained in the floor of the lift or where designed by the manufacturer.

Rails of such lifts shall not to be used as attachment points unless designed for that purpose by the manufacturer.

Excavations

Employees who work at the edge of an excavation 6 feet or more deep will be protected from falling into the excavation by guardrail systems or covers. Refer to Excavation & Trenching section (16) for specific information.

Where walk-ways are provided to permit employees to cross over excavations, guardrails are required on the walkway if the fall would be 6 feet or more to the lower level.

Hoist Areas

Each employee in a hoist area will be protected from falling 6 feet or more by guardrail, restraint/positioning or (personal) fall arrest systems. Refer to Equipment section (15) for specific information on utilizing this equipment.

If guardrail systems (or chain gate or guardrail), or portions thereof, must be removed to facilitate hoisting operations, as during the landing of materials, and a worker shall lean through the access opening or out over the edge of the access opening to receive or guide equipment and materials, that employee shall be protected by a (personal) fall arrest system.

Falling Objects (additional protection from)

Except for scaffolding and aerial lifts, no materials or equipment shall be stored within 6 feet of working edges.

When **canopies** are used as protection from falling objects, canopies shall be strong enough to prevent collapse and to prevent penetration by any objects that may fall onto them.
When **toeboards** are used as protection from falling objects, they shall be erected along the edges of the overhead walking or working surface for a distance sufficient to protect persons working below. Toeboards will be capable of withstanding a force of at least 50 pounds of force applied in any downward or outward direction at any point along the toeboard. Toeboards will be a minimum of four (4) inches tall from their top edge to the level of the walking/working surface, have no more than one (1) inch clearance between its bottom and the surface.

Ladders (where work height (due to leaning out) exposure is equal to, or exceeds six foot and/or the maximum ladder height is within the distance to a leading edge)

If work is performed outside the rails of a ladder equal to, or exceeding 6' ; or if three-point contact on the ladder cannot be maintained, a (Personal) Fall Arrest Systems shall be utilized if anchorage points are available.

If anchorage points are not available or other traditional fall control systems are not feasible, a non-conventional system can be utilized (see 5.3 of this manual section).

Leading Edge Work

Employees working near a leading edge 6 feet or more above lower levels shall be protected by guardrail, safety net, restraint/positioning, or (personal) fall arrest systems. If these systems are not feasible the systems under 5.3 of this manual section can be utilized.

Roadway/Vehicular Passage Covers

Covers located in roadways and vehicular aisles shall be able to support at least twice the maximum axle load of the largest vehicle to which the cover might be subjected, and secured/marked as indicated in 5.2.2 of this manual section.

Roofs (work from or on)

Low-sloped (<4:12 pitch)

Employees engaged in roof activities on low-slope roofs with unprotected sides and edges feet or more above lower levels will be protected from falling by guardrail systems, safety net systems, (personal) fall arrest systems or a combination of a warning line system and guard-rail system, warning line system and safety net system, warning line system and (personal) fall arrest system, or warning line system and safety monitoring system.

Steep Roofs (>4:12 pitch)

Employees on a steep roof with unprotected sides and edges 6 feet or more above lower levels will be protected by either guardrail systems with toeboards, a safety net system, or a (personal) fall arrest systems.

Wall Openings

Employee working on, at, above, or near wall openings (including those with chutes attached) shall be protected from falling by the use of either a guardrail system, a safety net system, or a (personal) fall arrest system.

Equipment Inspection and Maintenance Procedures

Inspection, Replacement and Destruction

All equipment hereafter noted shall be visually inspected before each use, replaced immediately if any of the defective conditions are found, tagged ‘out of service’ and sent back to the Branch for destruction.

Body Harness Inspection

Beginning at one end, holding the body side of the harness toward you, grasp one area of the harness with your hands six to eight inches apart. Bend the strap in an inverted "U". Follow this procedure the entire length of the belt or harness. Watch for frayed edges, broken fibers, pulled stitches, cuts, burn marks or chemical damage. Special attention should be given to the attachment of buckles and D-rings to strap webbing. Inspect for frayed or broken strands. Broken webbing strands generally appear as tufts on the webbing surface.

Rivets should be tight and unmovable with fingers. Body-side rivet base and outside rivet burr should be flat against the material. Bent rivets will fail under stress. Especially note condition of D-ring rivets and D-ring metal wear pads (if applicable). Discolored, pitted, or cracked rivets indicate chemical corrosion.

The tongue or billet of bolts receives heavy wear from repeated buckling and unbuckling. Inspect for loose, distorted, or broken grommets. Harnesses using punched holes without grommets should be checked for torn or elongated holes causing slippage of the tongue buckle.

Hardware (Buckles, D-Rings, Snaps and Thimbles)

Buckle tongues should be free of distortion in shape and motion. They should overlap the buckle frame and move freely back and forth in their socket. Roller should turn freely on frame. Check for distortion or sharp edges.

Inspect the friction buckle for distortion. The outer bars and center bars must be straight. Pay special attention to corners and attachment points of the center bar.

Inspect the sliding bar buckle frame and sliding bar for cracks, distortion, or sharp edges. The sliding bar should move freely. Knurled edge will slip if worn smooth. Pay special attention to corners and ends of sliding bar.

Inspect the forged steel D-ring for cracks or other defects. Inspect the assembly of the D-ring to the body pad or D-saddle. If the D-ring can be moved vertically independent of the body pad or D-saddle, the harness should be replaced. Check D-Rings and D-Ring metal wear pad (if any) for distortion, cracks, breaks, and rough or sharp edges. The D-Ring bar should be at a 90 degree angle with the long axis of the belt and should pivot freely.

Inspect closely for hook and eye distortions, cracks, corrosion, or pitted surfaces. The keeper (latch) should seal into the nose without binding and should not be distorted or obstructed. The keeper spring should exert sufficient force to firmly close the keeper.

The thimble must be unmovable in the eyes of the splice, and the splice should have no loose or cut strands. The edges must be free of sharp edges, distortion, or cracks.

Lanyard (shock-absorbing)

Begin at one end and work to the opposite end. Slowly rotate the lanyard so the entire circumference is checked. Factory spliced ends require particular attention.

Lanyard (Webbing) Retractable

Bend the webbing over a non-lacerating edge, observe each side of the webbed lanyard. This will reveal any cuts or breaks. Swelling, discoloration, cracks, and charring are obvious signs of chemical or heat damage. Closely observe for any breaks in the stitching.

Rope

Rotation of the rope lanyard while inspecting from end to end will bring to light any fuzzy, worn, broken, or cut fibers. Areas weakened by extreme loads will appear as noticeable change in original diameter. The rope diameter should be uniform throughout, following a short break-in period. Strands should be separated and inspected since the rope may wear on the inside if grit or moisture becomes embedded.

Storage/Cleaning

Storage areas shall be maintained as clean, dry and free of exposure to fumes or corrosive elements.

Cleaning methods established by the manufacturer shall be followed for all components. Generally, the following applies for body harnesses:

- Wipe off surface dirt with a sponge dampened in plain water. Squeeze the sponge dry. Dip the sponge in a mild solution of water and commercial soap or detergent. Work up a thick lather with a vigorous back and forth motion
- Wipe the belt dry with a clean cloth. Hang freely to dry but away from excessive heat
- Bolts and other equipment should dry thoroughly without close exposure to heat, steam, or long periods of sunlight
- Mildly dirty cotton may be cleaned normally. For heavy dirt or grease, soak belts in a solution of one tablespoon of grease cutter to one gallon of water. DO NOT USE A STRONGER SOLUTION. After soaking, rinse again, then hang to dry
- Fall protection, which is not in the original package, shall be stored in a clean, dry area

Post-Fall or Near-Miss Incidents

Fall incidents and near-misses shall be thoroughly investigated to determine root causes and facilitate corrective measures to prevent reoccurences.

Employees involved in a fall equal to, or greater then 6’ shall be required to receive an immediate medical evaluation.

All components of a (personal) fall arrest system involved in any fall with a fall distance of over six feet shall be immediately and completely replaced. Such equipment shall be tagged ‘out of service’ and sent back to the Branch for destruction.

Fatigue Management

Purpose

To ensure PNT Consulting LLC employees recognize to effect of fatigue as related to safely being able to perform work and to establish guidelines for work hours and equipment to reduce fatigue in our business and at our client locations.

Scope

This program applies to all Company projects and operations.

Policy

The guiding principles of fatigue management shall be incorporated into the normal management functions of the business and include the following:

- Employees must be in a fit state to undertake work
- Employees must be fit to complete work
- Employees must take minimum periods of rest to safely perform their work

These principles will be managed through:

- The appropriate planning of work tasks, including driving, vehicle and equipment maintenance, loading and unloading and other job related duties and processes
- Providing appropriate equipment to help reduce stress and fatigue
- Regular medical checkups and monitoring of health issues as required by legislation
- The provision of appropriate sleeping accommodations where required
- Ongoing training and awareness of employee health and fatigue issues

Key Responsibilities

1. **Managers**
    a. Management accepts responsibility for the implementation of this fatigue management policy.

2. **Supervisors**
    a. Responsible for the implementation and maintenance of this program for their site and ensuring all assets are made available for compliance with the program.

2. **Employees**
    a. Employees must present in a fit state free from alcohol and drugs;
    b. Employees must not chronically use over-the-counter or prescription drugs to increase mental alertness.
    c. Employees are prohibited from taking any substance known to increase fatigue in that employee, including fatigue that sets in after the effects of the drug wear off.

d. Workers shall report tiredness/fatigue to supervision and supervisors shall take appropriate action to assist the worker.

e. Employees must report fatigue/tiredness and lack of mental acuity to supervision. Supervision must take appropriate actions to prevent loss.
f. Employees need to be rested prior to starting work.
g. Employees need to monitor their own performance and take regular periods of rest to avoid continuing work when tired.

Work Hour Limitations

PNT Consulting LLC has set the following work hour limitations and will control job rotation schedules to control fatigue, allow for sufficient sleep and to increase mental fitness.

1. Every Employee shall have necessary work breaks in order to avoid fatigue. These scheduled breaks will apply to both driving and on site hours. The following shall be a minimum:
   15 Minutes each 2.5 hours
   30 Minutes after 5 Hours
   30 Minutes after 10 Hours

2. No Workers shall work more than:

   12 hours per day
   24 Days Continuous

3. Unfamiliar or irregular work should be avoided.

Equipment and Evaluation

1. PNT Consulting LLC will provide equipment such as anti-fatigue mats for standing, lift assist devices for repetitive lifting and other ergonomic devices as deemed appropriate, chairs for workers to sit periodically and will provide periodic rest breaks for personnel.
2. PNT Consulting LLC will also periodically analyze and evaluate work tasks to control fatigue.

Training

1. PNT Consulting LLC is committed to ensuring that all employees are competent to perform their tasks including:
2. Fatigue management and health issues.
3. PNT Consulting LLC will provide initial and annual training on how to recognize fatigue, how to control fatigue through appropriate work and personal habits and reporting of fatigue to supervision.
4. A record of individual fatigues training and competency will be maintained.

Fire Protection

PURPOSE:

Fire Prevention/Protection Policy is intended to provide compliance with all related regulation and standard safe work practice. The purpose of the policy is to prevent fires and to provide guidelines for action in the event that a fire does occur.

Fire prevention program combines the following policies:

- PPE Policy
- Electrical Safety Policy
- Emergency Action Plan

These policies encompass methods used for incidence avoidance, incident response and specialized training required in the event of a fire.

Issues addressed in the above policies include, but are not limited to:

- Evacuation Procedure
- Extinguisher Training
- Basic Process Safety Training (if applicable)
- Hot Work Safety Training (if applicable)
- Confined Space Entry Safety Training (if applicable)
- Emergency Life Support Training
- Respiratory Protective Devices Training (if applicable)
- Assured Grounding Programs

POLICY:

Employees shall be informed of the proper actions to take in the event of a fire. This includes, but is not limited to; notification and evacuation procedures. It is STRESSED that at no time does the task of fighting fire supersede an employee's primary duties of:

- Ensuring their own personal safety and the safety of others.
- Reporting the incident to the proper authority and ensuring personnel accountability for yourself and all subordinates at the jobsite, in accordance with company and client policy.

PROCEDURE:

- All employees are responsible for good housekeeping practices to enhance fire prevention methods. Supervisors will be held accountable for the housekeeping of their job sites.
- If applicable, welding machine mufflers will be equipped with an approved spark arresting muffler.
- Only approved containers will be used during fueling operations. These shall be of the self-closing type.
- Flammable material shall be kept under the control. It shall be stored in compliance with applicable OSHA and client regulations. The quantity of flammable/combustible material shall be kept to a minimum on the job site.
- Welding, cutting and grinding sparks shall be contained.
- Hot work areas shall be kept wetted down, and a fire extinguisher and hose maintained on each jobsite.
- Oily rags shall be immediately disposed of in designated hazardous waste containers.
- No hot work is to be performed without a Hot Work Permit.
- All vehicle entry into process areas requires a permit or permission from the operator.
- Use bonding straps to discharge and prevent static charges during transfer of flammable liquids from one container to another.
- Report all spills or suspicious odors immediately.
- Fire extinguishers are to be kept in areas easily accessible to employees. Only approved fire extinguishers are to be used. They must have an inspection tag attached. Extinguishers are to be maintained in a fully charged, ready to operate state. Extinguishers are to be inspected before each use and documented annually. Training is provided to all employees who use or may use fire extinguishers.
- **NEVER** put yourself or others a risk while attempting to extinguish an incipient fire.
- **DO NOT USE** any fire hoses larger than 1-3/4", unless fully trained as an industrial firefighter.
- **NEVER** attempt to extinguish a pressurized-fuel fed fire.
- **DO NOT** direct a fire nozzle with a straight stream at any type of LPG fire. This action could extinguish the fire, producing an LPG vapor cloud capable of detonation.
- **DO NOT USE** fire monitors as the force can damage small equipment and certain high chrome alloy equipment cannot have water applied as cracking could occur.

- **DO NOT APPLY** water to any acid or caustic release as it can cause a violent reaction. Additionally, low concentration acids or caustics become extremely corrosive, causing an increasing leak condition.

IN THE EVENT OF A FIRE:

- Remain calm
- Only extinguish a fire when it is clearly within your abilities and the equipment available
- Know the location of the nearest alarm and how to activate the emergency system
- Know the evacuation routes and collection points
- If the fire cannot be extinguished, leave the area immediately and report to your evacuation area
- Await further instructions from the Incident Commander, or designated responsible personnel

BASIC FIRE SCIENCE:

- The combination of fuel, heat, oxygen equals the well-know fire triangle. To understand fire better, a fourth factor is added, a molecular chain reaction. This is due to the fact that fire results from a series of reactions in which complicated molecules "crack" into easily oxidized fragments. Disruption of this chain, along with the removal of fuel, heat or oxygen, is recognized as a method of fire extinguishment through the use of dry chemical extinguishers.

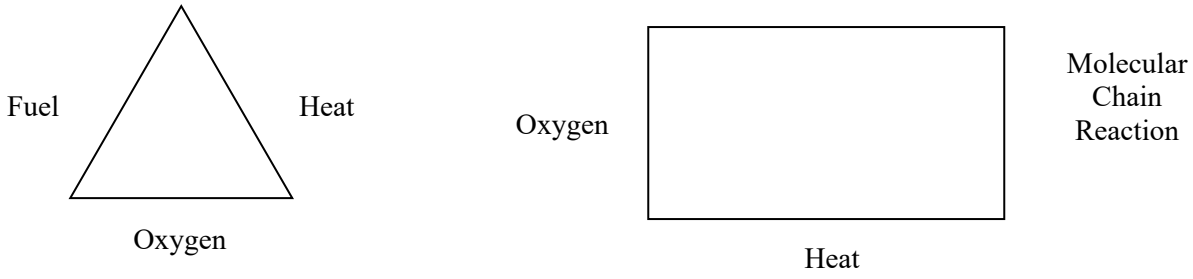

- **Heat Energy** - Can be produced by building up molecules (composition) or breaking apart (decomposition) by heat or a solution when materials are dissolved in a liquid, or by combustion.

- **Heat Transfer** - A law of physics states that heat tends to flow up from a hot substance or place to a cold substance or place. This is through conduction (transfer of heat through a medium such as metals) or through convection (transfer of heat with a medium-usually circulatory).
- **Fuels** - Those substances that will burn when heat is applied. The most common fuels are not pure elements such as carbon, but compounds and mixtures such as paper and wood.
- **Oxygen** - Makes up a major portion of the oceans and earth's crust and one-fifth of our atmosphere. Atmospheric oxygen is the major source of oxygen that supports combustion. Oxygen itself does not burn, however, without it, combustion is impossible. Normal burning is the combination of fuels with oxygen under the influence of heat.
- **Combustion** - A rapid oxidation or chemical combination accompanied by heat.
- **Oxidation** - The ability of materials to produce oxygen during a chemical reaction.
- **Spontaneous Combustion** - When oxidation is allowed to occur, enough oxygen is available, heat is produced, molecules become more energetic and combine with oxygen at an increasing rate, temperatures rise and visible heat (flames) are produced.

CLASSES OF FIRES:

- Class A - **Ordinary combustibles (wood/paper/textiles)**
- Class B - **Flammable liquids (gasoline/oils/grease)**
- Class C - **Live electric (wiring/generators/motors)**
- Class D - **Combustible metals (finely divided form/chips, turnings)**
- Class K – **Kitchen (oils/grease)**
-

TYPES OF FIRE EXTINGUISHERS:

- **Water** - extinguisher for ordinary combustible fires
- **Dry Chemical or CO2** - extinguisher for electrical equipment fires and for flammable liquid fires
- **Multipurpose Dry Chemical** - extinguisher for ordinary combustible fires, liquid fires, and electrical equipment fires
- **Foam** - extinguishing agent for hydrocarbon fires

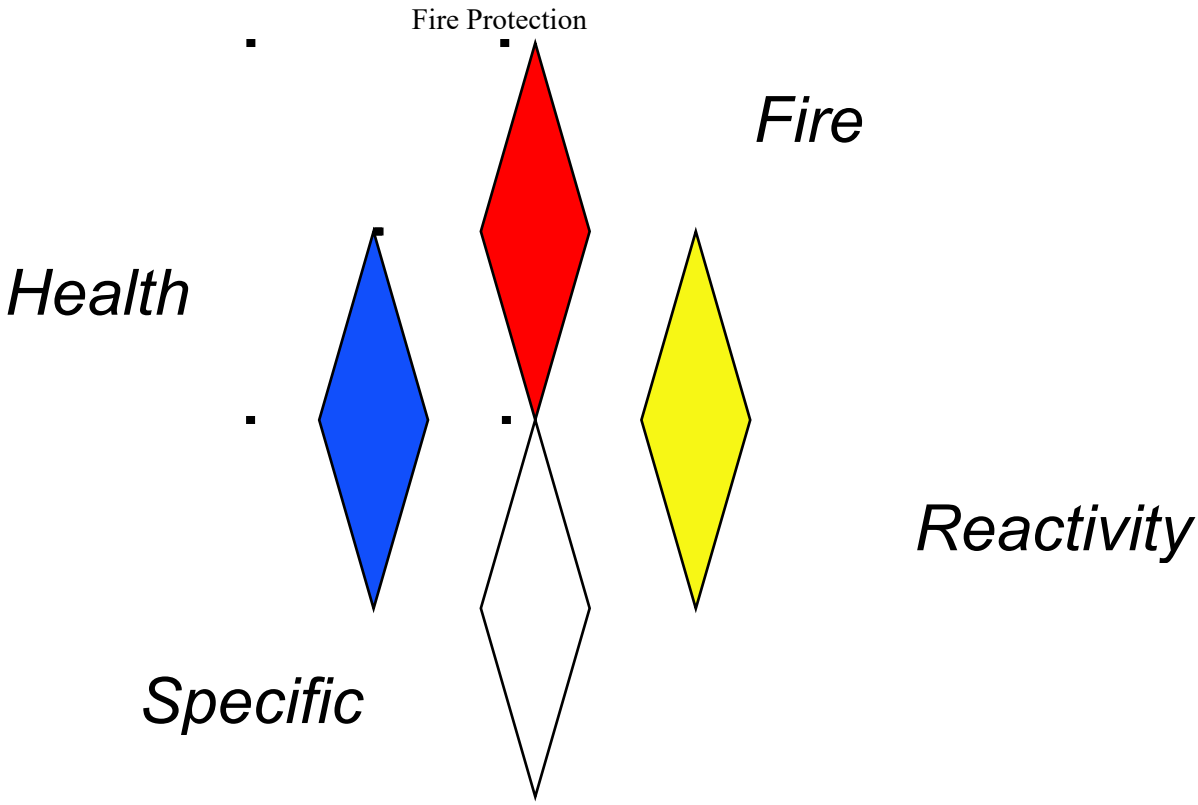

Scale ranges from 0 (lowest hazard) to 4 (highest hazard)

NFPA Diamond:

Fire Hazard (Red)	**Health Hazard (Blue)**	**Reactivity (Yellow)**	**Specific Hazards (White)**
Flash Points 4 below 73^0 F 3 below 100^0 F 2 from 100 - 200^0 F 1 above 200^0 F 0 will not burn	4 Deadly 3 Extreme Danger 2 Hazardous 1 Slight Hazard 0 Normal Material	4 may detonate 3 shock and heat, may detonate 2 violent chemical change 1 unstable if heated 0 stable	Oxidizer = OX Acid = ACID Corrosive = COR Use no water = W Radioactive =

Fire Protection

First Aid Program

PURPOSE

Employees must be provided with timely, appropriate first aid treatment. This program is the basis for meeting this expectation.

SCOPE

This program applies to all employees, visitors and contractors under company responsibility.

FIRST AID AND MEDICAL TREATMENT

COMPANY provides a First Aid Kit on the premises. It is there for employee's use in the treatment of minor scratches, burns, headaches, nausea, etc. All employees shall know the location of the First Aid Kit and shall notify their supervisor if they need to use the First Aid Kit.

If an employee has a work related injury or illnesses that requires professional medical assistance, they shall notify their supervisor and let him/her know before they receive this assistance. If they fail to notify their supervisor, they may be ineligible for Worker's Compensation, benefits to pay for doctor's bills, and/or lost wages.

COMPANY will ensure designated first aiders have a valid certificate in first aid training from an authorized organization, and shall be contacted to render first aid, as necessary.

The Chief Operations Officer shall inspect First Aid Kits before the kits are sent out to each job and on a weekly basis to insure that they are filled and complete

FIRST AID PROCEDURES AND INSTRUCTIONS

Minor First Aid Treatment

First aid kits are stored in the vehicles and the warehouse. If an employee sustains an injury or are involved in an accident requiring minor first aid treatment, they shall:

- Inform their supervisor.
- Administer first aid treatment to the injury or wound.
- If a first aid kit is used, indicate usage on the accident investigation report.
- Access to a first aid kit is not intended to be a substitute for medical attention.
- Provide details for the completion of the accident investigation report.

Non-Emergency Medical Treatment

For non-emergency work-related injuries requiring professional medical assistance, management must first authorize treatment. If an employee sustains an injury requiring treatment other than first aid, they shall:

- Inform their supervisor.
- Proceed to the posted medical facility. The supervisor will assist with transportation, if necessary.
- Provide details for the completion of the accident investigation report.

Employees shall use the nearest wash facility or eyewash station in the event an employee accidentally spills or splashes injurious chemicals or liquids on their clothing or body. The employee will also notify the Supervisor as soon as possible.

Emergency Medical Treatment

If an employee sustains a severe injury requiring emergency treatment:

- Call for help and seek assistance from a co-worker.
- Use the emergency telephone numbers and instructions posted next to the telephone in your work area to request assistance and transportation to the local hospital emergency room.
- Provide details for the completion of the accident investigation report.

First Aid Training

Each designated first aider will receive training and instructions from his or her supervisor on the following PNT Consulting LLC first aid procedures. All designated first aiders will have a valid certificate in first aid training from an authorized organization, and shall be contacted to render first aid.

WOUNDS:

Minor: Cuts, lacerations, abrasions, or punctures-

- Wash the wound using soap and water; rinse it well.
- Cover the wound using clean dressing.

Major: Large, deep and bleeding

- Stop the bleeding by pressing directly on the wound, using a bandage or cloth.
- Keep pressure on the wound until medical help arrives.

BROKEN BONES:

- Do not move the victim unless it is absolutely necessary.
- If the victim must be moved, "splint" the injured area. Use a board, cardboard, or rolled newspaper as a splint.

BURNS:

Thermal (Heat)

Rinse the burned area, without scrubbing it, and immerse it in cold water; do not use ice water.

Blot dry the area and cover it using sterile gauze or a clean cloth.

Chemical

Flush the exposed area with cool water immediately for 15 to 20 minutes.

EYE INJURY:

Small particles

Do not rub your eyes.

Use the corner of a soft clean cloth to draw particles out, or hold the eyelids open and flush the eyes continuously with water.

Large or stuck particles

If a particle is stuck in the eye, do not attempt to remove it.
Cover both eyes with bandage.

Chemical

Immediately irrigate the eyes and under the eyelids, with water, for 30 minutes.

NECK AND SPINE INJURY:

If the victim appears to have injured his or her neck or spine, or is unable to move his or her arm or leg, do not attempt to move the victim unless it is absolutely necessary.

HEAT EXHAUSTION:

Loosen the victim's tight clothing.
Give the victim "sips" of cool water.
Make the victim lie down in a cooler place with the feet raised.

CPR (Cardiopulmonary Resuscitation)

Alternative names: Rescue breathing, chest compressions - for adults; resuscitation, cardiopulmonary - for adults

Definition: CPR is a combination of rescue breathing (which provides oxygen to the victim's lungs) and chest compressions (which keep the victim's heart circulating oxygenated blood).

Considerations: CPR can be lifesaving, but it is best performed by those who have been trained in a CPR course. The procedures described here are not a substitute for CPR training.

Time is very important when dealing with an unconscious who is not breathing. Death can occur in 8 to 10 minutes and brain death begins after 4 to 6 minutes without oxygen.

Causes: Cardiopulmonary arrest is a combination of 2 life-threatening conditions: absence of

breathing and no heartbeat.

Symptoms:

- No Breathing
- No pulse
- Unconsciousness

DO NOT:

- DO NOT give chest compressions if there is a heartbeat; doing so may cause the heart to stop beating.
- DO NOT move the victim's head or neck to check for breathing if a spinal injury is suspected.

Call immediately for emergency medical assistance if:

- you are not alone, have one person call the local emergency number while another person begins CPR.
- you are alone, shout for help and administer CPR.

First Aid Program

FIRST AID:

1. Check for consciousness. Shake or tap the victim gently. See if the victim moves or makes a noise. Shout, "Are you OK?"

2. If there is no response, shout for help.

3. Position the victim on his or her back on a hard surface, keeping the back in a straight line, supporting the head and neck. Unfasten the victim's clothing if necessary to gain access to the victim's chest.
4. Kneel next to the victim's chin. Tilt the head back and lift the jaw forward to move the tongue away from the windpipe. If a spinal injury suspected, pull the jaw forward without moving the head or neck. Don't let the victim's mouth close.

5. Place your ear close to the victim's mouth and watch for chest movement. For 5 seconds, look, listen, and feel for breathing.

6. If the victim is not breathing, begin rescue breathing. Maintain the head position, close the victim's nostrils by pinching them with your thumb and index finger, and cover the victim's mouth tightly with your mouth. Give 2 slow, full breaths, with a pause in between.

7. If the chest does not rise, reposition the head and give 2 more breaths. If the chest still doesn't rise, the victim's airway is blocked. Follow instructions for chocking

Chocking Symptoms:

- unconscious
- lack of breathing
- inability to move air into the lungs with mouth-to-mouth resuscitation

DO NOT:

- DO NOT try to grasp an object that is lodged in the victim's throat. This might push it farther down the airway. If the object is visible in the mouth, it may be removed.
- DO NOT begin the chest compressions of CPR (if heartbeat has stopped) until the airway is cleared.

FIRST AID:
1. Roll the victim onto their back on a hard surface, keeping their back in a straight line, firmly supporting their head and neck. Expose the victim's chest.

2. Open the victim's mouth with your thumb and index finger, placing your thumb over his tongue and your index finger under his chin. If the object is visible and loose, remove it.

3. Lift the victim's chin while tilting the head back to move the tongue away from the windpipe. If a spinal injuyr is suspected, pull the jaw forward without moving the head or neck. Don't let the mouth close.

4. If the victim is not breathing, begin rescue breathing. Maintain the head position, close the victim's nostrils by pinching them with your thumb and index finger, and cover the victim's mouth tightly with your mouth. Give 2 slow, full breaths, with a pause in between.

5. If the victim's chest does not rise, reposition the head and give 2 more breaths.

6. If the victim's chest still doesn't rise, begin abdominal thrusts, as follows. Kneel at the victim's feet or astride the thighs (or to the side if the victim is obese or pregnant). Place the heel of your hand in the middle of the abdomen just above the navel, well below the tip of their breastbone. (If the victim is obese or pregnant, place the heel of your hand in the middle of the victim's breastbone. Do not place your hand on the ribs or on the tip of the breastbone.) Place your other hand on top of the first hand.

7. Give 6 to 10 quick thrusts compressing the victim's chest about 2 inches, pressing your hands inward and upward. Do not press to either side. Each thrust is a separate attempt to clear the victim's airway by forcing air out through the windpipe.

8. Open the victim's mouth with your thumb and index finger. If the object is visible and loose, remove it. Observe the victim's breathing. If the infant stops breathing, begin CPR.

9. If the object is not dislodged, give 2 breaths, 6 to 10 abdominal thrusts, and then check for the object. Repeat this sequence until the object is dislodged or help arrives.

8. If the victim's chest does rise, place 2 fingers on the victim's Adam's apple. Slide your fingers into the groove between the Adam's apple and the muscle on the side of their neck to feel for a pulse for 5 to 10 seconds.

9. If the victim has a pulse, give 1 breath every 5 seconds. Check the pulse after every 12 breaths.

10. Be sure the local emergency number has been called. Have someone else make the call if possible. Continue giving breaths and checking the pulse.

11. If the victim has no pulse, begin chest compressions. Maintain the head position and place the heel of your hand 2 finger-widths above the lowest notch of the victim's breastbone (where the lower edge of the ribcage meets in the middle). Place the heel of your other hand directly over the heel of the first hand. Interlock your fingers; don't let them touch the victim's chest. Lock your elbows straight. Lean your shoulders over your hands, and firmly press down about 2 inches into the victim's chest. Repeat the compressions continually. Give the compressions in a smooth, rhythmic manner, keeping your hands on the victim's chest. Don't rock back and forth - push straight down. Don't pause between compressions.

12. Give the victim continuous chest compressions. Count aloud as you pump in a regular rhythm. You should pump at a rate of about 80 to 100 times a minute. Count 1 and 2 and 3 and 4 and...15 and (breathe, breathe). <to the to the rhythm of “Staying Alive” song by the Bee Gees>.

13. Recheck the victim's pulse for 5 to 10 seconds.

14. Repeat steps 12 and 13 until the victim's pulse resumes or help arrives. If the pulse resumes, go to step 9.

15. Once pulse and respiration resume, roll the person onto his side taking care to move the body as a whole

unit. This is called the recovery position, but it should not be used if you suspect there might be a neck or spinal injury. Stay by the person until help arrives.

Prevention:

Be prepared and use good judgment.

Fit For Duty

Overview

PNT Consulting LLC is committed to providing a safe working environment and to protect the health and safety of employees, staff, visitors and **PNT Consulting LLC** property. This policy provides a mechanism for identifying and intervening when individuals who could pose a threat to the safety of others and property. Required drug and alcohol screening of employees in designated positions is addressed in **PNT Consulting LLC** company policy. Post offer / pre-hire screening of job candidates for positions related to **PNT Consulting LLC** services must comply with all **PNT Consulting LLC** Health and Safety Codes.

Definitions

a. Fitness for duty: physical and mental health status that facilitates the performance of essential job duties in an effective manner and protects the health and safety of oneself, others and property.

b. Reliable report: self-disclosure or third-party opinion about an employee's possible lack of fitness for duty which is assessed as reasonable by the manager/supervisor considering such factors as the relationship of the reporter to the employee, the seriousness of the employee's condition, the possible motivation of the reporter and how the reporter learned the information.

c. Working hours: beginning with an employee's starting time and ending with the employee's quitting time as well as any time an employee is on-call. All work activities are included whether they occur on or outside **PNT Consulting LLC** properties.

d. Medical evaluation: An examination performed by a designated health professional, including but not limited to a health history, physical and/or psychological examination and any medically indicated diagnostic studies. The cost is paid by the employer.

e. Medical certification: a document from a medically appropriate, licensed provider attesting to an employee's fitness for duty following an extended medical absence. Allowable costs to obtain the certification are paid by Workers Compensation for work related absences, and by the employee and the employee's health insurance for absences which are not work-related.

Employee responsibilities

a. Reporting to work, fit for duty.

b. Notifying the manager/supervisor when not fit for duty.

c. Notifying the manager/supervisor when observing a co-worker who may not be fit for duty (in cases where the possibly impaired individual is the employee's manager, the employee should make the notification to the next higher level manager or the Director of Human Resources/Payroll).

d. Cooperating with a manager/supervisor's directive, and, or, referral for a medical evaluation.

Manager/supervisor responsibilities

a. Observing the attendance, performance and behavior of employees they supervise.

b. Interviewing an employee who appears to the manager/supervisor, (or third-party report) unfit for duty and referring an employee for a medical evaluation when appropriate.

c. Recording the reasons/observations, that triggered a fitness for duty medical evaluation referral.

d. Utilizing this policy in a fair and consistent manner, respecting the employee's privacy, and the confidentiality of medical information.

Procedures

a. Employee plans to return from work after an extended medical absence.

1. Manager/supervisor receives medical certification from employee prior to his/her return to work, with suggested accommodations, if applicable.

2. Manager/supervisor determines whether or not employee can perform essential functions of the job with or without accommodation, accepting suggested accommodations or developing alternative accommodations.

3. Manager/supervisor provides and employee utilizes accommodations

b. A triggering event occurs when a manager/supervisor observes or receives a reliable report of an employee's possible lack of fitness for duty. Observations may include, but are not limited to an employee's self-reports, manual dexterity, coordination, alertness, speech, vision acuity, concentration, response to criticism, interactions with co-workers and supervisors, suicidal or

threatening statements, change in personal hygiene, presence of condition likely to lead to food borne disease transmission, memory and/or odor of alcohol or marijuana.

1. Manager/supervisor interviews employee, when possible.

2. Manager/supervisor assesses magnitude of safety risk. Managers/supervisors are encouraged to contact Human Resources/Payroll for assistance.

A. No risk: keep notes of event

B. Minor risk: encourage employee to use Employee Assistance Program (see **PNT Consulting LLC** company policy) or seek medical treatment; document event

C. Significant risk:

I. Contact local Police if appropriate

II. Place employee on paid leave of absence (sick leave or paid administrative leave, depending on situation)

III. Arrange for employee's safe transportation home if situation warrants

IV. Refer employee to Employee Assistance Program or for medical evaluation

V. Implement discipline, if appropriate

D. Severe risk:

I. Contact local Police

II. Place employee on paid leave of absence

III. Arrange for employee's safe transportation home

IV. Implement appropriate discipline

Outcomes

Fit For Duty

a. Employees voluntarily seeking assistance for physical (including controlled substance, drug and alcohol abuse/addictions), mental, and/or emotional problems before their work performance or attendance is adversely affected will not have their employment status jeopardized for seeking assistance.

b. Employees cooperating in a medical evaluation and in compliance with recommendations for medical, psychological and/or chemical dependence treatment may be returned to the job provided appropriate discipline, if warranted, has taken place.

c. Employees posing a severe risk may be subject to discipline up to and including termination of employment.

Employee Signature_____ Date_____

Printed Name _____

Supervisor/Manager Signature _____

Date _____

Appendix A

Powered Industrial Truck (Forklift) Operator Training Guide

OSHA Requirements:

This program is designed to meet the training requirements in accordance with OSHA 1910.178 Powered Industrial Trucks by covering the following:

- ***Selection of the operator:*** Consider physical qualifications and aptitude.

- ***Safety rules:*** Emphasis on safety, equipment, fellow employees.

- ***Fundamentals of the truck:*** Load limits, center of gravity, stability.

- ***Introduction to the equipment:*** Locations and function of the controls, proper use and dangers of misuse.

- ***Supervised practice:*** Observed operation on a course designed to simulate the type of work to be done. Example: Loading box cars, stacking pallets, loading trailers.

- ***Oral, written and operational performance tests:*** Documentation of these results following completion of the course.

- ***Refresher Training:*** Condensed version of initial training conducted at least every three years, may include: On the job observations, retaking of the written tests, supervised practice on the simulation course.

LIFT TRUCK OPERATORS PRE-TRAINING GUIDE:

About one week prior to the training sessions, the trainees are to be given copies of the Forklift Program and a copy of any other available resource materials to refresh their awareness (i.e. forklift Manufacturer manual, etc.).

Schedule trainees for sessions so it does not interfere with production.

Are the lift trucks standard or do they have special equipment. If special equipment applies, a thorough description of the equipment should be provided.

Materials needed for the training include:

- Training video on safe forklift truck operation.

- XXXX Company safe operating rules on forklift operations.

- Copies of the written test and answer sheets.

- Designated area to perform the driving simulation or obstacle course (Applicable for new operators).

- Cones and pallets to simulate loads, aisles, etc.

FORK LIFT TRUCK OPERATORS TRAINING

INSTRUCTORS GUIDE:

Why do we training lift truck operators?

Explain to the class why it's important and that is the reason why we're all here.

- **OSHA requirement.**

- **Reduction on damage to products, equipment, plant facilities and people.**

Explain to the class the seven requirements in OSHA 1910.178

1. **Selection of the operator:** Consider physical qualifications and aptitude.

2. **Safety rules:** Emphasis on safety, equipment, fellow employees.

3. **Fundamentals of the truck:** Load limits, center of gravity, stability.

4. **Introduction to the equipment:** Locations and function of the controls, proper use and dangersof misuse.

5. **Supervised practice:** Observed operation on a course designed to simulate the type of work to be done. Example: Loading box cars, stacking pallets, loading trailers.

6. **Oral, written and operational performance tests:** Documentation of these results following completion of the course.

7. **Refresher course:** Condensed version of initial training conducted at least every three years, may include: On the job observations, a refresher written test, or supervised practice on the simulation course with documented results.

Tell the class that we will review each of the seven subjects. Be sure to encourage participation.

1. **Selection of the operator:** Consider physical qualifications and aptitude.

Tell the class that they could not be here as a driver if the physical requirements could not be met even with modifications to the equipment to compensate for a recognized disability.

2. **Safety rules:** Emphasis on safety, equipment, fellow employees.

Location specific rules should be reviewed along with General Safe Operating Rules. Ask the class if they have any questions regarding the safety rules. Pick out several rules that are particularly important at your worksite.

3. Fundamentals of the truck: Load limits, center of gravity, stability.

Load limits for the specific trucks to be operated should be obtained from the forklift data plate and reviewed. Capacities are generally based on a "standard" 24" load center and expressed as _____lbs. @ 24" unless specifically noted. (i.e. – 36", 48", etc.) The load center is the distance from the mast to the center of the load on the forks. 24" is considered "standard" reflecting the dimensions of a standard pallet (48" x 48").

Center of Gravity: The point within a lift truck where there is equal weight all around it designated as C+G.

Fulcrum Point: The point on the truck between which balances the weight of the truck and the weight of the load being carried.

The front wheels of a lift truck serve as the Fulcrum Point between the weight of the truck and the weight of the load being carried. If the weight of the load is equal to the weight of the truck, with equal distances between the centers of gravity, it is possible to "seesaw" a lift truck on its front wheels.

Stability Triangle: The triangle formed between the three support points (A, B, & C) on the underside of the truck.

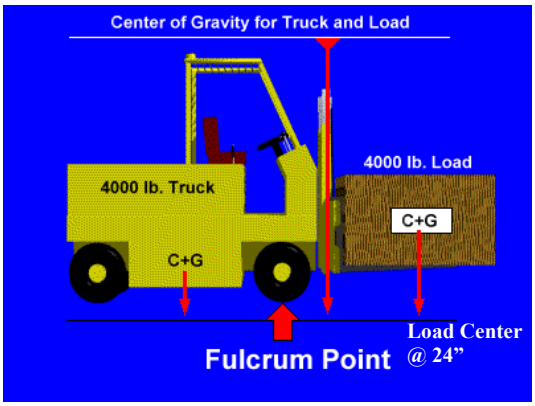

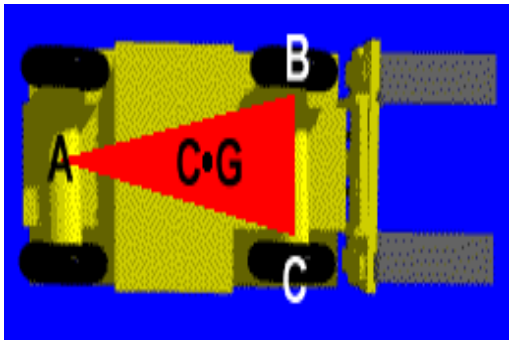

If you were to raise a lift truck up and look at its underside, you would see that the support points for the truck are located at points A, B, and C. The triangle formed between points A, B, and C is called the Stability Triangle. The lift truck will not tip over as long as the center of gravity remains inside the triangle. (The center of gravity is the point within a lift truck where there is equal weight all around it.)

However, if the center of gravity shifts outside the stability triangle, the lift truck will tip over. The center of gravity within a lift truck can be moved by:

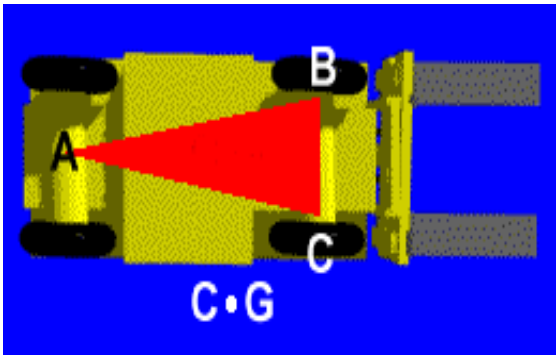

- *Traveling with an unequally distributed and/or elevated load;*
- *Trying to carry too heavy a load;*
- *Trying to turn the lift truck while it is moving too fast;*
- *Operating the lift truck on a hill or incline;*
- *Starting or stopping too fast;*
- *The jerky operation of the hydraulic system*

If we rearrange the load so that the load's center of gravity is farther away from the fulcrum point, this will cause the center of gravity for both the truck and the load to shift beyond the front wheels of the truck, and the truck will tip forward.

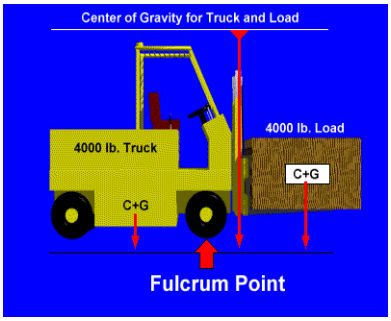

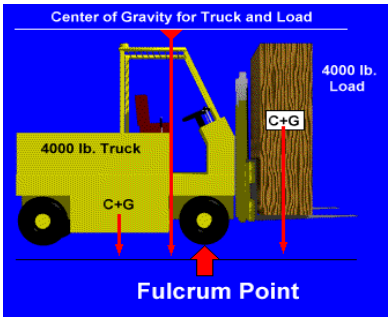

If, on the other hand, we arrange the load so that the load's center of gravity is closer to the fulcrum point, this will cause the center of gravity for both the truck and the load to shift behind the front wheels of the truck. With this arrangement, there is no danger of the truck tipping forward.

***<u>Show forklift truck training video.</u>* Discuss key film segments.**

Procedure for inspecting the truck:

A. Check all fluids.

B. Check brakes / steering.

C. Check lifting apparatus (mast, lifting chains & fork).

D. Check general truck conditions.

E. Document.

Procedure when parking the truck:

A. Level surface.

B. Set brake.

C. Tilt mast forward.

D. Lower forks to floor.

E. Turn off engine.

Procedure when making a lift:

A. Position forks 3” to 4" off the floor with slight back tilt of the mast.

B. Align truck and move forward slowly.

C. Stop 12" from load to be lifted.

D. Raise forks to desired height in line with load to be lifted, and level forks by adjusting the tilt of the mast.

E. Move forward slowly until the pallet touches the base of the forks.

F. Raise pallet 6" to 7" from the stack or floor.

G. Check behind and to the left and right, then back slowly until the load clears the stack. *Watch for instability in the load.*

H. Stop the truck and lower the load to about 4" above the floor and tilt the mast back slightly.

I. Check behind and to the left and right, then back slowly in the desired direction.

Procedure on ramps:

A. Drive forward up a ramp, backwards down the ramp.

B. Apply more back tilt to the mast.

C. Raise forks to clear the incline.

D. Never turn on a ramp.

E. After clearing the ramp return the fork height and mast tilt to their normal position.

Procedure when loading a truck:

A. Secure the dock board.

B. Chock the wheels of the trailer.

C. Check the floor of the truck trailer to be sure it is not rotten.

D. Check overhead clearance when entering the trailer.

4. Introduction to the equipment: Locations and function of the controls, proper use and dangers of misuse, capacity data plate information.

Ask the class if they know how to drive a lift truck and document their prior experience. Review the information pertinent to the specific vehicle the operators will be utilizing. Complete this section in detail only if you are training novice operators or those who may not be familiar with

your equipment. Provide only a brief summary of the main points including capacities, hazards, etc. for experienced operators.

5. **Supervised practice:** Observed operation on a course designed to simulate the type of work to be done. Example: Loading racks, stacking pallets, loading trailers.

You may omit this section for experience operators. Novice operators should have the opportunity to practice on the simulation course before performing the operational test. A Performance Test Score Sheet should be used to document the observation and to score the operator.

6. **Oral, written and operational performance tests:** Documentation of these results following completion of the course.

You may pass out copies of the written test. There are 20 true / false and 5 fill in the blank questions for the exam. Scoring should include each question being worth 5 points each for the exam.

Grading of both exams should be based on the following scale:

GRADING:	SCORE:
Excellent	**90+**
Good	**80 - 90**
Passing	**70 - 80**
Needs additional training	**Below 70**

*Also pass out copies of the **practice driving score sheet (if applicable)**. Use this sheet to score how well each operator performs operational test.*

7. **Refresher Training:** At least every three years, a condensed versions of initial training, may include: On the job documented observations, taking the annual refresher written test, or supervised practice on a simulation course with documented results.

PERFORMANCE TEST COURSE LAYOUT

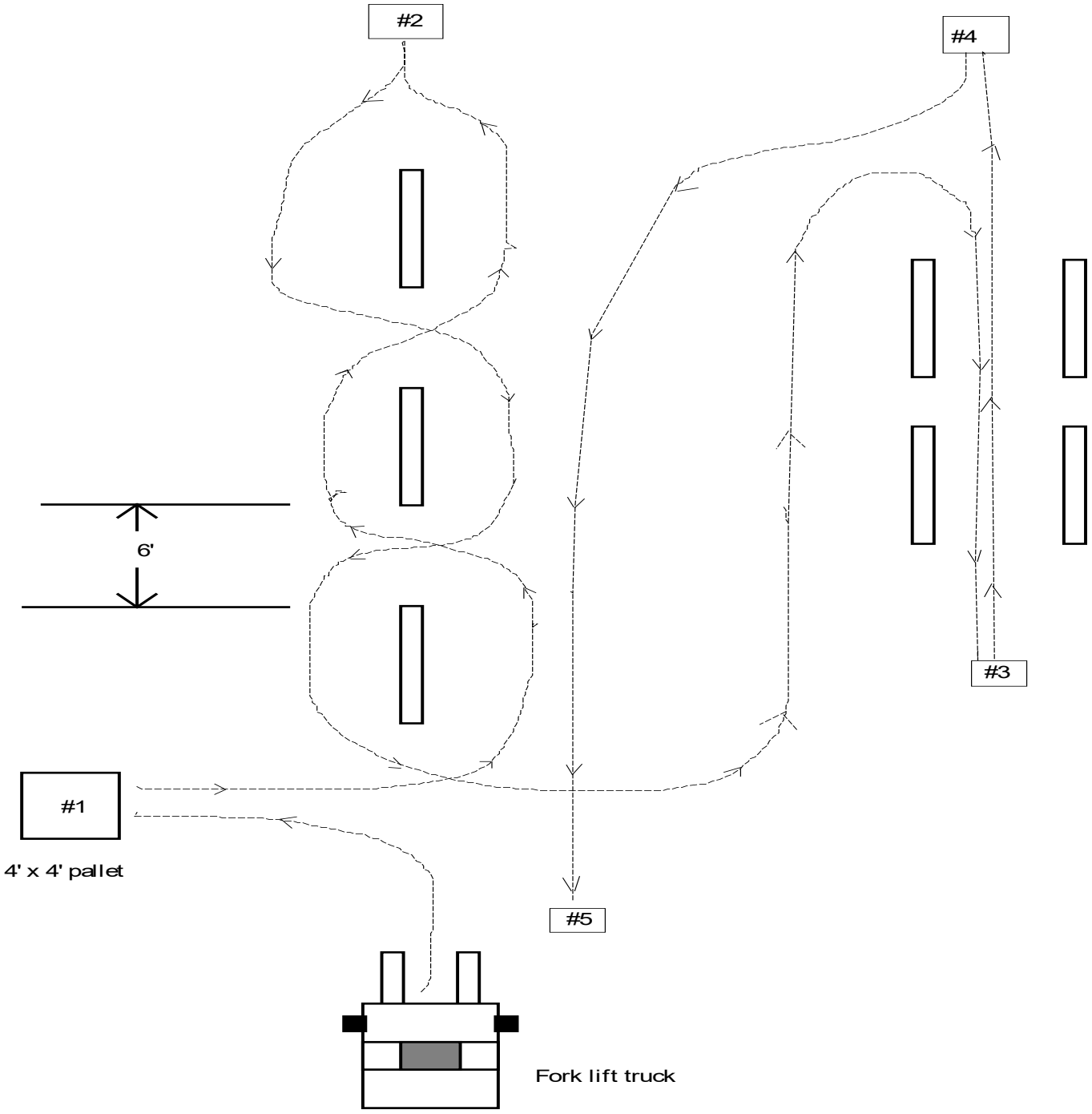

PERFORMANCE TEST SKILLS TO EVALUATE

1. Complete pre-inspection of industrial truck.

2. Drive forward and pickup pallet, drive forward zig-zaging through the course.

3. Stop and drive backwards through the course.

4. Turn around and drive backwards through the tight clearances.

5. Stop and deposit the pallet, drive backwards to station #5.

6. Stop the lift truck and dismount.

PERFORMANCE TESTING SCORE SHEET

Operators Name: _____

Date: _____

Type of maneuver:	**Deduct points for:**	**Points earned:**
1. ***PALLET PICKUP (20 points)***		
• **Pallet not straight on forks**	**1**	
• **Riding clutch or brake**	**3**	
• **Improper position of forks**	**3**	
• **Improper tilting of forks**	**3**	
• **Backing without looking**	**5**	
• **Missed approach**	**5**	_____
2. ***TRAVELING FORWARD WITH PALLET (20 points)***		
• **Barrier Contact**	**2**	
• **Barrier movement**	**3**	
• **Barrier knockdown**	**7**	
• **Backing without looking**	**5**	
• **Riding clutch or brake**	**3**	_____
3. ***TRAVELING IN REVERSE WITH PALLET (20 points)***		
• **Barrier contact**	**2**	

- **Barrier movement** **3**
- **Barrier knockdown** **7**
- **Backing without looking** **5**
- **Riding clutch or brake** **3**

4. ***OFFSET PALLET DROP (20 points)***

- **Poor positioning** **5**
- **Missed approach** **5**
- **Backing without looking** **5**
- **Riding clutch or brake** **3**
- **Improper approach (** ***forks raised, tilted)*** **2**

5. ***DRIVER PERFORMANCE (20 Points)***

- **Driver attitude** **10**
- **Smoothness** **5**
- **Forks lowered to ground at dismount** **3**
- **Pre-inspection completed** **2**

TOTAL POINTS EARNED

GRADING:	SCORE:
Excellent	90 – 100
Good	80 – 90
Passing	70 – 80
Needs additional training	Below 70

NOTES / COMMENTS:

Operators signature: _____

Trainers signature: _____

FORKLIFT OPERATOR EXAM

NAME:_____

DATE:_____

I. True / False

	TRUE	FALSE
1. No truck can be safer then the person operating it. For this reason, only authorized persons are permitted to operate industrial trucks.	_____	_____
2. An operator should check the condition of his equipment as soon as he goes on duty. This should include checking the fuel level, oil level, brakes, steering, and the physical condition of the truck and it's components.	_____	_____
3. You should always operate a fork lift slowly and never make quick turns because a fork lift has a high center of gravity and a narrow wheel base.	_____	_____
4. The Stability Triangle states that the center of gravity of a fork truck is somewhere near the rear of the vehicle. The center of gravity shifts towards the forks when the load is raised.	_____	_____
5. If the forklift data plate notes a 5000 lbs. maximum capacity at a 24" load center, this means you can safely lift a load weighing 5000 lbs. if the load center is 24".	_____	_____

6. You should slow down at cross isles and intersections, sound the horn before proceeding. When vision is obstructed by doors, corners, and elevators, sound the horn.

7. It is not necessary to set the hand brake if parked on level ground.

8. If you feel sure there is no obstruction, it is not necessary to face in the direction in which you are driving.

9. If the forklift data plate notes a 5000 lbs. maximum capacity at a 24" load center, this means you can lift a 5000 lbs. load to the maximum height also noted on the data plate no matter what angle of the mast.

	TRUE	FALSE
10. An operator should not drive with wet or greasy hands.		
11. Do not attempt to enter a building through a partially opened door. The door shall be fully opened before proceeding.		
12. No passengers are allowed on fork trucks.		

13. When the forklift is loaded, you should go down a ramp in forward gear.

_____ _____

14. No one should be allowed to be lifted by the fork lift unless a properly secured and approved fork platform with railings is provided and the operator remains at the controls at all times.

_____ _____

15. When starting, the operator should race the engine and spin the wheels before proceeding.

_____ _____

16. Railroad tracks, speed bumps, or roadway transitions should never be crossed at an angle.

_____ _____

17. It is OK to stand under suspended loads.

_____ _____

18. If you tilt the mast forward with a load fully raised, the maximum lifting capacity of the fork lift is increased times 2.

_____ _____

19. Rest forks on the ground or floor and always set the parking brake when the fork truck is not in use.

_____ _____

20. In order to lift a heavy load, you may have someone stand on the back of the truck to act as a counter weight.

_____ _____

II. Fill In The Blank

21. Forklifts are designed to operate on the _____ principal which states that the front wheels act as the point or support on which the lever turns.

22. A fork truck operator must first _____ the fork truck before starting the engine.

23. When refueling, the forklift engine _____ be operating.

24. When dismounting, the forks should be_____.

25. The maximum capacity of the fork truck I operate at a 24” center point is _____ lbs.

FORKLIFT EXAM ANSWER SHEET:

1. T
2. T
3. T
4. T
5. T
6. T
7. F
8. F
9. F
10. T
11. T
12. T
13. F
14. T
15. F
16. T
17. F
18. F
19. T
20. F

Fill in the blanks:

21. Fulcrum
22. Inspect
23. Must Not
24. Lowered
25. _____Lbs.

Forklifts (Power Industrial Trucks)

OPERATOR'S PERMIT



FORKLIFT OPERATORS PERMIT

(Operators Name)

has completed the fork lift truck operators training program.
This permit is valid for 3 years from the date on this card.

(Supervisor) (Date)



FORKLIFT OPERATORS PERMIT

(Operators Name)

has completed the fork lift truck operators training program.
This permit is valid for 3 years from the date on this card.

(Supervisor) (Date)

Forklifts (Power Industrial Trucks)



FORKLIFT OPERATORS PERMIT

(Operators Name)

has completed the fork lift truck operators training program.
This permit is valid for 3 years from the date on this card.

(Supervisor) (Date)



FORKLIFT OPERATORS PERMIT

(Operators Name)

has completed the fork lift truck operators training program.
This permit is valid for 3 years from the date on this card.

(Supervisor) (Date)

.

Forklifts (Power Industrial Trucks)

Purpose

To define the procedures and standards that apply to the care, control, maintenance, inspection, and operation of forklifts (powered industrial trucks).

Forklifts (powered industrial trucks) shall be operated, maintained, and controlled in a safe manner.

This policy covers minimum performance standards applicable to all Company Associates employees and locations. Local practices requiring more detailed or stringent rules, or local, state or other federal requirements regarding this subject can and should be added as an addendum to this procedure as applicable.

Scope

Company Associates work sites, i.e., company offices, client job sites, etc. requiring the use of forklifts (powered industrial trucks).

Definitions

Forklift means a mobile, power-propelled truck used to carry, push, pull, lift, stack, or tier materials. Powered industrial trucks (forklifts) are also commonly known as pallet trucks, rider trucks, fork trucks, or lift trucks.

Requirements

Training

Only trained and authorized persons are permitted to operate a forklift or other Power Industrial Truck. The Branch Safety Officer or designee will administer the forklift operator certification program and maintain training records.

Training shall occur prior to employee operation of any forklift, and at least every three years thereafter unless observed performance by the operator dictates the need for more frequent retraining. Classroom and Practical Training in addition to Operator Evaluation are required. Each trainee, who satisfactorily completes the qualifications as outlined above, shall be issued a written document as evidence of being a Qualified Forklift Operator.

Each manufacturer or un-similar model of Power Industrial Truck shall require individual Practical Training and Operator Evaluation prior to receiving authorization to operate.

Inspection and Maintenance

Prior to placing a forklift truck into service, the truck operator shall inspect their vehicle and document this inspection.

Forklifts (Power Industrial Trucks)

It is the responsibility of the department manager to submit the inspection checklists to the Safety Officer on a weekly basis. The Branch Safety Officer shall keep the last 30 days of inspection checklists for each forklift on file for review.

Any noted condition that affects the safe operation of the lift truck shall be reported to the operator's supervisor for corrective action and shall keep the lift truck from being operated until the unsafe condition is corrected.

Forklifts that are defective, in need of repair or are unsafe shall be tagged "Danger - Do Not Operate" and taken out of service until restored to safe operating condition.

A maintenance log shall be maintained for each forklift to determine when required maintenance is due. Only qualified personnel shall perform maintenance and repair. Maintenance records for each forklift shall be kept on file by the assigned department manager.

General Safe Operating Rules

The following safe operating rules apply to Associates employees who operate a forklift. Violations of safe operating rules can and will result in retraining and/or disciplinary action.

1) Only employees trained as per the requirements of this manual section and authorized by the department manager shall be allowed to operate forklifts

2) Forklifts shall not be loaned or rented to others for use.

3) Stunt driving and horseplay shall not be permitted.

4) Forklifts shall be equipped with seat belts and utilized by the operator when in use.

5) Personnel are not permitted to ride on forklifts except in designated seats that are part of the equipment design.

6) Forklifts shall be equipped with a portable fire extinguisher.

7) Under travel conditions, the forklift shall be operated at a speed that will permit it to be brought to a stop in a safe manner.

8) Traffic regulations shall be observed, including authorized work site speed limits. A safe distance shall be maintained approximately three forklift lengths from the forklift truck ahead.

9) The driver shall be required to slow down and sound the horn at cross aisles and other areas where vision is obstructed. If the load being carried obstructs forward view, the driver shall be required to travel with the load trailing.

10) The driver shall be required to look in the direction of, and keep a clear view of the path of travel.

11) Forklifts shall have a functional horn and back-up alarm with a distinctive sound, loud enough to be heard clearly above background noises. There are other scenarios where a flashing yellow/amber light would be installed. An Addendum referencing any requirements of such lights shall be added to this manual section.

12) Copies of the manufacturer's operating instructions for each type of forklift shall be readily available for review by operators and supervisory personnel.

13) Lift trucks, stackers, etc., shall have the rated capacity clearly posted on the vehicle so as to be clearly visible to the operator. When the manufacturer provides auxiliary removable counterweights, corresponding alternate rated capacities also shall be clearly shown on the vehicle. These ratings shall not be exceeded.

14) No modifications or additions, which affect the capacity or safe operation of the equipment, shall be made without the manufacturer's written approval. If such modifications or changes are made, the capacity, operation, and maintenance instruction plates, tags, or decals shall be changed accordingly. In no case shall the original safety factor of the equipment be reduced.

15) Steering or spinner knobs shall not be attached to the steering wheel unless the steering mechanism is of a type that prevents road reactions from causing the steering hand wheel to spin. The steering knob shall be mounted within the periphery of the wheel.

16) Forklifts shall have the manufacturer's nameplate showing its weight with attachments, lifting capacity, lift height maximum and other pertinent data. Nameplates or markings shall be maintained in a legible condition and remain in place.

17) Railroad tracks shall be crossed diagonally wherever possible. Parking closer than 8 feet from the center of railroad tracks is prohibited.

18) Grades shall be ascended or descended slowly.

19) When ascending or descending grades in excess of 10 percent, loaded forklifts shall be driven with the load upgrade.

20) Unloaded forklifts should be operated on all grades with the load engaging means downgrade.

21) On grades, the load and load engaging means shall be tilted back if applicable and raised only as far as necessary tee clear the road surface.

22) No person shall be allowed to stand or pass under the elevated portion of any forklift, whether loaded or empty.

23) There shall be sufficient headroom under overhead installations, lights, pipes, sprinkler system, etc.

24) Arms or legs are prohibited from being placed between the uprights of the mast or outside the running lines of the forklift.

25) When a forklift is left unattended, load engaging means shall be fully lowered, controls shall be neutralized, power shall be shut off, and brakes set.

26) Wheels shall be blocked if parked on an incline.

27) A safe distance shall be maintained from the edge of ramps or platforms while on any elevated dock, or platform, or freight car. Forklifts shall not be used for opening or closing freight doors.

28) Brakes shall be set and wheel blocks shall be in place to prevent movement of trucks, trailers, or railroad cars while loading or unloading. Fixed jacks may be necessary to support a semi-trailer during loading or unloading when the trailer is not coupled to a tractor. Prior to forklift entry, the flooring and frames of trucks, trailers and railroad cars shall be checked for breaks and weakness before they are driven into and to determine if it will bare the intended weight of the forklift and intended load.

29) Dock board or bridge plates shall be properly secured before they are driven over. Dock board or bridge plates shall be driven over carefully and slowly and their rated capacity never exceeded. Portable dock boards shall be secured in position, by being anchored or equipped with devices that will prevent their slipping.

30) An overhead guard shall be used as protection against falling objects. It should be noted that an overhead guard is intended to offer protection from the impact of small packages, boxes, bagged material. etc. representative of the job application, but not to withstand the impact of a falling capacity load.

31) Additional counter weighting of forklifts shall not be allowed unless approved by the manufacturer.

32) Employees shall not jump off a forklift.

33) Forklift operators shall yield to pedestrians.

34) Loads carried shall be secured on the forks to prevent upset / overturn.

Gas Monitor Program

Purpose
To ensure proper use and accuracy of the gas monitors, which will be used on a job site where hazardous gases may exist.

Scope
This section applies to all employees and subcontractors who will be either using a personal gas monitor, or performing work on a job site where continuous air monitoring is required.

Definitions
Zero(fresh air) Calibration – This is done in a clean atmosphere of 20.9% oxygen and no detectable VOC, toxic, or combustible gases. It is used to set the zero point for each sensor.

Span Calibration – is the set of operations that establish, under specified conditions, the relationship between the values of quantities indicated by a measuring instrument and the corresponding values realized by given standards. Note: Refer to the gas bottle label for specific values.

Bump Testing – Ensures that all sensors are reading accurately according to the set values of the gas being applied. Note: Refer to the gas bottle label for specific values.

STEL – Short Term Exposure Limit

TWA – Time Weighted Average

LEL – Lower Explosive Limit

Zero Calibration
After the gas monitor is turned on in a safe, well ventilated, clean air environment, and is in operation mode, the oxygen sensor should read 20.9%. All other sensors should read 0. If this not the case, zero calibration should be performed. Refer to the manufacturer's reference guide for proper procedure.

Span Calibration
All monitors shall be calibrated every 30 days. Refer to the manufacturer's reference guide for proper calibration procedure.

Bump Testing
All monitors shall be bump tested daily or prior to each use. Refer to the manufacturer's reference guide for proper bump testing procedure.

Alarm Values
Peak, STEL, and TWA values shall be set to meet or exceed the OHS regulations for the specific gases that are being monitored. Alarm levels for LEL's shall not exceed 10%.
Alarm values shall meet site specific requirements that exceed OHS regulations.

Gas Monitor Program

.

Ground Fault Protection

PURPOSE:

The purpose of this policy is to specify procedures and guidelines to eliminate all injuries resulting from possible malfunctions, improper grounding and/or defective electrical tools.

GROUND FAULT PROTECTION

The company will use ground fault circuit interrupters or assured equipment grounding conductor program to protect employees on the job site. These requirements are in addition to any other requirements for equipment grounding conductors.

Ground-fault circuit interrupters (GFCI) - All 120 volt, single phase, 15 and 20 ampere Receptacle outlets on the job site, which are not part of the permanent wiring of the building or structure and which are in use by employees, shall have approved ground fault circuit interrupters for personnel protection. Receptacles on a two wire, single phase portable or vehicle mounted generator rated not more than 5kw, where the circuit conductors of the generator frame and all other grounded surfaces, need not be protected with ground fault circuit interrupters.

Assured equipment grounding conductor program - The company has established the following assured equipment grounding conductor program on the job site covering all cord sets, receptacles which are not part of the building or structure, and equipment connected by cord and plug which are available for use or used by employees. This program will comply with the following minimum requirements:

a) A written description of the program, including the specific procedures adopted by the employer, shall be available at the job site for inspection and copying by Assistant Secretary and any affected employee.

b) The manager and/or designated employee have been designate to implement the program as defined by OSHA 1926.304(f).

c) Each cord set, attachment cap, plug and receptacle of cord sets, and any equipment connected by cord and plug, except cord sets and receptacles which are fixed and not exposed to damage, shall be visually inspected before each day's use for external defects, such as deformed or missing pins or insulation damage, and for indications of possible internal damage.

Equipment found damaged or defective shall not be used until repaired. Damaged or defective items shall be tagged "DO NOT USE" and removed from service until repaired and tested.

d) The following tests shall be performed on all cord sets, receptacles which are not part of the permanent wiring of the building or structure, and cord and plug connected required to be grounded:
   (1) All equipment grounding conductors shall be tested for continuity and shall be electrically continuous.
   (2) Each receptacle and attachment cap or plug shall be tested for correct attachment of the equipment grounding conductor. The equipment grounding conductor shall be connected to its proper terminal.

e) All required test shall be performed:
   (1) Before first use;
   (2) Before equipment is returned to service following any repairs;
   (3) Before equipment is used after any incident which can be reasonably suspected to cause damage (for example, when the cord set has been run over; and
   (4) At intervals not to exceed 3 months, except that cord sets and receptacles which are fixed and not exposed to damage shall be tested at intervals not exceeding 6 months.

f) The company will not make available or permit the use by employees on any equipment which has not met the above requirements.

g) Tests performed as required will be recorded. This test record shall identify each receptacle, cord set, and cord and plug connected equipment that passed the test and shall indicate the late date it was tested or the interval for which it was tested. The equipment will be identified with a nonconducting tag or other means of identification. This record shall be kept by means of logs, color coding, (example – colored plastic tapewriter tape) or other effective means and shall be maintained until replace by a more current record. The record shall be made available on the job site for inspection by the Assistant Secretary and any affected employee.

h) The company will use a different color plastic tape for each quarterly inspection. Red 1st Quarter, Blue 2nd Quarter, Green 3rd Quarter, and Yellow 4th Quarter. A plastic tape writer will be used to identify each cord set by a number (SP01, 02, 03 etc.). A written record will be maintained on all cords sets and news sets as they are added. A Volt/OHM meter will be used to test continuity of each set.

GROUND FAULT PROTECTION INSPECTION RECORD

Equipment ID No.	Test performed	DATE

Ground Fault Protection

GROUND FAULT PROTECTION INSPECTION RECORD

Equipment ID No.	Test performed	DATE

Ground Fault Protection

SAFETYALERT

ASSURED ELECTRICAL EQUIPMENT GROUNDING CONDUCTOR PROGRAM

INSPECT - TEST - COLOR CODE

ALL ELECTRICAL TOOLS, EXTENSION CORDS, AND EQUIPMENT

FIRST QUARTER

JANUARY 1 – MARCH 31

Ground Fault Protection

COLOR CODE IS

RED

ENSURE ALL ELECTRIC APPARATUS HAVE BEEN SATISFACTORILY TESTED AND COLOR CODED PRIOR TO USE.

SAFETYALERT

ASSURED ELECTRICAL EQUIPMENT GROUNDING CONDUCTOR PROGRAM

INSPECT - TEST - COLOR CODE

ALL ELECTRICAL TOOLS, EXTENSION CORDS, AND EQUIPMENT

SECOND QUARTER

APRIL 1 – JUNE 30

Ground Fault Protection

COLOR CODE IS

BLUE

ENSURE ALL ELECTRIC APPARATUS HAVE BEEN SATISFACTORILY TESTED AND COLOR CODED PRIOR TO USE

SAFETYALERT

ASSURED ELECTRICAL EQUIPMENT GROUNDING CONDUCTOR PROGRAM

INSPECT - TEST - COLOR CODE

ALL ELECTRICAL TOOLS, EXTENSION CORDS, AND EQUIPMENT

THIRD QUARTER

JULY 1 – SEPTEMBER 30

Ground Fault Protection

COLOR CODE IS

GREEN

ENSURE ALL ELECTRIC APPARATUS HAVE BEEN SATISFACTORILY TESTED AND COLOR CODED PRIOR TO USE

SAFETYALERT

ASSURED ELECTRICAL EQUIPMENT GROUNDING CONDUCTOR PROGRAM

INSPECT - TEST - COLOR CODE

ALL ELECTRICAL TOOLS, EXTENSION CORDS, AND EQUIPMENT

FOURTH QUARTER

OCTOBER 1 – DECEMBER 31

Ground Fault Protection

COLOR CODE IS

YELLOW

ENSURE ALL ELECTRIC APPARATUS HAVE BEEN SATISFACTORILY TESTED AND COLOR CODED PRIOR TO USE

H2S Awareness

Purpose

This safety guideline is intended to provide suitable information to all **PNT Consulting LLC** employees regarding the potential toxic effects of Hydrogen Sulfide (H_2S) so that adequate measures can be taken to limit exposures through controls in the workplace.

1. GENERAL

Hydrogen sulfide is ever present in all refineries. In addition it is generated in many industrial processes as a by-product and also during the decomposition of organic matter containing sulfur.

Hydrogen sulfide (H_2S) is a colorless gas that at low concentrations has the odor of rotten eggs. At high concentrations, it kills your sense of smell.

- Formula H2S
- CAS No.: 7783-06-04

H2S is a highly flammable and extremely toxic gas that can form an explosive mixture with air over a wide area.

2. CHARACTERISTICS OF HYDROGEN SULFIDE

When ignition occurs, the combustion produces irritants and toxic gases, including sulfur dioxide (SO2). SO2 has an irritating effect on the eyes and lungs and can be fatal at concentrations about 100PPM.

H2S is heavier than air, has a tendency to settle in low-laying areas, and is readily dispersed by wind movements or currents.

H_2S attacks most metals, especially in the presence of water, forming sulfides that are usually insoluble precipitates. It is also very corrosive to plastics and tissue.

H_2S dissolves in water forming a weak acid (hydro sulfurous acid).

H_2S will be released when in water when agitated making it a dangerous hidden hazard.

3. HEALTH EFFECTS:

The following information outlines the symptoms of hydrogen sulfide at specific concentrations.

10 PPM (0.001% H_2S)

- Obvious and unpleasant odor.
- Burning eye irritation.
- Permissible exposure limit is eight hours.

200 PPM (0.02% H_2S)

- Kills smell quickly.
- Stings eyes and throat.
- Respiratory irritation.
- Death after one to two hours of exposure.

500 PPM (0.05% H_2S)

- Dizziness. Breathing ceases within a few minutes.
- Requires prompt artificial respiration.
- Loss of muscle control, making self-rescue impossible.

1000 PPM (0.10% H_2S)

- Unconsciousness at once, followed by death within minutes.

4. EXPOSURE WARNING

H_2S CAN PARALYZE THE SENSE OF SMELL. DO NOT USE THE SENSE OF SMELL TO DETECT H_2S.

5. H_2S DETECTION AND ALARM SYSTEMS

In most refineries emergency employee alarms are installed to meet the regulatory standards. The alarms provide warning for the necessary emergency action according to the site emergency action plan and provide time for employees to safely escape from the workplace or the immediate area.

Systems are also used on drilling locations, offshore platforms and produce H2S, and some plants. It is not readily used on land production leases. Signs are and should be posted stating the presence of poison gas and urging caution.

6. WARNING CONDITIONS

There are three conditions that you must be aware of when working around H_2S. The following information identifies the level of danger and alarms associated with each condition.

Condition Green

- Possible Danger
- No Alarms

Condition Yellow

- Moderate Danger
- H_2S to 50 PPM
- Intermittent Audible Alarm and Yellow Flashing Light

Condition Red

- Extreme Danger
- H_2S at 50 PPM or Above
- Continuous Audible Alarm and a Red Flashing Light

7. HYDROGEN SULFIDE DETECTION DEVICES

Fixed H_2S detection devices (monitor and indicator) are designed to detect H_2S concentrations in air and established TWA (time weighted average) (10 PPM) and STEL (15 PPM).

The alarm should be capable of being perceived above the ambient noise or light levels in the affected area. The alarm should be distinctive and recognizable as a sign to evacuate the area and to start emergency status emergency procedures.

8. PERSONAL MONITORS

Personal monitors are also available in many types. They are also designed with the employee's safety in mind. Familiarize yourself with the equipment available at your current work assignment.

9. PLANT MONITORS

Plant monitors are available in many types and are designed with the employee's safety in mind. Familiarize yourself with the equipment available at your current work assignment.

In order to respond effectively in an emergency situation, every individual at the site should know their specific responsibilities. Whether or not an individual has an assigned duty, each individual should know what to do in the even of an emergency.

10. EVACUATION

Follow these procedures in the even of a hydrogen sulfide release that requires evacuation:

- Hold your breath and quickly leave the area containing H_2S. Do not inhale.
- Move quickly to the upwind "Safe Breathing Area" to receive instructions.
- Always be conscious of the wind and constantly monitor wind direction. Wind socks and streamers show which direction the wind is blowing so that you can determine the proper safe breathing area.

11. SCBA ESCAPE

- When in an area, on some client's premises, which has required you to be trained to use or wear an escape respirator such as an SCBA, put on your SCBA and help anyone who appears to be affected by the gas.
- Before taking off your make, ensure that the air you will breathe is safe.
- Always be conscious of the wind and constantly monitor wind direction. Wind socks and streamers show which direction the wind is blowing so that you can determine the proper safe breathing area.

12. EMERGENCY RESCUE AND FIRST AID

To prevent risk and injury to other personnel, re-entry into an area of unknown concentration of H_2S will require the use of self-contained breathing equipment and backup personnel.

- Wear a full rescue unit (minimum 30-minute breathing apparatus) before attempting a rescue.
- Remove the victim immediately to fresh air.
- If breathing, maintain the victim at rest and administer respiration immediately.
- If the victim is not breathing, start artificial respiration immediately.
- Call an ambulance and get the victim medical treatment.
- Keep the victim lying down with a blanket or coat under the shoulders to keep airway passage open. Conserve the victim's body heat and do not leave the victim unattended.
- If the eyes are affected by H_2S, wash them thoroughly with clear water. For slight eye irritation, cold compresses are helpful.
- A victim should not return to work until authorized to do so by a physician, even if the victim has had minor exposure and has not completely lost consciousness.

13. PPE (PERSONAL PROTECTIVE EQUIPMENT)

Depending on the exposure i.e., the amount of gas in the air and the type of work, employees will be required to wear different levels of PPE. Examples of protection include:

- When the exposure level is near or above 10 PPM, you will be required to wear self contained fresh air gear.
- Wear chemical goggles or a face shield when eye contact with this material is possible.
- Avoid skin contact. Wear proper clothing such as impervious gloves, long sleeves, apron, and boots.

14. VENTILATION (INDOOR)

Use adequate general and local exhaust ventilation to keep atmospheric vapor concentrations below the occupational exposure limits.

15. EYEWASH AND SHOWERS

Safety showers and eyewash stations must be available in the vicinity of a potential exposure to the material. Familiarize yourself with the location of these facilities before starting the job.

16. TRAINING

All employees will be provided awareness training in this program in order to be familiar with the potential hazards and proper safe work procedures to follow if exposed to this health hazard. The training will be provided prior to working in any job with potential exposure to H_2S operations.

The purpose of hydrogen sulfide training is to familiarize employees with the provincial OHS regulations affecting H_2S operations. Employees will learn the necessary skills to recognize, detect, and use the proper safety equipment in the event of an H_2S incident.

Hazard Communication

1.0 PURPOSE

The purpose of this plan is to establish a program and procedures for the safe use of hazardous chemical substances at PNT Consulting LLC.

The Occupational Safety and Health Administration (OSHA) Hazard Communication Standard (HCS) 29 CFR 1910.1200 (General Industry) and 29 CFR 1926.59 (Construction Industry) call for the development of a hazard communication program when employees may be exposed to any chemical in the workplace under normal conditions of use or in a foreseeable emergency. In 2012, OSHA revised the HCS to align with the Globally Harmonized System of Classification and Labeling of Chemicals (GHS). As a result, this program has been revised to comply with the requirements of the OSHA HCS 2012. The written hazard communication program will include and address the following criteria in order to satisfy the minimum requirements of the OSHA HCS 2012:

- List of all hazardous chemicals known to be present in the workplace or individual work area
- Methods used to ensure that all containers, including pipes and holding tanks, are labeled, tagged or marked properly
- Methods used to obtain and maintain safety data sheets (SDSs)
- Methods used to provide employees with information and training on hazardous chemicals in their work areas
- Methods used to inform employees of the hazards of nonroutine work practices
- Methods used to provide the employees of other employers (e.g., consultants, construction contractors and temporary employees) on-site access to SDSs for each hazardous chemical that the other employer's employees may be exposed to while working in the workplace
- Methods used to inform the employees of other employers of precautionary measures that need to be taken to protect themselves during the workplace's normal operating conditions and in foreseeable emergencies
- Methods used to inform the employees of other employers of the labeling system used in the workplace

The hazard communication program will identify the following:

- Key personnel responsible for the program
- Location of chemical inventory list and SDSs
- Workplace labeling system
- Good work practices and procedures to minimize exposures
- How training will be performed
- Procedures to maintain the program and update the required information
- How records will be maintained

2.0 RESPONSIBILITIES

The Safety Coordinator, Paul Harvey, is responsible for administering the hazard communication program.

This person is also responsible for:

- Reviewing the potential hazards and safe use of chemicals
- Maintaining a list of all hazardous chemicals and a master file of SDSs
- Ensuring that all containers are labeled, tagged or marked properly

- Providing new-hire and annual training for employees
- Maintaining training records
- Monitoring the air concentrations of hazardous chemicals in the work environment
- Properly selecting and caring for personal protective equipment
- Directing the cleanup and disposal operations of the spill control team
- Identifying hazardous chemicals used in nonroutine tasks and assessing their risks
- Informing outside contractors who are performing work on company property about potential hazards
- Reviewing the effectiveness of the hazard communication program and making sure that the program satisfies the requirements of all applicable federal, state or local hazard communication requirements

The purchasing agent, Nicolaza Harvey, is responsible for:

- Contacting chemical manufacturers and/or distributors to obtain SDSs and secondary labels for hazardous chemicals used or stored in the workplace

The receiving department is responsible for:

- Reviewing incoming hazardous chemicals to verify correct labeling
- Holding hazardous chemicals in the receiving area until receipt of the SDS for the product

Employees are responsible for the following aspects of the hazard communication program:

- Identifying hazards before starting a job
- Reading container labels and SDSs
- Notifying the supervisor of torn, damaged or illegible labels or of unlabeled containers
- Using controls and/or personal protective equipment provided by the company to minimize exposure
- Following company instructions and warnings pertaining to chemical handling and usage
- Properly caring for personal protective equipment, including proper use, routine care and cleaning, storage, and replacement
- Knowing and understanding the consequences associated with not following company policy concerning the safe handling and use of chemicals
- Participating in training

3.0 CHEMICAL INVENTORY LIST

Attached to this program is a list of hazardous chemicals used, produced and/or stored at PNT Consulting LLC.

Copies of the chemical inventory list are available in the Document Controls.

This list will contain the product identifier that is referenced on the appropriate SDS, the location or work area where the chemical is used, and the personal protective equipment and precautions for each chemical product. This list will be updated annually and whenever a new chemical is introduced to the workplace.

4.0 LABELS AND OTHER FORMS OF WARNING

Each container of hazardous chemicals received from the chemical manufacturer, importer or distributor will be labeled with the following information:

- Product identifier
- Signal word
- Hazard statement(s)
- Pictogram(s)
- Precautionary statement(s)
- Name, address and telephone number of the chemical manufacturer, importer or other responsible party

PNT Consulting LLC will use the GHS labeling system for secondary containers. When a chemical is transferred from the original container to a portable or secondary container, the container will be labeled, tagged or marked with a GHS label containing the following information:

- Product identifier
- Signal word
- Hazard statement(s)
- Pictogram(s)
- Precautionary statement(s)

Portable containers into which hazardous chemicals are transferred from labeled containers and that are intended for the immediate use of the employee who performs the transfer do not require a label. If the portable container will be used by more than one employee or used over the course of more than one shift, the container must be labeled. Food and beverage containers should never be used for chemical storage.

Signs, placards, process sheets, batch tickets, operating procedures or other such written materials may be used in lieu of affixing labels to individual, stationary process containers as long as the alternative method identifies the containers to which it is applicable and conveys the information required for workplace labeling.

Where an area may have a hazardous chemical in the atmosphere (e.g., where extensive welding occurs), the entire area will be labeled with a warning placard.

Pipes that contain hazardous chemicals should be labeled in accordance with ANSI/ASME A13.1 and indicate the direction of flow. (Please note that this not a requirement of the OSHA HCS but a best practice or requirement of local jurisdiction.)

Workplace labels or other forms of warning will be legible, in English and prominently displayed on the container or readily available in the work area throughout each work shift. If employees speak languages other than English, the information in the other language(s) may be added to the material presented as long as the information is presented in English as well.

Note: *After Dec. 1, 2015, distributors may not ship containers labeled by the chemical manufacturer or importer unless the label on the container meets GHS labeling requirements.*

5.0 SAFETY DATA SHEETS

An SDS will be obtained and maintained for each hazardous chemical in the workplace. SDSs for each hazardous chemical will be readily accessible during each work shift to employees when they are in their

work areas.

SDSs will be obtained from the chemical manufacturer, importer or distributor. The name on the SDS will be the same as that listed on the chemical inventory list. SDSs for chemicals or process streams produced by the company will be developed and provided by the Safety Coordinator.

The Safety Coordinator will maintain the master file of all original SDSs. Hard copies of the master file will be located in the PNT Consulting LLC Corporate Head Quarters at 528 County Road 1546, Hughes Springs, TX 75656.

SDSs for new products or updated SDSs for existing products will be obtained by the purchasing agent and forwarded to the safety coordinator. The Safety Coordinator will then update the master file with new and/or updated SDSs.

If problems arise in obtaining an SDS from the chemical manufacturer, importer or distributor, a phone call will be made to request an SDS and to verify that the SDS has been sent. The phone call will be logged and a letter will be sent the same day. The company will maintain a written record of all efforts to obtain SDSs. If these efforts fail to produce an SDS, the local OSHA office will be contacted for assistance.

6.0 EMPLOYEE INFORMATION AND TRAINING

Employees included in the hazard communication program will receive the following information and training prior to exposure to hazardous chemicals and when new chemical hazards are introduced to their work area:

- Requirements of the OSHA Hazard Communication Standard 29 CFR 1910.1200 (General Industry) or 29 CFR 1926.59 (Construction Industry)
- Operations in the work area where hazardous chemicals are present
- Location and availability of the hazard communication program, chemical inventory list and SDSs
- Methods and observations used to detect the presence or release of a hazardous chemical in the work area, such as monitoring devices, visual appearance or odor of hazardous chemicals when being released
- Physical, health, simple asphyxiation, combustible dust and pyrophoric gas hazards, as well as hazards not otherwise classified of the chemicals in the work area
- Measures employees can take to protect themselves from hazards, such as appropriate controls, work practices, emergency and spill cleanup procedures, and personal protective equipment to be used
- Explanation of the labels received on shipped containers
- Explanation of the workplace labeling system
- Explanation of the SDS, including order of information and how employees can obtain and use the appropriate hazard information

Note: *To facilitate understanding of the new GHS system, the OSHA HCS requires that employees be trained regarding the new label elements and SDS format by Dec. 1, 2013. Employers are required to update the hazard communication program and to provide any additional training for newly identified physical or health hazards no later than June 1, 2016.*

7.0 NONROUTINE TASKS

The Safety Coordinator and the immediate supervisor of an employee performing a nonroutine task, such as cleaning machinery and other process equipment, is responsible for ensuring that adequate training has been provided to the employee on any hazards associated with the nonroutine task. Employees share in this responsibility by ensuring that their immediate supervisor knows that the nonroutine task will be performed.

Special work permits are required for the performance of certain nonroutine tasks, such as entry to confined spaces, breaking and opening piping systems, and welding and burning. For some special tasks, employees are required to follow special lockout/tagout procedures to ensure that all machinery motion has stopped and energy sources are isolated prior to and during the performance of such tasks.

8.0 CONTRACTORS

Prior to beginning work, the Safety Coordinator will inform contractors with employees working on company property of any hazardous chemicals that the contractors' employees may be exposed to while performing their work. The Safety Coordinator will also inform contractors of engineering or work practice control measures to be employed by the contractor, personal protective equipment to be worn by the contractors' employees, and any other precautionary measures that need to be taken to protect their employees during the workplace's normal operating conditions and in foreseeable emergencies.

Furthermore, the Safety Coordinator will advise contractors that they must comply with all OSHA standards while working on company property. Appropriate controls will be established with the contractor to ensure that company employees are not exposed to safety and health hazards from work being performed by the contractor and that company operations do not expose contractors' employees to hazards.

The Safety Coordinator will inform contractors of the workplace labeling system and the availability and location of SDSs for any chemical to which contractors' employees may be exposed while performing their work.

9.0 RECORDKEEPING

Records pertaining to the hazard communication program will be maintained by the Document Controls. The Safety Coordinator will keep the following records:

- Chemical inventory list
- Hazardous material reviews
- Copies of phone call logs and letters requesting SDSs
- Employee training records
- Warnings issued to employees for not following the hazard communication program

Hearing Conservation Program

1.0 PURPOSE

Purpose

The company has established a Hearing Conservation Program to protect worker(s) from the hazards of noise on the job. Provincial OHS Act and Regulations require that each employer implement a hearing conservation program when workers are exposed to noise levels exceeding 85 dB. It is not hard to exceed this level of noise on many of the jobs sites. Typically, noise levels exceeding 85 dB are experienced when working with any type of pneumatic chipper or hammer, metal saw, grinders and heavy machinery. See attachment I for list of some common noise levels.

Responsibility

The Manager of Operations is responsible for the developing a written Hearing Conservation Procedure and overseeing the training of all employees in the company. The Manager of Operations is also responsible for the monitoring and administering this procedure.

Introduction

The OSHA Standard on Occupational Noise Exposure, 29 CFR 1910.95, established the permissible limit of noise as 85 dB(A) (decibels), expressed as an eight-hour (8-hours), time-weighted average, (TWA). This standard allows short-term unprotected noise exposure up to a maximum of 115dB (A), peak sound.

The noise standard requires the identification by personnel monitoring of employees who may be exposed above the 85 db (A), 8-hour, TWA. Hearing protection is also required for specific activities or using certain types of equipment.

Procedures

The company has taken a conservative approach to noise hazards by establishing this program. The following elements establish the program:

- An Audiometric Testing Program
- An Employee Education and Training Program
- Monitoring and Analysis of Workplace Noise Levels
- Providing Suitable Engineering Controls
- Providing Hearing Protectors
- Maintain required Records

Audiometric Testing Program

Each new employee whose work exposes them to “excess noise levels” as defined by the provincial OHS Regulation, will receive an Audiometric test as part of a pre-screening physical examination to establish a baseline audiogram against which subsequent audiograms can be compared.

Hearing Conservation Program

Annually, all employees who are exposed to noise levels exceeding the 85 dB standard will be given a follow-up Audiometric examination to monitor for any significant changes in their hearing ability. Employees will be formally notified if there is any change in their hearing as the result of the testing. The Standard has defined this shift as a change in hearing threshold relative to the baseline audiogram of an average of 10 dB or more at 200, 3000 and 4000 hz in either ear. In determining whether a standard threshold shift has occurred, allowance may be made for the contribution of aging (presbycusis) to the change in hearing level by correcting the annual audiogram according to the procedure described in Appendix F: "Calculation and Application of Age Correction to Audiograms." When audiometric testing is required, each affected employee must not be exposed to any workplace noise for at least 14 hours prior to his/her test. This requirement may be met by wearing hearing
protectors which will reduce the employee's exposure to a sound level of 80 db (A) or below.

Audiometric tests shall be performed by a licensed or certified audiologist, otolaryngologist, or other physician, or by a technician who is certified by the Council of Accreditation in Occupational Hearing Conservation, or who has satisfactorily demonstrated competence in administering audiometric examinations, obtaining valid audiograms, and properly using, maintaining and checking calibration and proper functioning of the audiometers being used. A technician who operates microprocessor audiometer does not need to be certified. A technician who performs audiometric tests must be responsible to an audiologist, otolaryngologist or physician.

An audiologist, otolaryngologist or physician will review problem audiograms and shall determine whether there is a need for further evaluation. The company will provide tot eh person performing this evaluation the following information:

a. A copy of the 29 CFR 1910.95 Hearing Conservation.
b. The baseline audiogram and most recent audiogram of the employee to be evaluated.
c. Measurement of background sound pressure in the audiometric test room as required in 29 CFR 1910.95 Appendix D.
d. Records of audiometric calibrations as required by 20 CFR 1910.95 Appendix E.

If a comparison of the annual audiogram to the baseline audiogram indicates a standard threshold shift as defined by OSHA, the employee will be informed of this fact, in writing, by the company within 21 days of determination.

Unless a physician determines that the standard threshold shift is not work related or aggravated by occupational noise exposure, the company will ensure that the following steps are tank when a standard threshold shift occurs:

a. An employee hot using hearing protectors will be fitted with hearing protectors, trained their use and care, and required to use them; and
b. An employee already using hearing protectors shall be refitted and retrained in the use of hearing protectors and provided with hearing protectors offering greater attenuation if necessary.
c. Refer the employee for a clinical audiological evaluation or an otological examination, as appropriate, if additional testing is necessary or if the company suspect that a medical
pathology of the ear is caused or aggravated by the wearing of haring protectors.
d. Inform the employee of the need for an otological examination if a medical pathology of

the ear which is unrelated to the use of hearing protector is suspected.

If subsequent audiometric testing of an employee whose exposure to noise is less than an 8-hour TWA average of 90 decibels indicates that a standard threshold shift is not persistent the company:
a. Will inform the employee of the new audiometric interpretations: and
b. May stop the required use of hearing protectors for that employee.

Employee Education and Training

The company employees must be trained on the use of personal hearing protection equipment. Also each employee must know how to clean and maintain the hearing protection equipment.

- The training will cover the following:
- Training will be for all employees who are exposed to noise at or above the 8-hour TWA of 85 dB.
- The training will be repeated annually for each employee included in the hearing conservation program.
- The effects of noise on hearing
- The purpose of hearing protectors, the advantages, disadvantages, and the attenuation of various types and instruction on selection, fitting, use and care
- The purpose of audiometric testing, and an explanation of the test procedures.
- Access to information and training materials.

Monitoring and Analysis of Workplace Noise Levels

The companies will periodically or as necessary, conduct noise level surveys of the workplace. The results of these surveys will be made available to employees.

Any job area or company location found to be in excess of the allowable designated noise levels that cannot be brought into compliance with the noise standard will be designated as an area where hearing protectors are to be worn. When signs are posted employees must wear hearing protection. The signs may read as follows:

NOTICE
EAR PROTECTION
REQUIRED
IN THIS AREA

REMEMBER: A client may determine if a unit or work area is classified as a high noise area. After the determination is made, company employees will be instructed to wear the appropriate hearing protection.

Provide Suitable Engineering Controls

Where appropriate, the company will provide engineering controls to reduce noise exposure. Due to the complexity of most job sites, it is difficult if possible to institute effective engineering controls for most noise exposures. Should this be the case, then employees will be required to wear suitable hearing protection.

Provide Hearing Protectors Where Required

The company will provide the required employees with hearing protectors if his/her 8 hour TWA is above the 85dB (A). The company will also make hearing protectors available to all employees exposed to a TWA above 85dB (A) at no cost to the employee. Any employee who may have a significant threshold shift of hearing level will be required to wear hearing protection if they are exposed to noise TWA of 85dB. The company will ensure all Hearing protectors meet the requirements in CSA Standard Z94.2-02, Hearing Protection Devices – Performance, Selection, Care and Use. The company will make a concerted effort to fine the right protector for each employee, one that offers the right attenuation, is accepted on the terms of comfort, and is used by the employee.

Responsibilities

A CLIENT WILL:
a. Determine all sources of noise at or above 85dD.
b. Determine if personnel have 8-hour TWA exposures at or above fifty-percent (50%) of the OSHA allowable.
c. Review noise exposures annually for all job classifications with TWA
d. Exposure at or above fifty-perent (50%)

e. Ensure that audiograms are made annually for personnel whose TWA exposures are at or above fifty-percent (50%) of the OSHA allowable.

JOB SITE SUPERVISION WILL:

a. Will require hearing protection in all area with noise levels at or above the 85dB(A) and for all task which generate such noise level (i.e., grinding, hammering). Ear plug shall be required in an area and/or on tasks with the sound levels exceeding 105dB.
b. To alert employees to possible hazardous noise exposures, Signs shall be posted in work areas in which the sound levels may exceed 85dB. These signs will be posted by the client.
c. Evaluate the need for engineering and/or administrative controls to reduce the noise levels below the 85 dB and, where feasible, develop a plan to reduce all personnel exposures to less than fifty- percent (50%) of the OSHA allowable.
d. Make hearing protection available and enforce its use by all employees with TWA exposures at or above the fifty-percent (50%) of the OSHA allowable and/or by those who must enter or work in areas where the noise level is 85dB or above.

REMEMBER - The client determines if a unit or work area is classified as a high noise area. After the determination is made, the company's employees will be instructed to wear the appropriate hearing protection.

Recordkeeping

All record-keeping for this program will be maintained in the office. Records will include:

a. Audiometric tests
b. Noise surveys

c. Employee training
d. Engineering controls implemented
e. Record of purchase of hearing protector

Work required Hearing Protectors

There are many jobs or types of work that generally produces noise level that intermittently or for short durations exceed the permissible TWA. It is the policy of the company to require all workers who are engaged in these jobs to wear hearing protectors. The attached list is some of those jobs.
See Attachment

Hearing Protectors

Employees may choose the type of hearing protection that best suits their particular assignment and personal preference for among those listed below. Each employee required to wear hearing protection is responsible for carrying hearing protection on his/her person. Hearing protection is furnished at no cost to employees.

EAR PLUGS – Most ear plugs, when worn properly, have a noise reduction rating (NRR) on the package. Most ear plugs have NRR of about 30.

EAR MUFFS – Adjustable muffs can be worn in three positions:

POSITION	NRR
1. Over the head	24 this depends on the NRR of the Ear Muff)
2. Under the chin	20
3. Behind the head	20

COMPUTING THE HEARING PROTECTION LEVEL

To compute the actual hearing protection level under the protector, subtract 7 dB(A) from the Noise Reduction Rating (NRR), then divide the number by 2, and subtract the remainder form the measured noise level dB (A).

For example: NRR of 29 -7 = 22 dB(A)
22 dB(A) ÷ 2 = 11 dB(A)

Noise level of 95 dB(A) – 11 = 84 dB(A)
Therefore, this device offers a protection level of 11 dB(A).

ATTACHMENT I

The following list represents some work activities and equipment which will require the use of hearing protection:

ACTIVITIES AND/OR EQUIPMENT TYPICALLY RESULTING IN HIGH NOISE LEVEL	ESTIMATED AVERAGE NOISE LEVEL dB(A)
1. Air Arc Gouging	115
2. Air compressor	95
3. Chain saw	107
4. Electric Disc Grinder	100
5. Forklift inside a trailer	98
6. Heavy equipment working	100
7. Impact tools	108
8. Pneumatic chipping hammer	110
9. Abrasive blasting	100
10. Welding machines	95

ATTACHMENT II
HEARING CONSERVATION PROGRAM
FOLLOW UP TRAINING RECORD

FROM: _____
Manager or Supervisor

The employee listed below recently was found to have a confirmed significant shift in the hearing threshold (as defined by OSHA). An investigation and additional training is required. When this form is completed and reviewed with the employee, please file in the office.

EMPLOYEE NAME:_____
Print or type First, MI, Last Name

_____ _____ _____
Social Security Number or Employee Number **Reported Date**

JOB CATEGORY _____
(Current Assignment)

The Potential for noise exposure and specific requirements for using hearing protection in their area should be reviewed with this employee within 2 weeks. If hearing protection requirements have not been established in this work area, it must be done as soon as possible.

The retraining for this employee should include:

* The temporary and permanent effects of noise on hearing
* Established hearing protection requirements
* Any questions the employee may have on the use of hearing protection
* The proper use of hearing protection
* Comments the employee has on potential off-the-job noise exposure

Comments on discussion held:_____
_____

I have discussed the above items with this employee:

_____ _____ _____
Manager or Supervisors Name (print) Signature Date of Discussion

Heat & Cold Stress

1.0 PURPOSE

The company has developed this program to address the hazards associated with heat- and cold-related illness.

PREVENTING HEAT-RELATED ILLNESSES (HEAT STRESS)

Heat Stress

Heat stress takes place when your body's cooling system is overwhelmed. It can happen when heat combines with other factors such as:

- hard physical work;
- fatigue (not enough sleep);
- dehydration (loss of fluids); and
- certain medical conditions.

Heat stress can lead to illness or even death. The company has a duty to take every precaution reasonable in the circumstances to protect their workers.

Heat stress symptoms

Heat rash: itchy red skin.
Heat cramps: painful muscle cramps.
Heat exhaustion: high body temperature; weakness or feeling faint; headache, confusion or irrational behaviour; nausea or vomiting.
Heat stroke: no sweating (hot, dry skin), high body temperature, confusion, or convulsions. Get immediate medical help.

Precautions when working in hot, humid conditions

- Increase the frequency and length of rest breaks.
- Provide **cool drinking water** near workers and remind them to drink a cup every 1/2 hour.
- Caution workers about working in direct sunlight.
- Train workers to recognize the signs and symptoms of heat stress. Start a "buddy system" because it's unlikely people will notice their own symptoms.
- Tell workers to wear light summer clothing to allow air to move freely and sweat to evaporate. They should always wear shirts to protect themselves from direct sunlight.

Cold Stress

When you're cold, blood vessels in your skin, arms, and legs constrict, decreasing the blood flow to your extremities. This helps your critical organs stay warm, but your extremities are at risk for frostbite.

Frostbite means that your flesh freezes. Blood vessels are damaged and the reduced blood flow can lead to gangrene.

The first sign of frostbite is skin that looks waxy and feels numb. Once tissues become hard, it's a severe medical emergency.

Wind chill accelerates heat loss—sometimes to a dramatic extent. For example, when the air temperature is

–30°C,

- with no wind, there is little danger of skin freezing;
- with 16 km/h wind (a flag will be fully extended), your skin can freeze in about a minute; and
- with 32 km/h wind (capable of blowing snow), your skin can freeze in 30 seconds.

When your core temperature drops, you're at risk for hypothermia. Early signs of hypothermia are shivering, blue lips and fingers, and poor coordination. Soon your breathing and heart rate slow down, and you become disoriented and confused. Hypothermia requires medical help.

Precautions to prevent cold stress

- Wear several layers of clothing rather than one thick layer.
- Wear gloves if the temperature is below 16°C for sedentary work, below 4°C for light
- work, and below –7°C for moderate work.
- Take warm, high-calorie drinks and food.
- If your clothing gets wet at 2°C or less, change into dry clothes immediately to prevent hypothermia.
- If you feel hot, open your jacket but keep your hat and gloves on.
- Give workers warm-up and rest breaks in a heated shelter. Ensure work is not conducted only within allowable exposure limits, as per provincial OHS Regulations.

Hexavalent Chromium

1.0 PURPOSE

Hexavalent Chromium (Chromium VI or Cr VI)

PNT Consulting LLC has gathered enough raw data (industrial hygiene monitoring and shared industry data) to show that outside laydown yards/large warehouse fab shops and safety attendants outside the confined space will fall into the exception as noted below so nothing new outside of normal permit/client/regulatory required PPE conditions will be necessary.

However, we **do not** have enough data to prove that we are under the standard (November 27th, 2006) when working in confined spaces with Hex Chrome, and therefore will have to make some changes to work involving welding of chromium (VI) in confined spaces.

Exception to the standard:

Where the employer has objective data demonstrating that a material containing chromium or a specific process, operation, or activity involving chromium cannot release dusts, fumes, or mists of chromium (VI) in concentrations at or above 0.5 µg/m³ as an 8-hour time-weighted average (TWA) under any expected conditions of use.

Definitions:

- **Action Level** = a concentration of airborne chromium (VI) of 2.5 micrograms per cubic meter of air (2.5 µg/m³) calculated as an 8-hour time-weighted average (TWA)
- **Chromium (VI) [hexavalent chromium or Cr(VI)**] means chromium with a valence of positive six, in any form and in any compound
- **Emergency** means any occurrence that results, or is likely to result, in an uncontrolled release of chromium (VI). If an incidental release of chromium (VI) can be controlled at the time of release by employees in the immediate release area, or by maintenance personnel, it is not an emergency
- **Employee Exposure** means the exposure to airborne chromium (VI) that would occur is the employee were not using a respirator
- **Regulated Area** means an area, demarcated by the employer, where an employee's exposure to airborne concentrations of chromium (VI) exceeds, or can reasonably be expected to exceed the PEL

- **Access to Regulated Area** shall be limited to:
    1. Persons authorized by the employer
    2. Persons with required work duties in the regulated area
    3. Employees are not permitted to eat, drink, smoke, chew tobacco or gum, or apply cosmetics in the regulated area where skin and eye contact with Chromium VI may occur
- **Permissible Exposure Limit (PEL).** PNT Consulting LLC shall ensure that no employee is exposed to an airborne concentration of chromium (VI) in excess of 5 micrograms per cubic meter of air (5 µg/m³), calculated as an 8-hour time-weighted average (TWA)

    1. Below 0.5 µg/m³ under any condition – Exempt

    2. Between 0.51 and 2.5 µg/m³
        1. Housekeeping – no dust
        2. Clean eating and drinking areas

    3. Above action level 2.5 µg/m³ for more than 30 days per year
        1. All of the above
        2. Install engineering controls within four years (our Clients will be working on this through their own upgrades)
        3. Personal respiratory protection
        4. Monitoring every 6 months
        5. Medical Surveillance, at least annually
        6. Recordkeeping, Hazard Communication Training

    4. Above the PEL 5.0 µg/m³

1. All of the above
2. Establish regulated areas – roped off, limited access, PPE, washing facilities
3. Monitoring every 3 months

- Respiratory protection – Fresh air will be the only method currently that will prevent airborne exposure and eye exposure when being exposed to the PEL.
- Skin protection – if exposure or likely exposure is there, then appropriate skin protection such as Tyvek and gloves (disposable type PPE).
- No PPE that is contaminated shall be removed from the job site, except by those employees whose job it is to launder, clean, maintain, or dispose of such clothing and equipment (all clothing/equipment being removed for laundering, cleaning, maintenance, or disposal shall be transported in sealed, impermeable bags or other closed, impermeable containers).
- Removal of chromium (VI) from protective clothing and equipment by way of blowing, shaking, or any other means that disperses chromium (VI) into the air or onto an employee's body is prohibited.
- Access to regulated areas will be limited to those employees with the authority to be there. Regulated areas will be marked as such.
- A medical surveillance program including notifications and medical follow-ups will be required for any employee who is exposed at no cost to the employee (medical examination to include: medical work history, with emphasis on: past, present, and anticipated future exposure to chromium (VI); any history of respiratory system dysfunction; any history of asthma, dermatitis, skin ulceration, or nasal septum perforation; and smoking status and history; physical examination of the skin and respiratory tract; and any additional tests deemed appropriate by the examining physician).
- If any employee exposure exceeds the PEL, PNT Consulting LLC will notify the employee within 15 days in writing of the exposure.
- When protective clothing is required, a change room facility must be provided and the room will include separate areas for protective clothing and street clothes to prevent cross-contamination.
- Where skin contact with chromium (VI) occurs, washing facilities must be provided and employees must wash their hands and faces at the end of the shift and prior to eating,

drinking, smoking, chewing tobacco or gum, applying cosmetics, or using the toilet (non of these activities can be done in the regulated area).

- Housekeeping – all areas contaminated with chromium (VI) will be cleaned by HEPA-filter vacuuming or other methods that minimize the likelihood of exposure. All surfaces must be kept as free as practical of Chromium VI. Waste, scrap, debris, and other materials with Chromium VI must be placed in impermeable bags and labeled according to the Hazard Communication Standard prior to disposal.

Training:

- Only trained and qualified personnel may operate or maintain welding, cutting or brazing equipment. Welders/Cutters who may be exposed or have the potential to be exposed will be trained per this policy and will posses the appropriate certifications for their work scope.
- Craft who perform any of the functions covered by this policy will be required to complete training per PNT Consulting LLC Training policy including:
    - A test or other method to determine competency;
    - Training initial to assignment and at least annually thereafter;
    - All training records shall be documented and kept on file for the duration of the covered employee's employment.
        - Documentation will include outline or class name, the names and employee numbers of the employees who participated in the training, names and signatures of those who trained the class and a class date).

Medical Surveillance/Written Exposure Plan:

While PNT Consulting LLC work should not expose employees to at or above the action level, if those levels are reached, then a written exposure plan including annual reviews and updates will be required. Should employee(s) become exposed to at or above action levels related to work exposures and Hexavalent Chromium VI, then employees will receive a medical evaluation, which will include tests to determine exposure and a medical history. This is provided at not cost to the employee. As with all medical records, these are kept strictly confidential. The employee or representative is entitled to see the records of measurements of the exposure. The employee can also request that medical records for exposure be furnished to the employee's personal physician or designated representative.

Hot Work

1.0 PURPOSE

The purpose of this policy is to establish cutting and welding safety procedures and to ensure that all cutting and welding operations are performed in the safest manner possible, and in compliance with applicable regulations.

POLICY:

All cutting and welding operations shall be performed in compliance with OSHA standards and all other applicable state, local and client regulations, policies, procedures and standard safe work practices. Welding is restricted to areas or situations where adequate fire prevention, welder protection and passerby protection can be assured.

PROCEDURES:

This safety standard is intended as a guide to safe practices in welding, burning, brazing and related operations. The precautions and protective measures outlined are recommended minimum requirements. Welders should exercise judgment in applying these precautionary measures in such matters as length of work periods, poor ventilation, unusual work locations, and specialized operations. Additional protective measures may be required in certain instances.

TRAINING:

- Fire Watch Training – At a minimum the fire watch will be trained to the following standards: A "Fire Watch" is a person specifically trained and assigned to warn others of hazards associated with flammable materials, and when capable to prevent incipient stage fires.
    - Ensure proper "Hot Work" permit is on site
    - Ensure permit is signed by all appropriate personnel
    - Ensure adequate means of access and egress are provided to the work site
    - Read and understand all permit provisions, and maintain the conditions of the permit at all times
    - Wear an identification vest (made of flame retardant material)
    - Maintain appropriate sewer drain coverage (if applicable)
    - Maintain a charged fire hose to the end nozzle, and/or a charged dry chemical fire extinguisher with current inspection tags

- Maintain spark containment by using approved fire blankets
- Prevent the taking of samples, venting, or opening of piping or equipment in the immediate area of the hot work
- Must be able to communicate in English so that you can inform others in the event of emergency conditions
- Determine the exact location of firefighting equipment in the immediate area
- Ensure proper barricading and warning signs are used
- Continuously monitor the work area during and for 30 minutes after hot work has finished to ensure no smoldering embers or slag exist
- During actual hot work, keep area wet when possible
- Continuously monitor the work area and surrounding area for any unsafe conditions, or potentially hazardous conditions
- In the event of a hazardous condition, emergency, or changing environment, the fire watch will stop all work until it is safe to resume
- Never leave the work site unless the work has stopped, or until you are relieved by another employee with equal or greater training and knowledge
- Ensure surrounding conditions are inspected and precautions are taken with consideration given to wind direction
- Ensure equipment such as welding machines, hoses, tools, etc., are located so as not to impede access or egress, or access to firefighting equipment
- In the event of a fire - Remain calm
- Only extinguish a fire when it is clearly within your abilities and the equipment available
- Know the location of the nearest alarm and how to activate the emergency system
- Know the evacuation routes and collection points
- If the fire cannot be extinguished, leave the area immediately and report to your evacuation area
- Await further instructions from the Incident Commander, or designated responsible personnel

- Only trained and qualified personnel may operate or maintain welding, cutting or brazing equipment Welders/Cutters will be trained per this policy and will posses the appropriate certifications for their work scope.

- Craft who perform any of the functions covered by this policy will be required to complete training including:
    - A test or other method to determine competency
    - All training records shall be documented and kept on file with Human Resources

General Rules

Initial Assessment – Fire is a primary focus and the assessment for fire protection guide should be used:

A dedicated fire watch is required for all hot work. If the object to be cut, burned or brazed cannot be moved and if all fire hazards cannot be removed, then guards shall be used to confine the heat sparks and slag and to protect the immovable fire hazards. If these steps cannot be taken to prevent fire, then the hot work will be stopped until a safer alternative is available to perform the work safely.

Supervisor/qualified personnel will inspect the area prior to work beginning, and authorize the work. The competent person will be trained to perform his/her job functions and to identify substandard conditions/acts. The competent person shall ensure all oxygen-fuel gas supply equipment is suitable, safe to use, and in good working condition for the hot work.

Inspections and certification records will be kept for recordkeeping.

If	And	Then
The object to be welded, cut or heated can be moved	A fire-resistant, safe workspace is available	Welding, cutting or heating shall be done in that space.
The object to be welded, cut or heated cannot be moved	All fire hazards can be moved to a safe distance	Welding, cutting or heating can be done once fire hazards are taken to a safe place.
The object to be welded, cut or heated cannot be moved	All the fire hazards cannot be removed	Guards shall be used to confine the heat, sparks, and slag, and to protect the immovable fire hazards.

1. Before doing any welding or burning, outside of an area approved for routine hot work, be certain the necessary Hot Work Permit has been issued. All hot work will be approved by the client and the site supervisor. The crew responsible for the equipment will ensue all is suitable and in good working order. All equipment is inspected prior to beginning work and all crew members using the equipment will be familiar with “American Welding Society

Standard A6-1-1966". Any equipment that is not ready for service or needs repair shall be red-tagged and repaired by qualified personnel.

2. Whenever it is necessary for hoses, lines or cords to cross walkways or work areas, they must be strung overhead or protected by planks laid on both sides of the hose. All hoses, cord and leads and other welding equipment must be maintained in a safe and serviceable condition, with no fraying or exposed copper permitted. They should be deployed in a manner that does not create tripping hazards.
3. Contain all sparks with fire blanketing.
4. Before each use, hose must be inspected for leaks, burns, worn places, loose connections, or other defects which may render the hose unfit for service. Hose burned by a flash back must be discarded.
5. Welding machine ground connections must be made on or as close as possible to the object being worked upon to assure a good ground and prevent damage to valves, pump bearings, etc.
6. Welding machine grounds shall not be made to handrails, stairs, or to projections from steel power or lighting towers, or on any active oil, gas, steam, air, or chemical line.
7. Temporary power lines to portable arc welding machines should be carried overhead whenever practical, or laid on the floor or ground suitably protected so that they cannot be damaged or interfere with safe passage.
8. Necessary precautions must be taken to protect against electrical shocks when working in wet or damp places.
9. In electric welding, all parts of the body should be covered to prevent skin burns from ultra-violet rays or molten metal. The feet and ankles are particularly vulnerable to burns, and care should be taken to see that they are properly protected.
10. Do not use ear cotton when welding. Sparks or slag may ignite the cotton.
11. Welding rod shall not be stored in its original container once the container has been opened. When an original container is opened, the rod shall be immediately transferred to either a rod oven or an approved container, such as the plastic "rod guard" container. The original container shall then be crushed and properly disposed of.
12. Full spark containment is required and any exposed equipment or small bore piping must be protected from damage. A trained fire watch must be present at all times hot work is in progress.
13. Two sets of Flash Back arrestors must be installed on oxyacetylene system; one set installed at regulators and one set at torch handle (unless torch is equipped with arrestors).

14. Welders must wear Z-87 Safety Glasses with side shields under their welder's hoods.
15. Grinders are required to have OSHA approved guards in place at all times. Exceptions must be approved by the Safety Department.
16. Only pipe stands that are designed to prevent pinch points at the center tube locking washer, and a stop at the base of the center tube to prevent crushing type injuries shall be used.
17. All welding rigs must be in safe operating condition and be properly identified.
18. Welding rigs must have emergency brake set and transmission in park or low gear when parked. If there is any slope the wheels must be chocked. When exiting a welding rig, welders must wear all required PPE.
19. The work area must be kept clean and materials including used weld rod removed when job is complete.
20. All welding rigs shall have a fire extinguisher.
21. Approved spark arrestors are required on all welding machines.
22. Always inspect grinders before each use. Grinders must have ground fault circuit interrupters (GFCI's)
23. Welding hoods must be equipped with the proper shaded lens for protection against radiant energy. (according to chart)
24. Make sure all sewers, drains, pits, pipe trenches, confined spaces; enclosed spaces have been tested for flammable vapors and/or hydrocarbons. Cover all openings per client policy.

Filter Lens Shade Numbers for Protection against Radiant Energy

Shade Number	Welding Operation
10	Shielded metal arc welding 1/16, 3/32, 1/8, 5/32-in. diameter electrodes
11 12	Gas-shielded arc welding (nonferrous) 1/16, 3/32, 1/8, 5/32-in. diameter electrodes
12	Gas-shielded arc welding (ferrous) 1/16, 3/32, 1/8, 5/32-in. diameter electrodes
14	Shielded metal-arc welding 3/16, 7/32, 1/4-in. diameter electrodes
10 to 14	Shielded metal-arc welding 5/16, 3/8-in. diameter electrodes.

Hot Work

14	Atomic hydrogen welding
2	Carbon arc Welding
3 or 4	Soldering
3 or 4	Torch Brazing
4 or 5	Light cutting, up to 1 in.
5 or 6	Medium cutting, 1 in. to 6 in.
4 or 5	Heavy cutting, over 6 in.
5 or 6	Gas welding (light), up to 1/8-in.
6 or 8	Gas welding (medium), 1/8-in. to 1/2-in.
	Gas welding (heavy), over 1/2-in.

Gas Cylinders

1. Compressed gas cylinders are to be shut-off at the bottle when not in use or unattended for short periods of time. At the end of the shift the bottles are to be shut off and gauges and hoses detached and properly stored and protective caps installed.
2. Compressed gas cylinders shall have gauges removed and be capped prior to transportation. Cylinders shall only be transported or stored in the up position.
3. Use approved storage racks or dollies to store compressed gas cylinders. Chain or #9 wire may also be used. Never use rope for this purpose.
4. On welding rigs compressed gas cylinders shall be securely stored in vertical racks.
5. Oxygen and acetylene cylinders must be stored at a distance of 20 feet apart or be separated by a fire wall that is 5 feet or higher and has a fire rating of 60 minutes or more. These cylinders must be kept at least 20 feet away from combustibles or separated by a fire wall.
6. Do not use a choker or chokers to haul cylinders.
7. Keep cylinders away from work so sparks, slag, or flame cannot reach them. If cylinders cannot be isolated, fire resistant shields must be provided for them.
8. Cylinders shall always have the gauges removed and cylinder caps installed prior to being moved.
9. Acetylene shall never be exposed to unalloyed copper except in a torch.

10. Compressed gas cylinders shall be equipped with connections that conform to ANSI B57.1-1965.
11. Cylinders shall be marked to identify contents.
12. No more than 15 psi of acetylene shall be used at any time.
13. Bottles shall be slightly opened then closed just prior to attachment of the regulator.
14. Torches shall be lighted by friction lighters, not matches or other hot work.
15. Welders must insure that lines have been adequately purged prior to working on them.
16. Equipment shall be inspected for leaks daily. Unserviceable/non-approved equipment may not be used.
17. All welders shall possess current certifications.
18. Hot work area shall be kept damp at all times.
19. Unattended/unused welding machines shall be turned off.
20. Fire Watches shall remain on site for 1/2 hour after job.
21. MOST IMPORTANTLY: NO HOT WORK PERMIT = NO WELDING.

Ventilation

The following are ventilation requirements for welding.

1. Ensure that adequate ventilation is provided for employees working with welding and cutting equipment. Confined space work will have a plan to address securing of cylinders, lifelines, and warning systems that will be utilized by the safety attendant (Fire Watch/Confined Space Attendant).
2. Ensure that contaminated air exhausted from a working space is discharged into the open air or otherwise clear of the source or intake air.
3. Do not use oxygen for ventilation, comfort cooling, blowing dust from clothing, or for cleaning a work area.
4. Ensure that all necessary precautions are taken to prevent the accumulation of gases when cutting torches are used.
5. Do not take compressed gas cylinders into confined areas.
6. Ventilation equipment consists of air siphons (air movers), and/or exhaust blower (copus air mover).

7. When using blowers or siphons to exhaust fumes, exhaust inlet must be kept as close as possible to the work. Air siphons use large amounts of compressed air. The following safety procedures shall be followed:

   - Keep connecting air hoses as short as possible.
   - Do not attempt to operate more than one siphon off a single air hose or outlet.
   - If used to exhaust a vessel, be sure to seal the bell of the inlet side around the manhole or vessel opening.
   - A daily inspection of the safety screens' condition should be accomplished on the blowers. Repair or replace if broken. The use of a blower hinge is also recommended.

Planning Hot Work Welding

In planning or carrying out hot work, certain factors should be considered besides the obviously important hot work permit, gas test and hazard analysis. Those factors include, but are not limited to:

1. The base metal and its health effects. The MSDS on the metal is available and will address this issue.
2. The welding or burning process to be used and its special health problems, if any.
3. The location of the work: Is the work to be done in the open or in a confined space?
4. Ventilation required: Is special ventilation equipment needed?
5. Position of the work: Is the work overhead or below? Can it be positioned to allow fumes to be carried away without entering the welder's breathing zone?
6. Presence of other employees near the job: Is eye protection needed against ultraviolet radiation? Are other workers in the path of the welding fumes?
7. Cleanliness of the metal surface: Are harmful or flammable materials present beneath patches or in seams?
8. Respiratory protection: Are fume respirators adequate, or are air-supplied respirators needed? Protection must be appropriate to the circumstances and must meet the minimum requirement of the permit, but also may be upgraded.
9. Ensure adequate first aid supplies are available before beginning work. All injuries will be reported immediately.

Welding and Burning Safe Practices

Hot Work

The following information is the recommended minimum precautionary measure to be followed in performing the types of hot work listed in Table 13-1. If, in the opinion of the supervisor, additional protection is required for a particular welding or burning job, such added protective measures should be used.

Open Area includes most outside work, the mechanical shop (except vessels or partitioned areas inside the building) and well-ventilated large rooms, buildings or tanks. Confined Spaces include work areas such as inside small tanks, drums, towers, or other vessels, whether indoors or out, as well as small rooms, deep excavations, and manholes.

Table 13-1 - Welding and Burning Stick Electrode Welding

Electrode	Basic Elements	Byproducts	Precautions
AWS E-6010	Iron		A
AWS E-6011	Iron		A
AWS E-6012	Iron		A
AWS E-6013	Iron		A
AWS E-6020	Iron		A
E-316 Stainless 18-12	Chromium, Nickel, Iron	Chromium, Nickel	B
E-310 Stainless 25-20	Chromium, Nickel, Iron	Chromium, Nickel	B
e-308 Stainless 18-8	Chromium, Nickel, Iron	Chromium, Nickel	B
E-610 12% Cr	Chromium, Iron	Chromium	B
E-502 5% Cr	Chromium, Iron		A
E-605 9% Cr	Chromium, Iron	Chromium	B
E-7018 Low Hydrogen	Iron	Fluorides	C
E-8018 B-2 (1-1/4% Cr)	Chromium, Iron		A
E-9018 B-3 (2-1/4% Cr)	Chromium, Iron		A
E-8108 C-2 (3-1/2% Ni)	Nickel, Iron	Chromium	

Hot Work

Stoody 6	65% Cobalt, 45% Tungsten, 28% Chromium Cobalt	Chromium, Nickel	B
Eutectic 680	High Chromium, Nickel	Nickel	B
Inco-A	68% Nickel	Nickel	B
Inconel 182	65% Nickel	Nickel, Copper	B
Monel 190	60% Nickel, 23% Copper	Nickel	B
Ni-Rod 55	60% Nickel		B
Carpenter 20	36% Nickel, 20% Chromium		B

Precautions:

A. No special precautions are needed in open or well-ventilated areas. Work in poorly ventilated areas will require respiratory protection. Work in confined spaces may require fume filter-type respirators or supplied air. Adhere to or upgrade permit requirements. Consult the Welding Supervisor.

B. Moderate amounts of fumes generated:

1. Use exhaust blowers or air siphons to remove fumes from breathing zone in open areas.

2. Work in confined spaces will require high efficiency particulate respirators.

C. Fumes and gases generated:

1. Use exhaust blowers or air siphons to remove gases and fumes from breathing zone in open areas.

2. Work in confined spaces will require air-supplied respirator.

D. Intense arc. Large amounts of metal fumes and gases generated:

1. Provide adequate ventilation of work. Use fume exhausters to remove fumes and gases from breathing zone in open areas. Do not direct exhaust air toward other employees. Use fume filter-type respirators in open areas.

2. In confined areas, adequate ventilation must be provided and air-supplied respirator must be worn.

E. Use only in metalizing hood. If necessary to metalize in other locations, use air-supplied respirator and protect other workers in the vicinity. Do not use any lead alloys in open shop area.

Table 13-1

Tungsten Arc Welding, Gas Shielded (Heliarc)* (TIG)

Rod	Basic Elements	Harmful Byproducts	Precautions
Evedur 1010	05.6% Copper Silicon	Copper, Ozone	C
Oxweld 372 Copper	98% Copper	Copper, Ozone	C
AWS ER 4043	Aluminum, Silicon	Ozone	C
AWS ER 5356	Magnesium, Aluminum	Ozone	C
Oxweld 28	18% Chromium, 8% Nickel, Iron	Chromium, Nickel Ozone	C
Steel	Steel	Ozone	C
1-1/4% Chromium	Chromium, Iron	Ozone	C
2-1/4% Chromium	Chromium, Iron	Ozone	C

*High levels of ultraviolet light produced. Avoid eye flash with side shield goggles. Avoid skin burns with proper clothing.

C. Fumes and gases generated:

1. Use exhaust blowers or air siphons to remove gases and fumes from breathing zone in open areas.

2. Work in poorly ventilated areas will require respiratory protection.

3. Work in confined spaces will require air-supplied respirator.

Short Arc Consumable Electrode Gas Shield* (MIG)

Wire	Basic Elements	Harmful Byproducts	Precautions*
18-8 Stainless	18% Chromium, 8 % Nickel, Steel	Chromium,Nickel,Ozone	B
25-20 Stainless	25% Chromium, 20% Nickel, Steel	Chromium,Nickel,Ozone	B
Oxweld 63	98% Copper	Copper, Ozone	B
Airco 110	98% Copper	Copper, Ozone	B
Oxweld 62	91.5% Copper, Aluminum	Copper, Ozone	B
Type 316 Stainless	18% Chromium, 13% Nickel, Steel	Copper, Nickel, Ozone	B
Aluminum	Aluminum	Ozone	B
Hastelloy B	Nickel, Molybdenum	Nickel, Ozone	B
Inconel 62	Chromium, Nickel	Nickel, Ozone	B
Oxweld 65	Iron		B

*High levels of ultraviolet light produced. Avoid eye flash with side shield goggles. Avoid skin burns with proper clothing.

B. Moderate amounts of fumes generated:

1. Use exhaust blowers or air siphons to remove fumes from breathing zone in open areas.

2. Work in confined spaces or poorly ventilated areas will require high efficiency particulate respirators.

Acetylene Welding and Brazing

Wire	Basic Elements	Harmful Byproducts	Precautions
Hastelloy D	Silicon, 90% Nickel	Nickel	A
Oxweld 5M	Copper, Zinc, Tin	Copper, Zinc	B
1 Oxweld	Steel		A
Aluminum	Aluminum		A
Everdur 1010	Copper, Silicon	Copper	A
Arcosil J	56% Silver, 22% Copper	Copper, Zinc	B
	17% zinc, 5% Tin		
Oxweld 28	18% Chromium, 8% Nickel, Steel	Chromium, Nickel	B
18-8 Stainless	18% Chromium, 8% Nickel, Steel	Chromium, Nickel	B
Easy-Flo	45% Silver, 15% Copper	Copper, Cadmium	B
	25% Cadmium, 16% Zinc	Zinc	
Sil-Fos	15% silver, 80% Copper	Copper	B
	5% Phosphorus		
Oxweld 372	98% Copper	Copper	B
Colmonoy 6	65% Cobalt, 28% Chromium	Cobalt, Chromium	B
Chromium	Tungsten		
Stoodite	Iron, 30% Chromium	Chromium	B
Borod	Tungsten Carbide, Iron		

Hot Work

A. No special precautions are needed in open or well-ventilated areas. Work in confined spaces or poorly ventilated areas may require fume filter-type respirators. Consult the mechanical welding and metals supervisor.

B. Moderate amounts of fumes generated:

1. Use exhaust blowers or air siphons to remove fumes from breathing zone in open areas.
2. Work in confined spaces will require high efficiency particulate respirators.

Silver Soldering and Soldering

Rod, Wire	Basic Elements	Harmful Byproducts	Precautions*
1801 Super	Silver, Copper, Cadmium, Zinc	Copper, Cadmium, Zinc	B
1602	Silver, Copper, Tin	Copper	B
18 FC	Copper, Tin Zinc	Copper, Zinc	B
16 FC	Silver Copper, Nickel	Copper, Nickel	B
15 Phoson	Silver Copper Phosphorous	Copper	B
11 Allstate	Copper, Zinc, Nickel	Copper, Zinc, Nickel	B

B. Moderate amounts of fumes generated:

1. Use exhaust blowers or air siphons to remove fumes from breathing zone in open areas.
2. Work in confined spaces will require high efficiency particulate respirators.

Air Arc Cutting and Gouging (Carbon Rod)*

Material Worker	Basic Elements	Harmful Byproducts	Precautions*
Steel	Iron	Iron Oxides	D

Hot Work

Cast Iron	Iron	Iron Oxides	D
Monel	Copper, Nickel	Copper, Nickel	D
Stainless Steels	Chromium Nickel, Iron	Chromium, Nickel	D
Chrome Steels	Chromium, Iron	Chromium	D
Brass	Copper, Zinc	Copper, Zinc	D
Copper	Copper	Copper	D
Aluminum	Aluminum	Nickel Oxides	D
High Nickel	Nickel	Nickel Oxides	D

Housekeeping Slips Trips & Falls

1.0 PURPOSE

This requirement provides the definitions and procedures that must be used by all facilities in defining and managing housekeeping and walking-working surfaces within Company sites. Where local regulations are more stringent than this requirement, those regulations supersede this requirement.

SCOPE

This requirement applies to all Company facilities.

DEFINITIONS

Standard railing – A vertical barrier erected along exposed edges of a floor opening, wall opening, ramp, platform, or runway to prevent falls of persons.

Stairs, stairway – A series of steps leading from one level or floor to another, or leading to platforms, pits, boiler rooms, crossovers, or around machinery, tanks, and other equipment that are used more or less continuously or routinely by employees, or only occasionally by specific individuals.

Platform – A working space for persons, elevated above the surrounding floor or ground; such as a balcony or platform for the operation of machinery and equipment.

REQUIREMENTS

The workplace must be kept in a suitable clean and tidy state.

Aisle-ways must be kept free of hoses, cords, stored materials and other trip hazards.

Floors must be even and free of holes or other trip hazards.

Elevated surfaces (platforms, mezzanines, and such) must be provided with guard rails (standard railing).

Staircases must be safe.

Ladders and other equipment should be secured and not left leaning.

Housekeeping inspections must be conducted at each manufacturing, service and distribution facility at least monthly and documented.

Health and safety inspections must be conducted at each work site at least monthly.

Training must be provided to all employees at all work sites to maintain orderliness and housekeeping.

Hydroblasting

1.0 PURPOSE

The purpose of this procedure is to provide guidance on the proper operation of high-pressure hydro-blasting cleaning and cutting equipment.
In this document, the word "WILL" indicates a requirement that must be put in place to comply with Company's standards. The term "high-pressure water blasting" covers all water blasting including the use of additives or abrasive at pressures above 1,000 psi. This procedure is also applicable at lower pressures where there is a foreseeable risk of injury. Any person required to operate or maintain high-pressure water blasting equipment must be trained and has demonstrated the ability and knowledge.

Scope
This procedure covers personnel requirements, operator training, procedures and recommended equipment for the proper operation of high- pressure hydro-blasting equipment normally used in construction, maintenance, repair, cleaning and demolition work. This procedure should be considered minimum requirements. Client or local standards that are more stringent than Company's procedures take precedence and, therefore, become minimum standards at that location.
This core procedure is based upon "Best Industry Practices" and constitutes the minimum acceptable requirements that must be followed on any company or affiliate's projects unless the client/customer procedures are "equal to" or more stringent than the requirements listed here.

Responsibility
The supervisor or crew leader will act as the competent person on site. The supervisor will ensure that employees are instructed in the rules and regulations set forth in this procedure and that they abide by the procedure at all times.
The employee will abide by the rules and regulations as set forth in this policy.

Definitions

Anti-Reversal Device: a stinger assembly attached to a nozzle to prevent it from turning around inside a pipe or large tube. This assembly WILL be pipe/tube diameter or greater.

Anti-Withdrawal Device: a mechanical device that prevents the nozzle from being pulled out of the equipment being cleaned.

Automatic Pressure Regulating Valve (Unloading Valve): a valve that limits pressure at which the pump operates by releasing a preset proportion of the generated flow back to the pump suction chamber or to waste. It may be used to regulate the water pressure from the pump and is set for each operation.

Dump Control Valve: an operator-controlled valve that automatically terminates significant flow to the lance and/or nozzle assembly when released by the operator, thus relieving the operating pressure within the whole system by diverting the flow produced by the pump to atmosphere.

Fan Jet: spreads the stream of water in one place, thereby giving wide band coverage of the work piece. A typical application is for cleaning larger areas requiring less energy to remove unwanted material.

Flex Lance: a small diameter flexible high-pressure hose used in place of a rigid metal lance. It is equipped

with a nozzle that pulls the cleaning nozzle and flex lance into the tube.

Hand Guard: a hand-held device that prevents a stiff or flex lance nozzle from being pulled through the operator's hand.

High-Pressure Hose: a flexible hose that connects two components and delivers the high- pressure fluid to the gun or nozzle component. The hose will have a burst rating with a minimum of three times the intended working pressure. The high-pressure hose will be tested at one and a half times the maximum allowable working pressure quarterly. Verification of testing and inspection should be forwarded to the Equipment Yard no later than the 15th working day of the quarter.

Hydraulicing: occurs when water exiting the nozzle is trapped and creates an exit by pushing the stiff lance, flex lance, or a line mole back out of the exchanger or pipe.

Lancing/Moling: an application where a lance and nozzle combination is inserted into and retracted from the interior of a pipe or tubular product. This could be either stiff or flex lancing.

Nozzle: creates the water blast at the required velocity, flow rate, pressure, shape and distribution for a particular application. Combinations of forward and backward directed water blasts are often used to balance the thrust. Such nozzles may be referred to as tips, jets, water blasts, or orifices.

Pressurizing Pump: a unit designed to deliver high-pressure water or other fluid. This is usually based on positive displacement pistons and discharges water into a common manifold to which either flexible hoses, or high-pressure piping are attached. These pumps can be either mobile or stationary.

Pressure Gauge: a gauge indicating the pressure being developed. Gauges will have a scale range of at least 50% above the maximum working pressure of the system.

Rigid Lance: a rigid metal tube used to extend the nozzle from the end of the hose.

Shotgun Hydro-blasting Gun: a portable combination of operator's control valve, lance, and nozzle resembling a gun in layout and outline. They are typically used to clean external surfaces and the entry areas to tubes and lines. The control valve is hand-operated, generally by a squeeze action of the hand. The operator should always have control of this device.

The hand-control normally takes the form of a trigger or lever, which is provided with a guard adequate to prevent accidental operation. The trigger should be able to be immobilized by means of a safety catch or other device. The gun may be fitted with a shoulder pad or handgrips to facilitate back-thrust control. The minimum total length from the shoulder pad to the nozzle is 66 inches.

Stingers: rigid pieces of tubing or piping that are located between the nozzle and the flex lance or hose. These pieces are typically 2 - 4 feet in length.

Whip Check: a nylon strap used on all high-pressure hose connections to prevent hose whipping should the connection fail.

Personal Protective Equipment (PPE)

Personnel performing high-pressure water-cleaning shall wear an approved slicker suit or acid suit, safety glasses with side shields, hardhat with face shield, metatarsal rubber boots, and chemical-resistant gloves. Hearing protection will be worn during all hydro-blasting operations.

General Hydro-blasting

The relief system will be equipped with the following automatic relief devices on the discharge side of the pump. These relief systems must not be set higher than the lowest rated component in the system. Relief devices must be inspected and/or tested quarterly and tagged.

1) A burst disc is a thin calibrated metal disc mounted in a holder that will rupture at a pre- calculated pressure. The use of other objects to replace a burst disc in the burst disc holder is strictly forbidden and employees doing so will be subject to immediate termination. The manufacturer's tag should be attached to the disc holder or the rated pressure should be marked on the disc.

2) The pressure relief valve is a spring-loaded device designed to protect the pump from over
    a. pressure. It resets after pressure had been reduced to below the set pressure. This valve will typically prevent the rupture disc from bursting.

The railings on scaffolding need to support the weight of the lance man plus the back thrust from the shotgun that could exceed 50 pounds. A non-skid surface should be used when water and/or product pose a slipping hazard. Toe boards are also required around the standing base perimeter.

Shotgun Operations

A shotgun operation uses a hand-held shotgun to clean surfaces that cannot be practically cleaned by other means. The person operating the nozzle will have direct control of the dump system. The shotgun shall have a double dump system in place.

NOTE: The overall length of the shotgun will be 66 in. from the butt/shoulder rest to the end of the barrel without the nozzle. In cases where the shotgun must be shortened due to space limitations a deviation will be required. Management must approve the use of a shortened
barrel.

1) The point where the hose connects to the gun will be shrouded by a protective device such as a heavy duty hose to prevent injury to the operator should the hose rupture or part at the gun/hose connection. The 6 ft. of high pressure hose closest to the shotgun will be enclosed by a loose-fitting shroud to protect the operator in the event the hose develops a leak.

2) The system will never be left unattended when pressurized.

3) When more than one shotgun operation is being performed within the same area a physical barrier will be installed or adequate spacing between operators will be maintained to prevent the possibility of injury from the high-pressure water and/or flying debris.

4) Objects to be cleaned will not be held manually.

5) The minimum overall length of the shotgun should be 66 in. from the shoulder rest to the nozzle.

Line Mole Operations by Hand

A line mole operation cleans piping systems by attaching a nozzle to the end of a high-pressure hose and stinger.

1) Check all line mole equipment for faulty fittings, improper fittings, worn spots, holes, and bad threads. Any equipment with a defect should be repaired or taken out of service and tagged with and explanation of its defect. Proper tagging of line moles will prevent others from using them and the explanation will allow quicker repair.

2) Shotgun the first 24 in. of the pipe. This eliminates trying to clean the first few inches with a line mole where it is possible for the mole to jump out and injure the operator.

3) The combination of the hose connection, stinger, and nozzle must be at least pipe tube diameter or greater. The stinger prevents the mole from reversing direction in the pipe. It also functions as an indicator of nozzle placement to help prevent running the nozzle through the operator's hand while under pressure.

4) In all cases a line mole guard WILL be used to prevent accidental removal of the hose from the pipe (anti-withdrawal device). The anti-withdrawal device must be attached to the equipment being cleaned.

5) Open ended hoses of any type or pressure range WILL not be used at any time.

Flex Lancing

Flex lancing exchanger tubes is the least effective method by which to clean due to the reduced water flow and high-pressure loss. It should be used only when rigid lancing or automated equipment are not physically possible. When extracting the lance, pull straight back and do not pull at an angle because the braided metal strands that protect the operator from injury can tear.

Automated Slab Cleaning Equipment

Shell Side Cleaning Unit

1. Perform a pre-trip shell-side unit prior to mobilization.

2. Mobilize shell-side cleaning unit to designated cleaning location. c) Obtain all required permitting for cleaning location.

3. Perform JSA with all personnel assigned to your crew. JSA should not only include High
4. Pressure Hydro-blasting but also any clean up or decontamination of slab area or equipment.

5. Spot unit on slab and unhook unit from transport truck.

6. Remove all tie downs, chain and binders and any transit blocks from the unit. Store all tie
7. downs, binders etc. within job boxes out of weather until job completion. g) Check all fluids prior to start up.

8. Start the hydraulic power pack. Pre-set pressure should be 2,000 psi. Do not adjust without
9. calling a mechanic.

10. Drop all four outriggers on the unit and check to ensure they are properly positioned with all legs on pads.

11. Unload the control panel from the trailer.

12. Connect all hydraulic lines between the control stand and the shell-side unit.

13. Connect the High Pressure water hoses from the hydro-blasting unit to the front of the shell-side unit.

14. Remove rollers from shell-side unit via crane/forklift support.

15. Spot rollers; the drive rollers must be in the front and the idler rollers in the rear.

16. Rollers must be level (utilize proper cribbing as needed) and square rollers with each other upon set-up.

17. Connect the hydraulic lines to the front drive rollers and test rollers for rotation.

18. Check all bearings, chain lubrication and grease points prior to start up and at the end of each shift.

19. Un-rack boom and check for proper operation.

20. As tube bundle/s arrives on slab pre-inspect for damage prior to placement on rollers.
21. Should there be any visible damage to the tube bundle notify your coordinator immediately.

22. Swing the boom out of the way; load the tube bundle onto the rollers, ensuring the riggers
23. spot the bundle baffles to the center of the drive and idler rollers.

24. Position bundle in a manner that water stream will contact tube bundle between tubes to remove product, note any lugs or baffles that will obstruct the tube bundles rotation or areas that may possibly cause the tube bundle to “walk” (travel) on the rollers.

25. Swing the boom so that the spin-jet arms are out over the tube bundle.

26. Ensure that the High Pressure water on/off lever on the control stand is in the “OFF”
27. position.

28. Ensure all non-essential personnel are out of the area.

29. Engage the Hydro-blasting unit (water should start spraying onto the ground through the dump valve near the front of the shell-side unit and from the two nozzles on the spin-jet head. Allow one minute for flushing purposes.

30. From the control stand, turn on the High Pressure water and spin jet rotation.

31. Have the supervisor / operator pressurize the Hydro-blasting unit and begin traversing the traveler base up and down the length of the unit.

32. Have the supervisor / operator pressurize the Hydro-blasting unit and begin traversing the traveler base up and down the length of the unit.

33. Upon cleaning of first ¼ of tube bundle rotate tube bundle in ¼ turn increments and repeat process until tube bundle is clean of all product. Note: Full attention should be given to the movement of the tube bundle to ensure its stability while in motion. Should travel occur or baffles, tube sheets, floating head etc. limit the movement of the tube bundle notify your supervisor and assist riggers along with crane support reposition the tube bundle.

34. Should ID of tubes require cleaning have riggers with crane support relocate tube bundle to area utilized for tube cleaning prior to inspection.

35. Have your supervisor/operator call for a clean inspection of tube bundle, note all necessary conditions or special requirements on your Cleanliness sign-off sheets prior to inspection sign-off.

36. Upon finishing of tube bundle cleaning de-pressurize hydro-blasting unit and shut down cleaning process.

37. Swing the boom out of the area and roll bundle to the top position (this should be written or stamped on the tube sheet).

38. De-contamination of slab area and of contaminated equipment should be performed at this time.
39. Please make any changes needed to your JSA to reflect the de-con process.

40. De-contamination of slab or equipment will be performed with hot water washers or facility utilities
41. ONLY. Clean unit in operating state. (Boom not racked up).

42. The use of manual tools and/or motorized equipment if provided and approved by your coordinator is acceptable for the removal of solids from the slab area.

43. The use of any type of hydro-blasting equipment to de-con slab area or equipment is not permitted unless approved and permitted for de-con by your coordinator to do so.

44. Reverse process of mobilization and set-up of equipment.

45. Remove equipment from slab and ensure the slabs cleanliness is acceptable with your coordinator.

46. Return permitting to coordinator and have M&O signed.

47. Demobilize equipment and perform Post-trip inspection upon arrival on PNT Consulting LLC yard.

Automated Lance Machine

1. Pre-trip automated lance machine (ALM) unit prior to mobilization assuring the unit is secured on the trailer properly (no chains on hydraulic lines, cab / carriage assembly is in full down position etc.).

2. Mobilize ALM cleaning unit to designated cleaning location. c) Obtain all required permitting for cleaning location.

3. Perform JSA with all personnel assigned to your crew. JSA should not only include High
4. Pressure Hydro-blasting but also any clean up or de-con of slab area or equipment.

5. Remove all tie downs, chain and binders and any transit blocks from the ALM unit. Store all tie downs, binders etc. within job boxes out of weather until job completion.

6. Remove ALM unit from transport trailer with crane support and spot on slab.

7. Remove bundle rollers (drive and idler) from transport truck / trailer and spot on slab.

8. Connect hydraulic hoses from power pack to the drive roller.

9. Check all fluid levels, chain lubrication, bearings and grease as needed prior to start and at each shift change.

10. Start the hydraulic power pack on the ALM. Pre-set pressure should be 2,000 psi. Do not adjust without calling mechanic.

11. Raise cab assembly and pin / bolt in place checking to ensure the unit is properly positioned.

12. Check for proper hydraulic operation on all functions.

13. Position hydraulic legs on outrigger pads and ensure the ALM unit is level.

14. Connect high-pressure water supply line from hydro-blasting unit to the ALM.

15. Flush ALM system with hydro-blasting unit engaged at zero pressure for a minimum of one minute to ensure there is no plugged within the system.

16. Place nozzles on lance rods and tighten, making sure to utilize anti-galling product on threads.

Hydroblasting

17. Engage hydro-blasting unit at zero pressure to ensure all nozzle orifices are open.

18. Position bundle on rollers and set snorkels on ALM within one to two inches of bundle tube sheet.

19. Enter operating cab of ALM and position nozzles into tubes approximately one inch.

20. Have hydro-blasting unit operator pressure ALM to desired cleaning pressure (up to
21. 8,000psig).

22. Run lance rods through tubes under pressure and return under pressure moving to the next tubes until cleaning of tubes has been completed. Bundle may have to be rotated with the use of the rollers to gain access to all tubes within the bundle. Prior to bundle rotation ensure there are no protruding bolts etc. that would interfere with its rotation.

23. Upon finishing of tube cleaning have hydro-blasting unit operator de-pressurize hydro-
24. blasting unit and shut down cleaning process.

25. Reposition the lance indexer to one side to ensure the equipment will not be damaged while changing the bundles out.

26. Have your supervisor / operator call for a clean inspection of tube bundle, note all necessary conditions or special requirements on your Cleanliness sign-off sheets prior to inspection sign-off.

27. Repeating cleaning process until all required bundles have been cleaned.

28. De-contamination of slab area and of contaminated equipment should be performed at this time.
29. Please make any changes needed to your JSA to reflect the de-con process.

30. De-contamination of slab or equipment will be performed with hot water washers or facility utilities
31. ONLY. Clean unit in operating state.

32. The use of manual tools and/or motorized equipment if provided and approved by your coordinator is acceptable for the removal of solids from the slab area.

33. The use of any type of hydro-blasting equipment to de-con slab area or equipment is not permitted unless approved and permitted for de-con by your coordinator to do so.

34. Reverse process of mobilization and set-up of equipment.

35. Remove equipment from slab and ensure the slabs cleanliness is acceptable with your coordinator.

36. Return permitting to coordinator and have Quality Control Manager signed.

37. Demobilize equipment and perform Post-trip inspection upon arrival on PNT Consulting LLC yard.

38. Decontamination process of the ALM will result in lubrication (grease, chain lube etc.) removal from the equipment. The ALM unit must be re-lubricated upon arrival at the PNT Consulting LLC yard or prior to exiting the facility.

Stoneage Lance Machine

1. Pre-trip stoneage lance machine (SLM) unit prior to mobilization. b) Mobilize SLM cleaning unit to designated cleaning location.
2. Obtain all required permitting for cleaning location.
3. Perform JSA with all personnel assigned to your crew. JSA should not only include High Pressure Hydro-blasting but also any clean up or de-con of slab area or equipment.
4. Remove all tie downs, chain and binders and any transit blocks from the SLM unit. Store all tie downs, binders etc. within job boxes out of weather until job completion.
5. Remove SLM unit from transport trailer and spot on slab.
6. Remove bundle rollers from transport truck / trailer and spot on slab if required.
7. Position the SLM on the indexer and hang rear of SLM on the a-frame utilizing the chain fall.
8. Connect all air hoses to the drive motors and control stand.
9. Connect air supply facility utilities or air compressor to the control stand. Check oil levels in oilers, refill as needed throughout job process.
10. Check for proper air operation on all functions of the SLM.
11. Check hand cranks on indexer for proper operation.
12. Connect high-pressure water supply line and foot control valve from hydro-blasting unit to the SLM.
13. Flush SLM system with hydro-blasting unit engaged at zero pressure for a minimum of one minute to ensure there is no pluggage within the system.
14. Place nozzles on lance rods and tighten, making sure to utilize anti-galling product on threads.
15. Engage hydro-blasting unit at zero pressure to ensure all nozzle orifices are open.
16. Position bundle on rollers / cribbing and set snorkels of SLM within one to two inches of bundle tube sheet.
17. Insert tube lances into bundle one to two inches.
18. Have hydro-blasting unit operator pressure SLM to desired cleaning pressure (up to 10,000psig).

19. Run lance rods through tubes under pressure and return under pressure moving to the next tubes utilizing the indexer and a-frame with chain-fall until cleaning of tubes has been completed.

20. Upon finishing of tube cleaning have hydro-blasting unit operator de-pressurize hydro-
21. blasting unit and shut down cleaning process.

22. Have your supervisor / operator call for a clean inspection of tube bundle, note all necessary conditions or special requirements on your Cleanliness sign-off sheets prior to inspection sign-off.

23. Repeating cleaning process until all required bundles have been cleaned.

24. De-contamination of slab area and of contaminated equipment should be performed at this time.
25. Please make any changes needed to your JSA to reflect the de-con process.

26. De-contamination of slab or equipment will be performed with hot water washers or facility utilities
27. ONLY.

28. The use of manual tools and/or motorized equipment if provided and approved by your coordinator is acceptable for the removal of solids from the slab area.

29. The use of any type of hydro-blasting equipment to de-contaminated slab area or equipment is not permitted unless approved and permitted for de-con by your coordinator to do so.

30. Reverse process of mobilization and set-up of equipment.

31. Remove equipment from slab and ensure the slabs cleanliness is acceptable with your coordinator.

32. Return permitting to coordinator and have Quality Control Manager signed.

33. Demobilize equipment and perform Post-trip inspection upon arrival on PNT Consulting LLC yard.

34. Decontamination process of the SLM will result in lubrication (grease, chain lube etc.) removal from the equipment. The SLM unit must be re-lubricated upon arrival at the PNT Consulting LLC yard or prior to exiting the facility. All air motors will be tested and lubricated for storage upon arrival at the PNT Consulting LLC yard.

Hydro-blasting - 20,000 Psi and Below

Personnel
All personnel involved in high-pressure water-cleaning for PNT Consulting LLC will be at least 18 years of age.

Personnel engaged in high-pressure water-cleaning operations will satisfactorily complete a training course provided by PNT Consulting LLC that includes safety considerations and equipment operation before any hydro-blasting.

Hydroblasting

Pre-Operational Procedures

1. Planning - Each job should be pre-planned and comply with the requirements of this standard. Personnel familiar with the equipment to be cleaned or the material to be cut and the work environment should meet with the personnel that will be doing the work and outline potential hazards of the work area, environmental concerns, safety standards and emergency aid procedures. The MSDS for the product being removed should be reviewed. The potential hazards and PPE requirement must be communicated to the crew.

2. Checklist - A corporate-supplied checklist should be used to ensure that proper procedures
3. and equipment selection are followed.

4. Area Limits - Area limits applicable to the cutting or cleaning operations will be defined and the team will mark these limits by barriers and notices to warn against access to other personnel. Suitable barriers will be an approved form of hazard warning, roper or tape, as a minimum.

5. Notices should state “DANGER - Keep Clear, High Pressure Water blasting” or other suitable wording.

6. Fittings - All fittings will be cleaned and lubricated before installing in the system. Be sure all fittings, hoses, and nozzles meet the MAWP requirements and are correct for the job being performed.

7. Pre-flushing - The system will be completely flushed with sufficient water to remove any contaminants before installing the nozzle.

8. Static Hazard - The use of de-ionized (de-mineralized) water should be avoided. If unavoidable, the lance will be electrically grounded. Static charges can be created by the stream after leaving the nozzle, causing a shock hazard to the operator. The pumping unit must be grounded before the engine is started.

Start-Up Procedures

1. Follow proper area entry and work permit procedures for the plant in which you are working, including job and hazard information.

2. Conduct tailgate safety meeting and complete a Job Safety Analysis (JSA) with the work crew
3. making sure to cover job tasks to be performed for the current activities and have all crewmembers sign the JSA. Should any condition change during the course of the assigned work scope or should you change to other work scopes the Tailgate safety meeting and the JSA should be modified or changed to reflect the new scope of work.

4. Perform maintenance check on unit using appropriate maintenance check sheet as a guide. d) Barricade area and pump and post appropriate signs.

5. Check and clean water filter.

6. Hook up to adequate, approved water supply as shown by the customer.
7. Turn on water.
8. Flush lines.
9. Turn off water.
10. Hook up hand or foot guns without nozzle.
11. Start engine allowing appropriate warm-up period.
12. Engage clutch with engine at idle speed.
13. Flush hand or foot guns.
14. Disengage clutch.
15. Add correct nozzle.
16. Turn on water.
17. Start engine.
18. Have crew member engage gun while in direct view of the pump operator, engage clutch and adjust slowly to achieve 3,000 psi and have crew member test operation of dump valves.
19. Adjust engine throttle slowly to achieve the desired pressure to be used and have the crewmember on the gun test the operation of the dump valves again.
20. If the RPM of the engine is not operating within the correct operating range (typically 2,100
21. RPM), another nozzle with larger or more jets should be selected and the same procedure followed beginning with step 13.
22. This process may have to be followed several times in some cases to operate at the desired pressure and RPM.

Operation

1. Startup - The pump unit will not be started and brought up to pressure unless team members are in their designated position, the nozzle is held in or directed at the work piece, and the lance or gun securely held.
2. Adjustments - Apart from operational procedures, no attempt will be made to adjust any nut, hose connection, fitting, etc., while the system is under pressure. The pressure in the line must be discharged prior to making any such adjustment.
3. Equipment Malfunction - If for any reason the water flow does not shut off when the trigger or foot

pedal is released, work will cease until the item has been serviced, repaired, or changed by properly trained personnel.

4. Reaction Force - The operator should be allowed to experience the reaction force of the water blast progressively until the required operating pressure is reached. The lowest pressure should be used compatible with the work to be done. The pressure will not be adjusted without the operator's awareness.

5. Effect of Line Pulses - Operators should be made aware of the reactive effect of pressure in the line that can transmit a severe jolt to the operator when the dump valve is operated. To minimize this effect, total hose lengths should be kept as short as possible.

6. Operator Positioning - While operating, the team members will be safely positioned and if any person enters, the working area, hydro-blasting should be stopped.

7. Work Stoppage - Work will stop:

- In the event that leaks or damage becomes apparent.
- If any person becomes aware of any change in conditions or any new or existing hazards.
- If plant or work alarms are sounded. A review of the JSA must be conducted after stopping for these reasons.
- If any of the safety standards in this document are not being followed. v. If equipment malfunction
- If unauthorized personnel enter the barricaded area

Hydro-blasting - Up To 40,000 Psi

Operating Safely

1. Warn all personnel in the area before starting the engine or operating the high-pressure water system.

2. Keep personnel or vehicles away from the high-pressure water line to prevent movement of the line and loss of operator control of the cutting device.

3. Stop operating immediately and shut off engine if there is failure in the engine, hydraulic
4. system or high-pressure water system.

CAUTION: Use caution when operating the cutting attachments to avoid hose, cords or other things that could cause the operator to slip.

High Pressure Water Connectors and Fittings

WARNING: Always use hose and tubing rated for a minimum of 40,000 psi working pressure. All fittings

and adapters must be of the high-pressure design.

IMPORTANT: To prevent damage, protect high-pressure hoses if they will be in an area that may be used by other vehicles or equipment.

IMPORTANT: USE anti-seize compound on all threaded high-pressure fittings and connectors.

IMPORTANT: A loose connection will wear and eventually fail.

IMPORTANT: Prevent contamination of high-pressure water lines from foreign objects or debris. Keep hose and pipe ends covered when disconnected.

Hydraulic Pressure Valve and Gauge

WARNING: DO NOT operate the hydraulic oil pump at more than 3,500-psi pressure.

NOTE: The ratio of hydraulic pressure is 12:1. Example: 1,000-psi hydraulic pressure will give 12,000-psi water pressure. 3,000-psi hydraulic pressure will give 36,000 psi of water pressure. Use the minimum pressure required to cut the material you are removing.

Safety Equipment-Required

- Approved hard hat
- Slicker suit
- Safety glasses w/side shields d) Face shield
- Rubber gloves
- Ear plugs
- Meta-Tarsal boots

Water Supply

IMPORTANT: Do not operate the intensifiers without adequate water supply. Filters must be used. Water cleanliness will greatly affect the life of the inlet water filters.

Starting the Engine

IMPORTANT: It is important to remember that the UHP unit is equipped with automatic shutdown circuits. The engine or pumping system will automatically shut down immediately under the following conditions:

- Engine oil pressure too low.
- Engine coolant temperature too high
- Hydraulic oil level too low.
- Loss of hydraulic oil pressure.
- Electrical power loss.
- Incoming water pressure low.

Indicator lights on the control panel will show the possible cause of the shutdown. If the engine or pumping

system shuts down, find the problem that caused the shut down and correct it before continuing operation.

Maintenance and Service

- You must have instructions before doing any maintenance or repairs.
- Do not modify equipment or add attachments not approved by the manufacturer.
- Check for correct operation after making any repairs or adjustments.

Filling Fuel Tank

CAUTION: Do not fill tank to capacity. Leave space in the tank for vapor expansion if the temperature should change. A filled tank could overflow if exposed to a rise in temperature, such as direct sunlight.

WARNING: Add fuel only in an area that has free movement of air and no open flames or sparks. No smoking.

Fill tank at the end of each day of operation to prevent condensation.

Moving Parts
Keep guards and covers in place at all times when operating the machine. Stop the engine before removing guards and shields.

Keep clothing and body parts away from moving parts.

Air Tank
Relieve air pressure before working on any air related parts.

Care and Maintenance of Equipment

1. Filters and Strainers - All water filters and strainers should be checked at regular intervals, dependent upon the supply water conditions, and in accordance with pump manufacturer's recommendation.
2. Foot Control Valves - All foot control valves will be checked and cleaned as needed and the foot mechanism and guard given a thorough visual examination to ensure correct operation. An adequate guard will be fitted to prevent accidental operation and the base plate should be sufficient to ensure stability while in use.
3. Hose Assemblies - All hose assemblies will be inspected prior to use as follows:
    - Correct pressure rating and size

- Free from external damage (i.e. broken wires, excessive braids showing).
- All end fittings and couplings are in good order and satisfy pressure rating for the unit operating pressure.

4. Hydro-blasting Guns and Lances - Hydro-blasting guns and lances will be checked daily arid the trigger mechanism and guard given a thorough examination to ensure correct operation. All high-pressure connections should be observed during operation of the equipment at pressure. If a leak is observed, the pump must be shut down and the connection repaired or replaced before further operation.

5. Nozzles - During the start-up prior to the operation, the nozzle will be removed from the lance and the system flushed thoroughly to remove air and foreign particles.

6. Pump Unit - The pump unit will be maintained in accordance with maintenance guidelines.

7. Tools - The correct size tools must be used when maintaining or assembling hydro-blasting systems. The use of adjustable tools having serrated gripping jaws, for example pipe wrenches that can damage equipment are not recommended particularly on the crimped portion of a hose fitting.

8. Trailers - Trailer-mounted units will be checked prior to each use: examine tires, braking systems, jacking points, towing hitch, lights, safety chains, structural damage, and general cleanliness, according to DOT pre-post trip guidelines. Vehicles fit for the purpose should only tow the units.

Training Requirements

All employees who perform hydro-blasting shall be trained on the equipment to be used and the hazards associated with them. Training shall include the following:

1. The proper method of connecting hoses including arrangements without kinks, protection from excessive wear, and proper tools to use on couplings and fittings.

2. Proper inspection of equipment and safety components.

3. Proper use of safety features on pumps, dumps and anti-withdrawal devices.

4. Limitations of pumps and hose.

5. The proper stance for stable footing and how to use the various devices to hand-lance, operate a shotgun, and line mole operation will be demonstrated. The trainee, under close supervision, will use the various devices while the system is slowly pressurized.

A written and hands-on exam will be given to ensure comprehension.

First Aid

In the event a person is injured by the impact of a water blast, the injury may appear insignificant and give little indication of the extent of the injury beneath the skin and the damage to deeper tissues. Large quantities of water may have punctured the skin, tissue, and organs through a very small hose that may not even bleed. Immediate hospital attention is required and the medical staff must be informed of the cause of the injury. Ensure that the physician takes into account when making the diagnosis that unusual infections with aerobic microorganisms occurring at lower temperatures have been reported. These may be gram-negative pathogens such as those that are found in sewage. Bacterial swabs and blood cultures may therefore be helpful.

Immediate First Aid - Where medical examination is not immediately possible in remote situations, first-aid measures should be confined to dressing the wound and observing the patient closely until medical examination has been arranged.

Reporting - If any person or equipment is accidentally struck by the water blast, it must be reported to the supervisor or crew leader.

References

ASTM E1575-080- Standard Practice for Pressure Water Cleaning & Cutting

Incident Investigation Program

1.0 PURPOSE

To provide employees with a consistent method of investigating all incidents. Incidents are defined as: all injuries and illnesses, near misses, motor vehicle and equipment damage incidents, non-occupational incidents, property damage and environmental incidents. This program when followed ensures accurate reporting and recording of all incidents to prevent future recurrence.

Policy:

Employees are required to report all incidents immediately to their supervisor regardless of severity or size of incident.

Procedures:

Employee Training on the Job

1. Encourage employees to report all work-related injuries/illnesses no matter how small or insignificant they may seem. It is our goal to keep the small things small.
2. Point out where the name and address of the company doctor is posted.
3. Point out where the names and phone numbers of the responsible supervisors to whom injuries should be reported after hours are posted.
4. Explain how employees are to report injuries that occur off-the-job to their supervisor in addition to symptoms related to on-the-job or off-the-job injuries/illnesses that develop after hours.

Handling Accident/Illness Occurring on the Job

1. Primary responsibility for the Supervisor is to get appropriate medical care for the employees as soon as possible. Know ahead of time what you would do for a serious accident, minor accident, or a near miss incident.
2. Individual states have their own death or serious injury reporting requirements. Comply with the reporting requirements of the state in which an incident occurs. In California, employer's are required to report immediately by telephone or telegraph to the nearest District Office of the Division of Occupational Safety and Health any serious injury, illness, or death of an employee occurring in a place of employment or in connection with any employment. Immediately means as soon as practically possible but not longer than 8 hours after the employer knows or with diligent inquiry would have known of the death or serious injury or

illness. If the employer can demonstrate that exigent circumstances exist, the time frame for the report may be made no longer than 24 hours after the incident.

Serious Injuries Where Life and Limb is Endangered

1. Avoid any further injury by improper moving and handling. Use an ambulance to transport seriously injured employees.
2. Typically what will occur is that the emergency room doctors will treat and either refer the patient to the company doctor and/or has the company doctor admit the employee to the hospital. In some locations, the company doctor may choose to go to the emergency room and treat the injury himself.
3. Do a careful scene investigation. Remember that all serious accidents are subject to inspection by government agencies.
4. Notify your superintendent by phone as soon as possible.
5. Report to OSHA.

Minor Injuries Requiring Medical Treatment

1. If no on-site first aid station is provided, take the employee, or send him/her with another employee (unless the wounds are very minor), to the company doctor's office. After hours go to the predetermined hospital emergency room.
2. Obtain a "DOCTOR'S REPORT OF INDUSTRIAL INJURY/ILLNESS". This form will come back with his/her work status filled out and becomes his/her work release. Each follow-up visit requires a new form filled out.
3. Do a thorough scene investigation.

Minor Injuries Not Requiring Medical Attention

1. Listen to the employee carefully. Be sympathetic, concerned, fair, and accurate.
2. Investigate the incident! This may be a symptom of something very wrong in the work place, which, if caught early, could avoid a serious injury.

3. If you have suspicions, or are not completely satisfied, you have every right and a responsibility to send an employee to the Company Doctor. (Be sure to provide transportation to and from the doctor and on company time.)

Phases of an Investigation

Phase I - Communicating the Incident: As soon as you learn of an incident, you need to communicate up the chain of command.

Phase II - Planning: Before rushing into an investigation, a plan is necessary (see "Investigation Checklist and Plan" at the end of this section). Some thought should be given to the scope and content of the investigation. The planning process may take a few minutes for a small, routine incident. It may take several hours to weeks for a major crisis. Take as much time as is necessary to prepare for a thorough investigation. Keep in mind, however, that speed is important for getting all the information.

Phase III - Conducting: Working from the plan, the next step is to gather all the information. This means interviewing people, and gathering documents and evidence. The most important point is to be thorough. It also is important to work quickly and efficiently.

Phase IV - Reporting: In this phase, all of the information from the investigation is organized, analyzed, and reduced to a comprehensive report. The written report will be the record of the investigation. The written report and all materials should be submitted up the chain of command.

Phase V - Analysis and Conclusion: The report is reviewed and decisions are made as to cause, responsibility, correction, future prevention, and impact on policies and procedures.

Performing Incident Investigations

1. View the location and take pictures if possible. If no camera is available or client won't allow pictures to be taken, then draw a picture of the scene.

2. Interview all witnesses.

    a. Interview as soon after the incident as possible. The longer the time span between the incident and the interview, the less clear is the recollection.

    b. When interviewing people, maintain an open mind and self control. The interviewer's responsibility is to act like a reporter, and simply record what is said rather to assert an opinion or attempt to influence the witness.

c. Choose a place to conduct the interview free from distractions and in private. It is preferable to interview witnesses one at a time.

d. Know as much about the basic facts as you can before you begin the interviews.

e. Take notes of all interviews. Have the witnesses write a statement in their own words and sign the document.

f. Do not rush, and ask open ended questions. Remember to use "Who, What, Where, When, Why". Never end an interview without asking the witness "Is there anything else"?

3. Interview the injured employee. Use the same techniques as above for witnesses.

Investigation Checklist and Plan

Potential Witnesses (list on separate sheet):	**Identified**	**Interviewed**
Employees involved in the incident		
Employees close to the incident		
Employees involved with events prior to the incident		
Employees involved with events after the incident		
Employees of other contractors		
Client Employees		
Other:		

Documents:	**Relevant**	**Obtained**		**Relevant**	**Obtained**
Job Hazard Analysis			Personnel File		
Tailgate/Toolbox Talks			Safety Log		
Other Safety Meetings			Contract(s)		
Audits			Medical Reports		
Inspections			Doctor's First Report		
Work Order/Job Order			Training Records		
Permit			Other		
Time Sheets					
Other Evidence:					
Tools			Photographs		
Equipment			Drawings		
PPE/Clothing			Blue Prints		

Incident Report

Attention: This form contains information relating to employee health and must be used in a manner that protects the confidentiality of employees to the extent possible while the information is being used for occupational safety and health purposes.

Employee	Male / Female
Phone #	Date hired
Street Address	Date of incident
City	Time of incident
State / Zip	Time employee began work
Date of birth	Supervisor
Site/Location (facility name) and Unit or Project:	
Name of physician or other health care professional:	
If treatment was given away from the worksite, where was it given?	
Was emp. treated in an emergency room?	Yes or No
Was emp. hospitalized overnight as an in-patient?	Yes or No

Incident Investigation Program

Incident Classification:

First Aid		Medical Non-Disabling		Equipment Damage	
Near Miss		Restricted Work Case		Fire or Release	
Motor Vehicle Accident		Lost Time Case		Non-Occupational	

LOSS

Apparent nature and extent of injury, damage or potential loss?

INCIDENT

Description of the incident (who, what, how, when, why and what was the employee doing just before the incident occurred)?

PREVENTION

Immediate action and future action to prevent recurrence?

CORRECTIVE ACTIONS List who is responsible for ensuring corrective actions have been addressed and when they will be completed?

Prepared By:	Title:	Date:
Report Routed To?		

Job Competency

1.0 PURPOSE

The purpose of this policy is to establish general job competency requirements for all employees.

Assignment of Responsibilities

Safety Coordinator will be responsible for:

- Identifying, updating and monitoring minimum qualification requirements, job titles and training documentation
- Supplying training reports to clients and Company Management.
- Company Management will be responsible for:
- Ensuring all employees assigned to their project meet job competency requirements and complete training identified in the training matrix.
- Ensuring that any work that may endanger an employee must be completed by an employee who is competent to do the work.
- Ensuring all employees have sufficient experience to safely perform work without supervision or with only a minimal degree of supervision.
- All employees will be responsible for:
- Attending and following requirements of safety and health management training.

Definition

Competence is a combination of knowledge, understanding and skill, and the appropriate level of competence cannot be acquired simply by attending a training session. The understanding and skill are acquired by experience. For individuals involved in exposure to HSE hazards and risks experience and training are essential.

The following components are to be considered for each worksite's delivery team for competency assurance:

- Experience
- Level of Knowledge
- Capability to Perform

COMPANY's view of competency assurance involves the continuous assessment of training and development needs against a person's responsibilities, abilities and critical activities. This process enables the continuous improvement loop that feeds back into training and development activities that ensure competency assurance is an ongoing career cycle process.

1. Job Description Identified → Candidate Selection and Hiring Process
(Reference and Background Check, Drug Screen, Physical Assessment) →
Person Assessed and Hired for Open Position
2. Experience, Qualifications Assessed for Initial Training ↔ Initial Induction
Training Completion
3. Further Training Required? If no → Ready for Work → On the Job Training
→ Competency Continually Assessed

4. Annual Performance Appraisal → Ready to Promote? → Employee Promoted → Further Training Required?

Competency is verified before employees are permitted to perform tasks independently. A competent person (supervisor, lead hand, instructor, etc.) must verify that an employee is competent to perform their roles and responsibilities before being allowed to work independently. If there is a site Short Service Employee (SSE) program established the new or transferred employee will fall under the SSE requirements as well.

Identification of Documentation

Documentation is obtained from employees to demonstrate they meet the qualifications of their job. Based on the job description requirements documentation may include educational, certifications, licenses, prior acceptable training course completion, etc. Documentation is reviewed and confirmed as actual during the employee hiring process.

Identification of Positions

An organizational chart and list of job titles has been established by Company and Associates. Based on the positions and their exposure to risk their required training is entered into each worksite's training matrix. Job descriptions are prepared for each job title.

Identification of Qualifications

Minimum qualification requirements for each job title have been established by COMPANY Management. Qualifications may include a combination of education, certifications and work experience. Safety training completion for the indicated job title is required before full qualifications are met to allow an employee to begin work.

Identification of Training and Competency Needs

Employees (new or transferred) are provided job specific training related to their roles and responsibilities and trained on the tasks they perform on a regular basis. Training is identified in our training matrix which specifies safety and health training needs by job title. Our training matrix is updated based on changing risks.

Training Records

All training records are maintained on site either by the COMPANY Safety Coordinator or HR Manager or their designee.

Delivery of Induction, Transfer and Refresher Training

Employees receive initial induction training. No work by any employee is allowed to begin until the orientation is completed. Training requirements are tracked by the COMPANY Safety Coordinator and formal training sessions are conducted either on or off site by the Safety Coordinator or competent/qualified instructor for the required subject matter. Applicable training will be completed annually or according to certification requirements.

Supervisor Safety Management Training

Supervisors and managers receive annual, documented safety management system training.

Training Documentation

All training must be documented with the date, employee name, employee signature, instructor's name, instructor's signature and title of course. Each new employee shall receive an orientation prior to beginning any work.

Job Hazard Analysis

1.0 PURPOSE

The purpose of the Hazard Analysis is to provide a method for a supervisor and his/her crew to inspect an upcoming job, identify potential hazards related to that job, and to arrive at agreement on the development of a Safe Work Plan for completing their assignment.

POLICY:

Once the client/owner has issued a permit, it is each PNT Consulting LLC employee's responsibility to ensure that the Safe Work Plan for the work he/she is about to do is properly developed. After receiving a valid work permit from the client/owner and before starting a job, each crew shall review the permit requirements and perform a thorough Hazard Analysis. The Hazard Analysis process serves as PNT Consulting LLC Safe Work Plan. As such, by completing the process and signing on the back of the form, employees are indicating that they are prepared to accomplish the assigned task efficiently and safely.

In the event conditions change, the Hazard Analysis Form must be updated. Potential hazards, including those specific to the task and those general to the work area, must be discussed and a plan formulated to eliminate or minimize identified hazards. Each person on the crew must understand his/her role relating to the tasks at hand. When a new worker is assigned to a job in progress, the Hazard Analysis must be reviewed with this person and he/she must sign the form before beginning work.

PROCEDURE:

1. Once the client/owner work permit has been issued, the assigned crew shall conduct a thorough Hazard Analysis session at the job site, which includes, but is not limited to:

a) Walking the job and reviewing all elements of the assignment. The supervisor shall identify all equipment that is to be worked on.

b) Identifying existing and/or potential hazards and take appropriate action to eliminate or minimize identified hazards; reaching agreement on the safest plan to complete the assigned task. Each person on the crew must thoroughly understand their role in the upcoming tasks.

c) Evaluating PPE requirements and upgrading permit required PPE or providing additional PPE whenever necessary to provide maximum level of employee protection.

d) Ensuring that all workers know and are properly trained for their assignment(s).

e) Posting the completed form(s) along with the work permit in a conspicuous place in the work area. In the event it is not possible to post the form(s), they shall be kept readily available at the job site. The forms shall be kept in a manner that protects them from weather damage.

Job Hazard Analysis

2. Whenever possible the supervisor shall be involved in the Hazard Analysis Session. However, there are times when this is not possible. Should the supervisor find that he/she will not be available, he/she shall assign a competent person to lead the session. As soon as practical following the beginning of a job, the supervisor shall review all Hazard Analysis Forms of crews assigned to him/her and sign the back of the form in the section provided.

GENERAL INSTRUCTIONS:

- Print and make sure the form is legible/readable. The only place you do not print required information is when you place your signature on the back of the form.
- Involve the entire crew in the process. The more eyes and experience used to identify hazards, the better.
- Whenever possible, the completed Hazard Analysis should be reviewed for proper completion and signed by the designated lead person, foreman, supervisor or Safety dept. representative **before** the work is started. If this is not possible, the form should be reviewed as soon as practical.
- When the form (s) is completed, it must be posted & readily available at the job site.

Front of Hazard Analysis Form:

Description of job – The first step of hazard analysis is to accurately describe the work to be performed. This will provide the basis for the rest of the process. At the top of the form, provide a brief, but specific description of the job you will perform.

Date and Time – Enter the date the work will be performed and the time you started the Hazard Analysis process.

Location – Enter the name of the facility where the work will be performed. For example:

Supervisor – Enter the name of the immediate foreman or supervisor.

Client Contact – Enter the name of the client contact person for that job.

Crew – Clearly **print** the name(s) of each person that will be working on the job. This may include non- PNT Consulting LLC employees, such as other contractors or client personnel working with you.

Job Hazard Analysis

Unit – Enter the name of the unit where the work will be performed. For example:

Equipment – Enter the number or name of the equipment you will be working on. Be as specific as possible. Make sure that you are preparing to work on the right equipment. If there is no number or name for the equipment, enter the number or name of the equipment it is connected to. For example:

Product – Enter the name of the product or material that is present or that was present when the equipment/line was in service. In addition, if the equipment/line was flushed or cleaned before the work is performed, indicate that on the form.

Permit Numbers – Enter the number from the client permit(s) in the appropriate section. Some jobs may have multiple permits.

Location of – (Enter the location of the nearest):

Telephone – This is the telephone that would be used to report an emergency (*i.e. – operators shack)*. If there is no telephone in the immediate area, indicate how you would report an emergency (*i.e. – radio, cell phone)*.

Emergency Phone No.(s) – Enter the phone number(s)/radio channel(s) for reporting emergencies at that location

Fire Extinguisher – Enter the location of the nearest portable fire extinguisher. Be sure to check the extinguisher and verify that it is fully charged, is operational, and has been inspected within the past year. Report any extinguisher that appears to be inoperable, damaged, discharged or in need of service.

Eyewash/Safety Shower – Enter the location of the nearest eyewash/safety shower. If it is alarmed, check with the unit operator before activating. If it is not connected to an alarm system, verify that it is operational by activating the control lever/device, until the water flows clear. Once the system is flushed be sure to replace the protective caps on the eyewash applicators.

Yes, No, N/A Questions – Each one of these questions requires an answer. Carefully consider each question and how it will affect or apply to the work being performed. If the question doesn't apply to the job, mark it "N/A" (Not applicable). Each question is important.

Back of Hazard Analysis form -

Job Hazard Analysis

Fall Protection – Answer the first question in this section. If you check "No", then you can move on to the next section. If you check "Yes", then you must complete the entire Fall Protection section. Make sure that workers are properly trained in the use of fall protection equipment.

Scaffold User Inspection – Answer the first question of this section. If you check "No" then you can move on to the next section. If you check "Yes", then you must conduct a thorough inspection of the staging prior to use and complete the entire Scaffold User Inspection section.

If the scaffold is yellow-tagged, identify the hazard(s) that require the yellow tag (*i.e. – hole in deck*, *missing guardrail*, *restricted access*).

Job Steps – Briefly outline or list the steps necessary to safely complete the job from start to finish. For example:

Inspect/Prepare job site, obtain permit, complete Hazard Analysis form and review with crew, obtain/inspect tools and PPE, perform job, cleanup, return tools.

Existing Hazards – List hazards that are present at the job site. These will primarily be existing physical hazards. For example:

Elevated work, uneven surfaces, confined space, high noise levels, pinch points, conflicting work above/below, weather conditions.

Potential Hazards – List hazardous conditions that may be created/exposed while doing the work. For example:

Hot Pipes, product release, exposure to hazardous material(s), sparks/slag, heavy lifting, explosive atmosphere.

Action Taken To Eliminate or Minimize Hazards – List what you are going to do to eliminate or control each of the identified hazards.

Crew/Employee Signatures – Now that you have filled in the blanks and answered the questions, review the Hazard Analysis form with all crewmembers and any other contractor client personnel

Job Hazard Analysis

working on the job. When each crew member understands the hazards present, is properly trained for their assigned task and understands how to complete the work safely, they must sign their name in the same numbered space as they printed their name on the front of the form. Do not sign if you don't understand or aren't properly trained.

Hazard Analysis session lead by – The supervisor or foreman or lead person that conducts the Hazard Analysis review with all crew members and checks the form for proper completion must print and sign their name and indicate the date and time the review was held.

Now you can start the job! Remember, the form is complete, but **the process continues**. Always remain alert for changing conditions. The Hazard Analysis form must be modified/updated if conditions change or new hazards are found. Any modifications must be communicated with all crewmembers. *Remember to review the Hazard Analysis with any new crewmembers that are added while the job is in progress. Their name(s) and signature(s) must also be added to the Hazard Analysis form.

Post all completed forms in a conspicuous and readily available location.

Job Hazard Analysis

HAZARD ANALYSIS/SAFE WORK PLAN – GENERAL WORK			
THIS CREW IS TO PERFORM THE FOLLOWING:			
DATE TIME	LOCATION	LOCATION OF:	PPE ✓ Check Applicable
SUPERVISOR	CLIENT CONTACT	Telephone Emergency Phone No. (s)?	❑ MINIMUM Hard Hat, Safety Glasses with Side Shields, Goggles, Ear Plugs, Gloves, Fire Retardant Coveralls, Work Boots ADDITIONAL <u>ALWAYS provide maximum level of worker protection</u> ❑ Vibration Dampening Gloves ❑ Knee Pads ❑ Face Shield ❑ Ear Muffs ❑ Safety Harness & Lanyard ❑ Supplied Air ❑ Half Face Respirator ❑ Full Face Respirator ❑ Acid Gear ❑ Rain Suit
CREW: (Print name below and sign in the same numbered space on the back of this sheet.			
☐	UNIT		
☐	EQUIPMENT	Fire Extinguisher	
☐	What product is/was in equipment?		
☐		Eyewash/Safety Shower	
☐	All permit numbers must be listed below.	Evacuation Area Primary:	
☐	HOT WORK #		
☐	**COLD WORK** #	Secondary:	
☐	UNIT ENTRY #		
☐	CONFINED SPACE #	**IF IN** DOUBT,??	

Job Hazard Analysis

□	**OTHER** #	STOP AND ASK!!	❑ Rubber Gloves ❑ Rubber Boots ❑ Other

Crew PSM trained?	YES	NO	N/A	Motorized equipment inspected?	YES	NO	N/A
Crew properly trained for job?	YES	NO	N/A	Operator(s) trained? Operator(s) on approved list?	YES	NO	N/A
Entire crew knows emergency evacuation procedure?	YES	NO	N/A	Rigging (slings, ropes, wire ropes, come-alongs, chain hoists) inspected and found safe?	YES	NO	N/A
Actions taken to prevent worker exposure to Hazardous Material?	YES	NO	N/A	Equipment blocked, de-pressured and drained?	YES	NO	N/A
Crew knows potential hazards?	YES	NO	N/A	Equipment locked/tagged out?	YES	NO	N/A
Crew knows location of MSDS?	YES	NO	N/A	GFCI's/low voltage lighting used?	YES	NO	N/A
Entire crew familiar with safety manual?	YES	NO	N/A	Crew knows hand signals?	YES	NO	N/A
Weather presents a problem?	YES	NO	N/A	Crew aware of pinch points?	YES	NO	N/A
Conflicting jobs in area?	YES	NO	N/A	Tools/equipment inspected and found safe?	YES	NO	N/A
Barricades installed as needed & tagged?	YES	NO	N/A	Tool holders available for use with knocker wrench?	YES	NO	N/A
Work area clean, orderly & safe?	YES	NO	N/A	Equipment blinded?	YES	NO	N/A

Job Hazard Analysis

Hoses and cords out of walkways?	YES	NO	N/A	Correct type of blinds & gaskets for job?	YES	NO	N/A
Drains properly covered?	YES	NO	N/A	Is work in confined space?	YES	NO	N/A
Work area clear of flammable hazards?	YES	NO	N/A				

Job Hazard Analysis

PLAN YOUR WORK, AND THEN WORK YOUR PLAN SAFELY!!!

FALL PROTECTION					
Is work being performed at an unprotected elevated area where workers may be exposed to a fall of 6 feet or more? Note: Client/Owner or working conditions may require fall protection at lower elevations. If yes, complete the following information.				Yes	No
Have workers that require fall protection been provided with a full body harness, appropriate lanyard(s) with shock absorbing device and boom strap (if needed)?	Yes	No	Is static line required? If yes, has it been inspected by a competent person prior to use?	Yes Yes	No No
Have all workers completed fall protection training?	Yes	No	Are adequate anchor points present?	Yes	No
Has all fall protection equipment been inspected prior to use and found to be in safe condition?				Yes	No
List any other fall protection equipment required:					

SCAFFOLD USER INSPECTION: Does job require use of scaffold? YES ☐ NO ☐ If yes, complete the section below.

Inspect the following items before using	*(Check box when found safe for use)* ☑		
Top and mid rails in place	☐	Bars and clamps tight and secure	☐
Toe boards and falling object protection in place and secure	☐	Ladders in place and secure	☐
Weather conditions do not present a hazard	☐	Holes in decks adequately covered	☐
Planks in safe condition and secured	☐	Free of slipping and/or tripping hazard	☐
Personnel barriers installed on hot lines/equipment	☐	Scaffolding properly tagged	☐
Free of overhead hazards ☐ List any hazards:		*Enter Maximum Load Allowed* *(Heavy Duty Formula is Square Feet x 75 PSF = Max Capacity in pounds)*	

Steps of Task (List steps necessary to completed the task)	**Potential Hazards** Evaluate hazards associated with Tools being used, Methods employed to accomplish task, Materials required to complete task, and Working Environment/Conditions	**Controls** (Identify preventative measures to be used to control each identified hazard)	PSM standards require employees to be trained on the hazards associated with each task. Do not sign this form unless you have been trained and understand the potential hazards associated with this task. If you have not been trained, do not understand or feel you can not complete this job safely, speak to your supervisor before starting work.
			Sign your name:

Job Hazard Analysis

			1
			2
			3
			4
			5
			6
			7
			8
			9
			10

Hazard Analysis session lead by:	*(circle one)*	*Supervisor*	*Lead Person*	*Other*
Print Name:	Signature:		Date:	Time:
Reviewed By:	*(circle one)*	*Supervisor*	*Safety*	*Other*
Print Name:	Signature:		Date:	Time:

Journey Management

1.0 PURPOSE

This program is written to reduce incidents involving vehicle operations and to require planning of trips by all employees operating owned, leased or borrowed vehicles.

Key Responsibilities

PNT Consulting LLC Safety Manager

- The designated Safety Manager is responsible for developing and maintaining the journey management program and related procedures.

Site Manager

- Responsible for the implementation and maintenance of the journey management program for their site and ensuring all assets are made available for compliance with the program.

Employees

- All shall be familiar with this program and the local workplace vehicle safety program.
- Another individual is aware of the driver's trip itinerary. Employees should notify their supervisor or another individual who is not traveling with them of their travel plans. This includes where they are going, when they should be getting there and when they plan to return.
- Drivers must carry a reliable method of communication (cell phones, CB radio, etc.) in case of emergency. Drivers should always carry a cell phone, especially when traveling in rural areas. Consider subscribing to an in-vehicle communication/ remote diagnostic service (e.g. On-Star) if the vehicle is equipped with one.
- Follow all requirements, report unsafe conditions, and follow all posted requirements.

Journey Management Plan

The Journey Management Plan is reviewed with affected employees. The Journey Management Plan should be reviewed with road travelers before they perform any driving on company business. A copy of the plan must be readily available at the workplace. Road travelers should carry a copy of the plan.

Driving directions shall be obtained before traveling to an unfamiliar destination. Before taking a trip to an unfamiliar location each employee will ensure they have printed driving directions available. Do not plan to read directions from a smartphone while driving. A GPS device may be used, but printed directions should be kept as a back-up.

Potential journeys involving driving and/or road transport should be screened and assessed relative to hazards, risks and costs with the following type of questions:

- Road travel should be limited whenever practicable. Road journeys should only be taken when necessary. Try to complete multiple tasks in single trips to reduce the amount of driving for improved safety and efficiency. If the trip is being taken to meet with someone, determine if the meeting can be done over the phone instead.
- Consider safer methods of travel (air, train, etc.) where practicable.

- Can the business requirement for a potential journey be delayed and possibly combined with a later trip?
- Driving during adverse weather conditions should be avoided, whenever practicable. Before leaving on a trip, ensure that weather conditions are safe for driving. Ensure the vehicle being used is adequate for the weather conditions. Make sure emergency supplies are in the vehicle, and the driver has a cell phone in case of emergency. In particularly harsh conditions, consider cancelling or rescheduling the trip.
- Can the journey be combined with other people to share a vehicle?
- Road travel is completed during daylight hours, whenever practicable. Driving should be done during daylight hours rather than after dark whenever possible. Reduce speed when driving at night. Be aware of the potential for wildlife to be on the road, especially when driving at dusk or dawn
- Is a fit-for-purpose vehicle for the expected route and conditions available (for example, a four-wheel drive vehicle, etc.)?
- Rest breaks should be taken to reduce fatigue. When driving long distances sufficient breaks should be taken to prevent fatigue. When driving alone and having trouble staying awake, pull off the road and get out of the vehicle for fresh air, or take a power nap. If driving late at night, consider getting a hotel room and starting fresh the next day. If two licensed drivers are in the vehicle, take turns driving. Get plenty of rest before beginning your journey.

Vehicle Operations Requirements

- Operators of PNT Consulting LLC or client on or off road vehicles shall be qualified by possession of a valid, current driver's license for the type of vehicle being driven.
- Only authorized employees will drive a motor vehicle in the course and scope of work or operate a company owned vehicle.
- No passengers shall be on trucks used to deliver goods.
- Backing is prohibited whenever practicable. Where backing is required, drivers, when parking, should make every effort to park the vehicle in a manner that allows the first move when leaving the parking space to be forward.
- Drivers must have either a reversing alarm, use a spotter or walk around the truck/trailer prior to backing.
- Passenger compartments are to be free from loose objects that might endanger passengers in the event of an incident. Any vehicle with non-segregated storage shall be equipped with a cargo net or equivalent to separate the storage area.
- Signs, stickers or labels are to be fitted in such a manner that they do not obstruct the driver's vision or impede the driver's use of any controls.

<u>Employees driving vehicles are required to follow safe driving practices:</u>

- Obey all federal and local driving laws or regulations as well as requirements of clients;
- Immediately report any citation, warning, traffic violation, collision, vehicle damage or near miss associated with company or client vehicle operation or while driving on company duties to the supervisor;
- Immediately report any restriction or change to their driving privileges to the supervisor.

- Seat belts shall always be worn by all occupants whenever the vehicle is in motion; only seats fitted with three-point inertia-reel type seatbelts shall be used. All vehicles capable of more than 10 mph/15 kph shall have seat belts installed.
- Defensive drivers continually assess conditions and hazards and remain prepared for any challenge that may approach them;
- When speaking with a passenger, always keep your eyes on the road;
- Both hands on the wheel;
- No use of cell phones, radios or other electronic devices while driving any vehicle - vehicle must be safely parked prior to using a mobile phone or 2-way radio.
- Slow down around construction, large vehicles, wildlife, fog, rain, snow, or anything else that adds a hazard to your driving;
- Drive for conditions, not just the speed limit;
- Alcohol or illegal drugs are not allowed to be in a company, client or leased vehicle at any time;
- Drivers shall not operate a motor vehicle while under the influence of alcohol, illegal drugs, or prescription or over-the counter medications that might impair their driving skills.

Drivers are to be prepared before leaving:

- Perform 360 walk around – report new damage;
- Check windshield for cracks that could interfere with vision;
- Inspect for vehicle damage and immediately report any damage to the supervisor if not previously observed;
- Make sure dirt or snow is removed from lights on all sides of the vehicle;
- Brush or clean off snow or ice on all windows to ensure complete vision;
- Check fuel level to be certain the destination can be reached;
- Check to ensure the license plates and inspection tag on vehicle are current;
- Ensure that there is a first aid kit and inspected fire extinguisher in the company vehicle;
- Ensure the driver is rested and alert for driving;
- Employees are not to perform repairs or maintenance other than routine fluid additions.

Vehicle Requirements

- All vehicles shall be fit for the purpose, and shall be maintained in safe working order.
- Tire type and pattern is to be recommended by the vehicle or tire manufacturer for use on the vehicle in the area of operation.
- Vehicles are to be fitted with a spare wheel and changing equipment to safely change a wheel, or a suitable alternative.
- Loads shall be secure and shall not exceed the manufacturer's specifications and legal limits for the vehicle.
- Vehicles are equipped with roadside emergency kits. Roadside emergency kits should be kept in all vehicles used for highway travel. These kits shall include equipment to assist in a roadside emergency such as water, booster cables, first aid supplies, warning triangles, flashlights, etc. If there is a potential for snow and ice, carry sandbags and a shovel.

- All vehicles are to be equipped with a multipurpose fire extinguisher with a capacity of at least 0.9 kg/2 lb. The fire extinguisher shall be securely mounted on a bracket and located so that it is easily accessible in an emergency without becoming a hazard in case of an incident.
- All drivers of light vehicles shall carry a high visibility jacket for use in case of emergency stops.
- All light duty vehicles carry a minimum of one collapsible hazard warning triangle.

Ladder Safety

1.0 PURPOSE

The Ladder Safety Policy is intended to provide employees with safe guidelines for the use of portable ladders, while complying with applicable Regulatory Compliance Standards.

POLICY:

Under no circumstances are portable ladders to be used unless conditions are considered safe, secure and in compliance and company procedures and safe work practices.

PROCEDURES:

1. The use of ladders with broken or missing rungs or steps, broken or split side rails, or other faulty or defective construction is prohibited. All rungs, cleats, and steps will be parallel, level and uniformly spaced when the ladder is being used. All ladders will be inspected prior to use by a competent person. When ladders with such defects are discovered they must be immediately removed from service and tagged as such.
2. Employees will face the ladder and will not carry material or tools in their hands while ascending or descending.
3. Ladders will not be loaded beyond the maximum intended load for which they were built or beyond the manufacturer's rated capacity.
4. All ladders shall be placed on secure footing, and the area around the top and bottom will be kept clear of work materials, tools and debris.
5. Planks will not be used on the top step of stepladders.
6. Portable ladders will be placed and used at a pitch that places the horizontal distance, from the top support to the foot of the ladder, at about one-quarter of the working length of the ladder. Ladders will not be used in a horizontal position as a platform, runway or scaffold.
7. Ladders shall not be placed in front of doors, unless door is blocked open, and/or a barricade or guard is provided.
8. Ladders shall not be placed on scaffold, boxes, boards, barrels, or other unstable bases.
9. Ladders shall not be spliced together.
10. Employees will not stand on the topcap or the step below the topcap of a stepladder.
11. Any ladder splashed with caustic or acid shall not be used until thoroughly cleaned and inspected for possible corrosive damage.

12. There shall be ample clearance and clear access at the top and bottom of portable ladders.
13. Portable rung ladders shall only be used with the metal supports on the under-side.
14. No ladder shall be used to gain access to a roof unless it extends at least 3 feet above the point of highest support with the building. Side rails must extend not less than 36” above any landing. When this is not practical, grab rails will be provided to facilitate employee movement to and from the point of access.
15. Portable metal ladders will not be used for electrical work or where they may contact electrical conductors.
16. All ladders shall be equipped with non-slip bases when a hazard of slipping exists.
17. All ladders will be tied off on top, blocked or otherwise secured to prevent movement before work is performed from them.
18. All ladders must have a minimum width of 12 inches. All ladders must have a distance of 12" between rungs.
19. The company prefers not to use or issue chain ladders, however if a client provides or mandates chain ladder usage, a thorough pre-use inspection of the ladder(s) must be performed. When there is a need for this type of ladder, wire rope ladders are preferred.
20. Stepladders shall not exceed 20 feet in length.
21. Extension ladders shall be equipped with positive stops.
22. Ladders shall be maintained in good condition.
23. Only one employee is to work on or climb a ladder at the same time.
24. All work done from a ladder shall be within an individual’s normal reach and with no overextending allowed.
25. All work done from a ladder that exposes a worker to a fall potential of 6 feet or more requires the worker to wear a harness and be tied off per the Fall Protection Policy. Employees are not permitted to stand or work off of the top three rungs or cleats of a ladder unless there are members of the structure that provide a firm handhold, or the employee is protected by personal fall protection.

Landscaping Hand & Power Tool Safety

1.0 PURPOSE

GENERAL SAFETY

- If a tool fails its mandatory pre-use inspection or is damaged during use, a DO NOT USE tag must be applied and notify the competent person who will inform the Safety Director.
- You must wear eye protection safety glasses all times when operating power tools, to protect against flying debris that can result in eye injuries or blindness.
- Angle grinders require a minimum combination of a face shield and safety glasses, ideally goggles should be used in place of safety glasses when fine or aerosolized particles may be present.
- Chain saws require safety glasses and a face shield, wire mesh or plastic.
- Drills, saws, air powered tools all require safety glasses.
- Never use a tool, machine, or device that you do not know how to use.
- Use only tools that are provided by or specifically approved by the company.
- All tools must be kept in good repair and working order.
- Examine tools before and after use and return them to their designated place when finished.
- Do not attempt to repair any tool, machine, or device unless you are qualified to do so.
- Use tools only for their intended purpose and use the correct tool for the job to be performed.
- Do not use an axe as a hammer or sledge.
- Cracked handles on tools must be replaced. Do not tape or try to secure broken handles with wire.
- Never drop or throw tools. Lower via rope and bucket.
- Never point tools at people.
- Never leave tools unattended or unsecured on elevated places such as roof top edges, ladder platforms, and scaffold planks where they can fall. Use a bucket, tool belt, or other effective means to protect tools from falling when they are not in actual use.
- Cutting tools, such as saws, chisels, and drill bits must be kept properly sharpened and must be guarded or sheathed when not in use.
- Do not carry sharp or pointed tools in pockets.
- Do not carry or place sharp or pointed tools where they might cut, stab or otherwise injure the person carrying them or others in the area.
- Do not carry tools over your stomach or in the middle of your back when working in an elevated position, to avoid injury to internal organs and spine in case of a fall.

WORKING WITH TOOLS NEAR POWER LINES AND ELECTRICAL CIRCUITS

- When working on or near power lines or electrical circuits or equipment, never use hammers with metal handles, screw drivers with a metal shafts that continues through the handle, metal measuring tapes, or ladders, probes or other items made of metal or other material that conducts electricity.
- Arrange and position power tools and extension cords so that they will not come in contact with energized power lines or other conductors.
- To protect against electric shock, wear insulated gloves when operating power tools in contact with electrical circuits.

COMPRESSORS

- The force generated by compressors can inject chemicals and particles into and through clothing

and skin, which can result in disfigurement, the loss of fingers, hands, feet and even death.

- Never point a compressor hose in the direction of or at another person.
- Use extreme caution not to place any part of your own body in front of a compressor hose.
- When using a portable compressor on wheels that is not attached to other equipment, make sure the wheels are positively locked, blocked, or otherwise secured to prevent the compressor from rolling.
- Drain compressed air tanks of liquid as recommended by the manufacturer's specifications. Pop compressor safety valves regularly.

DUST OR EXPLOSIVE VAPORS

- Ordinary electric tools create sparks that may ignite flammable or explosive vapors, gases, or dust. If flammable or explosive conditions exist, do not use electric power tools unless they are specifically intended for use in such an environment.

CHAIN SAWS

- Before using a chain saw, carefully inspect the work area and the items to be cut. Remove obstructions that could become tangled in the saw, become projectiles, or create other hazards.
- When operating a chain saw, never wear loose or torn clothing or any other articles that could get caught in the saw. Keep long hair tied back and out of the way. Wear eye protection and a face guard. Wear chain saw chaps and gloves.
- Wear protective gloves, safety goggles, and hearing protection while operating a chain saw.
- Do not use a chain saw if the chain is loose or any teeth are broken or missing.
- When starting a gas power chain saw, you must place the saw on or against a solid support; starting a chainsaw that is resting against the operator's leg/knee is prohibited.
- After starting the saw, check the running condition before cutting and before raising the saw to an elevated position.
- Grip the saw firmly with both hands during the entire cutting operation. Do not attempt to use a chain saw above shoulder level.
- Always turn off the saw (and if it is electrically powered, disconnect it):
  - When it is unattended.
  - When you are changing work positions or moving the saw.
  - Before working on the saw or touching the chain or cutting bar.
  - Before refueling. If any gas spills on the saw wipe it off before starting the saw.

GAS POWERED TOOLS

- To avoid explosions, smoking or open flames are not permitted in the area when gas powered tools are being fueled.
- Carbon monoxide from gas-powered engines can kill you in a matter of minutes. To protect against carbon monoxide poisoning, never operate a gas-powered tool in an enclosed area.
- Never use gasoline for cleaning floors, tools, clothes or hands.
- Always store gasoline in an approved, closed safety container.
- The use of plastic fuel cans is prohibited; fuel may only be transported in DOT approved metal cans.
- Pouring gasoline from one container to another may generate a charge of static electricity, which could ignite the gasoline. To avoid this, maintain metal-to-metal contact when pouring.
- If gasoline spills near an electrical switch/outlet, make sure the spill is cleaned up and all vapors

have completely evaporated before turning on the switch, to avoid igniting vapors by electrical sparks.

TRAINING

All employees will be trained on each tool's use, inspection procedures and PPE required for each tool required for their job duties.

Lead Awareness

1.0 PURPOSE

This safety guideline is intended to provide suitable information to all employees regarding the potential effects of Lead and where lead may be found so that adequate measures can be taken to limit exposures through controls in the workplace.

GENERAL

The objective of this guideline is to prevent absorption of harmful quantities of lead. The guideline is intended to protect employees from the immediate toxic effects of lead and from the serious toxic effects that may not become apparent until years of exposure have passed.

CHARACTERISTICS & WHERE IT CAN BE FOUND

To understand why lead is so hazardous, it is important to know what it is, the hazardous effects on people, and which materials do or may contain lead. Once this is understood, employees will gain a respect for the safety guidelines set forth in this policy.

What Is It?

Pure lead (Pb) is a heavy metal and is a basic chemical element. It can combine with various other substances to form numerous lead compounds.

Lead can be found in:

- Old glossy paints used on walls and pipe.
- Building and roof metal support frames.

Report to the Contracting Company's Project Manager anytime you suspect lead-containing materials that may not have been disclosed:

- Cracked or pealing paint,
- Visible paint dust, grindings, or shavings.

HEALTH EFFECTS:

I. **<u>Ways in which lead enters your body.</u>**

Lead can be absorbed into your body by inhalation (breathing) and ingestion (eating). When lead is scattered in the air it can be inhaled and absorbed through your lungs and upper respiratory tract. Inhalation of airborne lead is generally the most important source of occupational lead absorption. You can also absorb lead through your digestive system if lead gets into your mouth and is swallowed.

Hazards encountered with lead occur when:

- Inhaling lead as a dust, fume or mist.
- Ingesting lead through food, cigarettes, and chewing tobacco when handled with contaminated hands.

Lead (except for certain organic lead compounds not covered by the standard, such as tetraethyl lead) is not absorbed through your skin. When lead is scattered in the air as a dust, fume or mist it can be inhaled and absorbed through your lungs and upper respiratory tract. Inhalation of

airborne lead is generally the most important source of occupational lead absorption. You can also absorb lead through your digestive system if lead gets into your mouth and is swallowed. If you handle food, cigarettes, chewing tobacco, or make-up, which have lead on them or handle them with hands contaminated with lead, this will contribute to ingestion.

A significant portion of the lead that you inhale or ingest gets into your blood stream. Once in your blood system, lead is circulated throughout your body and stored in various organs and body tissues. Some of this lead is quickly filtered out of your body and excreted, but some remains in the blood and other tissues. As exposure to lead continues, the amount stored in your body will increase if you are absorbing more lead than your body is excreting. Even though you may not be aware of any immediate symptoms of disease, this lead stored in your tissues can be slowly causing irreversible damage, first to individual cells, then to your organs and whole body systems.

II. **Effects of overexposure to lead -(1) Short-term (acute) overexposure**.

Lead is a potent, systemic poison that serves no known useful function once absorbed by your body. Taken in large enough doses, lead can kill you in a matter of days. A condition affecting the brain called acute encephalopathy may arise which develops quickly to seizures, coma, and death from cardiorespiratory arrest. A short-term dose of lead can lead to acute encephalopathy. Short-term occupational exposures of this magnitude are highly unusual, but not impossible. Similar forms of encephalopathy may, however, arise from extended, chronic exposure to lower doses of lead. There is no sharp dividing line between rapidly developing acute effects of lead and chronic effects, which take longer to acquire. Lead adversely affects numerous body systems and causes forms of health impairment and disease which arise after periods of exposure as short as days or as long as several years.

(2) Long-term (chronic) overexposure.

Chronic overexposure to lead may result in severe damage to your blood-forming, nervous, urinary and reproductive systems. Some common symptoms of chronic overexposure include loss of appetite, metallic taste in the mouth, anxiety, constipation, nausea, pallor, excessive tiredness, weakness, insomnia, headache, nervous irritability, muscle and joint pain or soreness, fine tremors, numbness, dizziness, hyperactivity and colic. In lead colic there may be severe abdominal pain.

Damage to the central nervous system in general and the brain (encephalopathy) in particular is one of the most severe forms of lead poisoning. The most severe, often fatal, form of encephalopathy may be preceded by vomiting, a feeling of dullness progressing to drowsiness and stupor, poor memory, restlessness, irritability, tremor, and convulsions. It may arise suddenly with the onset of seizures, followed by coma, and death. There is a tendency for muscular weakness to develop at the same time. This weakness may progress to paralysis often observed as a characteristic "wrist drop" or "foot drop" and is a manifestation of a disease to the nervous system called peripheral neuropathy.

Chronic overexposure to lead also results in kidney disease with few, if any, symptoms appearing until extensive and most likely permanent kidney damage has occurred. Routine laboratory tests reveal the presence of this kidney disease only after about two-thirds of kidney function is lost. When overt symptoms of urinary dysfunction arise, it is often too late to correct

or prevent worsening conditions, and progression to kidney dialysis or death is possible.

Chronic overexposure to lead impairs the reproductive systems of both men and women. Overexposure to lead may result in decreased sex drive, impotence and sterility in men. Lead can alter the structure of sperm cells raising the risk of birth defects. There is evidence of miscarriage and stillbirth in women whose husbands were exposed to lead or who were exposed to lead themselves. Lead exposure also may result in decreased fertility and abnormal menstrual cycles in women. The course of pregnancy may be adversely affected by exposure to lead since lead crosses the placental barrier and poses risks to developing fetuses. Children born of parents either one of whom were exposed to excess lead levels are more likely to have birth defects, mental retardation, or behavioral disorders or to die during the first year of childhood.

Overexposure to lead also disrupts the blood-forming system resulting in decreased hemoglobin (the substance in the blood that carries oxygen to the cells) and ultimately anemia. Anemia is characterized by weakness, pallor and fatigue as a result of decreased oxygen-carrying capacity in the blood.

PROCEDURES:

Permissible Exposure Limit (PEL)

The current Cal/OSHA lead standard is 50 µg/m^3 as an 8-hour Time Weighted Average (TWA). The standard as it applies to construction is unique in that it groups tasks ***presumed*** to create employee exposures above the PEL of 50 µg/m^3 as an 8-hour TWA, as follows:

LEAD-RELATED CONSTRUCTION TASKS AND THEIR 8-HOUR TWA EXPOSURE LEVELS

> 50 to 500 µg/m^3	**> 500 µg/m^3 to 2,500 µg/m^3**	**> 2,500 µg/m^3**
Manual demolition	Using lead-containing mortar	Abrasive blasting
Dry manual scraping	Lead burning	Welding
Dry manual sanding	Rivet busting	Torch cutting
Heat gun use	Power tool cleaning without dust detection systems	Torch burning
Power tool cleaning with dust collection systems	Cleanup of dry expendable abrasive blasting jobs	
Spray painting with lead paint	Abrasive blasting enclosure movement and removal	

Action Level

The standard also establishes an action level of 30 micrograms per cubic meter of air (30 µg/m^3), time-weighted average, based on an 8-hour workday. The action level initiates several requirements of the standard, such as exposure monitoring, medical surveillance, and training and education.

Evaluation Process

The Contracting Company's Project Manager will provide employees with results of any evaluation processes and a listing of lead containing material. The Contracting Company will provide all

precautions and render the area safe for IPM employees before work begins.

SAFETY MEASURES:

Employees are not permitted to work in areas where there may be a potential for Lead exposure. If it is necessary to perform any work where the exposure to Lead is about the acceptable limits, then must implement a comprehensive mandated safety policy and procedure that includes special elements of exposure monitoring, formal medical program, special personal protective equipment, and much more.

Below are listed possible work controls and practices:

1. WELDING, BURNING, AND TORCH CUTTING.

   Welding and cutting activities that potentially involve exposure to lead can occur as part of a number of construction projects such as highway/railroad bridge rehabilitation (including elevated mass-transit lines), demolition, and indoor and outdoor industrial facility maintenance and renovation. Lead exposures are generated when a piece of lead-based painted steel is heated to its melting point either by an oxyacetylene torch or an arc welder. In this situation, lead becomes airborne as a volatilized component of the coating.

   The amount of time a worker may spend actually welding or cutting can vary from only a few minutes up to a full shift. In addition, the coating being worked on may consist of several layers of lead-based paint, each of which could contain as much as 50% lead. Taken together, these factors suggest that a worker's exposure to airborne lead during welding or cutting activities can vary widely and may be exceedingly high. Lead burning, a process by which virgin or alloyed lead is melted with a torch or otherwise fused to another lead object, is typically performed in maintenance operations on electrostatic precipitators or during the installation of lead shot, bricks, or sheets in the walls or floors of health-care x-ray units or industrial sites. Lead health hazards in this operation, as in welding and torch cutting, are from lead that is superheated and released into the worker's breathing zone in the form of a fume.

   - Engineering Controls. The engineering controls that can be used, depending on feasibility, are:
     - ⇒ Local exhaust ventilation (LEV) that has a flanged hood and is equipped with HEPA filtration may be appropriate where the use of LEV does not create safety hazards. Use of a flexible duct system requires that the welder be instructed to keep the duct close to the emission source and to ensure the duct is not twisted or bent.
     - ⇒ A fume-extractor gun that removes fumes from the point of generation is an alternative to an exhaust hood for gas-shielded arc-welding processes. Such extraction systems can reduce breathing zone concentrations by 70% or more. These systems require that the gun and shielding gas flow rates be carefully balanced to maintain weld quality and still provide good exhaust flow.
     - ⇒ A longer cutting torch can be used in some situations to increase the distance from the lead source to the worker's breathing zone.
     - ⇒ Hydraulic shears can sometimes be used to mechanically cut steel that is coated with lead based-paint. The use of this method is limited by the ability of the shears to reach the cutting area.

⇒ Whenever possible, pneumatic air tools should be used to remove rivets in lieu of burning and torch cutting.

- Work Practice Controls. The following work practice controls will help to reduce worker exposures to lead during welding, burning, and torch cutting:
  - ⇒ Strip back all lead-based paint for a distance of at least 4 inches in all directions from the area of heat application. Chemical stripping, vacuum-shrouded hand tools, vacuum blasting, or other suitable method may be used. However, in enclosed spaces, strip back or protect the workers with air-line respirators.
  - ⇒ Ensure that workers avoid the smoke plume by standing to the side or upwind of the cutting torch whenever the configuration of the job permits.
  - ⇒ Prohibit burning to remove lead-based paint. Paint should be removed using other methods, such as chemical stripping, power tools (e.g. needle guns) with vacuum attachments, etc.

2. MANUAL SCRAPING AND SANDING OF LEAD-BASED PAINTS.
   Hand scraping of lead-based paints involves the use of a hand-held scraping tool to remove paint from coated surfaces. The health hazards in this activity are caused by the lead dust and paint chips produced in the scraping process. Hand sanding can also produce excessive dust. These activities are typically performed during residential and commercial/institutional lead abatement projects.
   - Engineering and Work Practice Controls. Controls that employers can implement to protect workers performing scraping and sanding of lead-based paints are:
     - ⇒ Use of wet-sanding and wet-scraping methods in conjunction with HEPA vacuuming or HEPA mechanical ventilation. Wet methods include misting of peeling paint with water before scraping, and sanding and misting of debris prior to sweeping or vacuuming.
     - ⇒ Use of shrouded power tools with HEPA vacuum attachments. The shroud must be kept flush with the surface.
     - ⇒ Use of techniques with known low exposure potential, such as encapsulation and removal or replacement instead of hand scraping and hand sanding.

REGULATED AREAS:

The Contracting Company will ensure a work plan is designed and implemented that will:

- ✓ Eliminate lead dust or fumes from exposing both work personnel and building occupants.
- ✓ Ensure that unauthorized persons cannot access the area.
- ✓ Use of signage - warning signs shall be provided and displayed at each regulated area, and is posted at all approaches to regulated areas.

TRAINING:

All employees will be provided awareness training in this program in order to be familiar with the potential hazards and proper safe work procedures to follow if exposed to this health hazard.
Training and information will be provided for all employees exposed to lead at or above the action

level, or who may suffer skin or eye irritation from lead. The training will inform exposed employees of:

- Specific hazards associated with their work environment,
- Protective measures which can be taken,
- Danger of lead to their bodies (including their reproductive systems), and
- Their rights under the standard.

Lockout Tagout

1.0 PURPOSE

Work activities associated with energized equipment or processes shall be controlled prior to initiating by verifying a zero energy state.

This policy covers minimum performance standards applicable to all Company Associates employees and locations. Local practices requiring more detailed or stringent rules, or local, state or other federal requirements regarding this subject can and should be added as an addendum to this procedure as applicable.

Purpose

To establish safe practices associated with equipment or processes that involve hazardous energy sources.

Scope

Applies to all Company Associates work sites, i.e., Company offices, client job sites, etc., that perform activities such as, but not limited to, erecting, installing, constructing, repairing, adjusting, inspecting, cleaning, operating or maintaining equipment/machines/processes whereby hazardous energy sources are involved such as accessing tanks, air handlers, etc.

Note special exception to policy: equipment/machines that have an electrical plug as the sole hazardous energy source and can reach a zero energy state by simply being unplugged are exempt from this policy, as long as control of the plug can be maintained at all times.

Definitions

Affected Employee means any Company Associates employee who is not an Authorized Employee but is required to work in the area of equipment/machine/processes where Lockout procedures are being implemented.

Authorized Employee means any Company Associates employee who utilizes Lockout procedures on equipment/machines/processes.

Control Mechanism means any lock or combination of locks, multi-lock hasps and/or other types of special mechanisms (chains, valve covers, breaker covers, etc.) applied to an energy-isolating device to ensure that it cannot be moved/operated.

Energy Isolating Device means a mechanical device that physically prevents the transmission or release of hazardous energy, including, but not limited to the following: a manually operated electrical circuit breaker; a disconnect switch; line valve; slide gate; similar device used to block or isolate energy.

Hazardous Energy Source means any type of energy that could injure anyone working on or near the equipment/machine/process if released as a result of work activities. Examples of hazardous energy sources include, but are not limited to the following: electrical; hydraulic (fluid/liquids); pneumatic (air); chemical; radiation; thermal; mechanical (from stored energy, like in flywheels and springs); and mechanical (from gravity).

Lockout means the placement of a control mechanism on an energy-isolating device that ensures that the equipment/machine/process being worked on cannot be operated/initiated until the control mechanism is removed.

Other Personnel means non Company Associates personnel or visitors to any work area where Company Associates authorized employees are utilizing processes outlined in this Policy.

Operation Device means any switch, button, leaver, valve, etc. that is expressly intended for the starting or initiation of the equipment/machine/process.

Zero Energy State means the equipment/machine/process has been purged of and blocked from hazardous energy sources; that is no hazardous energy is present.

Requirements

Identifying Applicable Equipment/Machines/Processes

The following shall be documented:

- Owned and common/typical equipment/machine/processes where this Policy applies
- Owned and known/common/typical energy isolating devices for applicable procedures related to the identified equipment/machine/processes
- Applicable lockout mechanisms necessary for applicable energy control procedures related to the identified equipment/machine/processes
- Applicable energy control procedures related to the identified equipment/machine/processes.

This information shall be developed by the Branch Safety Officer, posted on/near machine and kept on file, utilized within the training required for Authorized employees, and updated as equipment/machines/processes and lockout mechanisms are introduced.

Training

Initial Training

Each affected employee shall receive training during orientation on the procedures of this Policy Section for the expressed purpose of ensuring awareness of the prohibition of removing control mechanisms and/or operation/initiation of applicable equipment/machines/processes.

Each authorized employee shall receive special training in the recognition of hazardous energy sources, the specific and/or common equipment/machines/ processes within respective work areas, types of necessary control mechanisms, and the procedures of this Policy Section.

Other Re-training

Any affected or authorized employee shall be immediately re-trained if their actions during related work activities violated any portion of this Policy.

Lockout Procedures (in order of action)

Preparation

Authorized employees shall verbally notify affected Company employees Associates-employed or anyone considered as Other Personnel) of the procedures to be used BEFORE commencing other work activities.

Lockout Application

- Perform the actions BEFORE commencing other work activities, in the following order:
- Identify known operation devices for the equipment/machine/process, and commit all of them to the ‘off’ or ‘neutral’ position
- Identify known energy controlling devices for the equipment/machine/process, commit all of them to the ‘off’ or ‘neutral’ position following established machine shutdown procedures, and utilize a lockout device to secure them in the ‘off’ or ‘neutral’ position

    - Note 1: tag the lockout mechanism if multiple authorized employees are present or if the work will not be completed within the normal work shift. In such cases, mark the tag with your name and contact information.

- Note 2: If the proper lockout procedures or a hazardous energy source is unknown, authorized employees shall not conduct further work activities and shall immediately contact their supervisor for assistance/instructions on proceeding.

- Identify and neutralize all potential stored energy sources such as gravity, springs, electrical capacitors, hydraulic pressure and compressed gases.

- Visually inspect the equipment/machine/process and/or use electronic or mechanical means to verify that a zero energy state has been reached

- Ensure that affected and authorized employees are clear from the equipment/machine/process, then try to activate the equipment/machine/process by initiating identified operation devices to ensure that a zero energy state has been reached. Apply additional lockouts to any energy controlling devices having unprotected energy sources and repeat this procedure point until a zero energy state is obtained. Proceed with the required work activities for the equipment/machine/process when the zero energy state is obtained

- If a zero energy state cannot be reached, contact your supervisor for instructions

Release From Lockout

Authorized employees shall visually inspect the equipment/machine/ process to ensure that personnel and tools have been cleared and/or removed.

Then, only the authorized employee who placed the lockout mechanism into use can remove it. See Section 5.5 of this Policy for Emergency Lock Removal Procedures.

Testing/Diagnosis/Re-positioning Procedures During Lockout

Perform the actions, in the following order:

- Clear the equipment/machine/process of tools, materials and personnel
- Remove the applicable lockout mechanisms from the energy isolating device
- Energize the applicable portion of the equipment/machine/process
- Proceed with the test/diagnosis/re-positioning

- De-energize the equipment/machine/process
- Re-apply the applicable lockout mechanisms to the energy isolating device
- Re-test operation devices to ensure a zero energy state is in place
- Continue work and repeat this procedure as necessary

Emergency Lock Removal Procedures

Every effort shall be made to personally contact authorized employees prior to their lock being removed.

The direct supervisor of an authorized employee is the first person allowed to remove their lock. If the applicable supervisor is not physically capable, only another authorized employee can be provided with the authority, directly by the applicable supervisor only.

In either event, the direct supervisor of the authorized employee who originally placed the lockout mechanism(s) to be removed, shall inform that employee of the removal BEFORE that employee returns to that work area. This communication shall be documented .Messages (oral, written, or forwarded) are prohibited.

Lockout Control Mechanisms

Locks

Each authorized employee shall be issued a lock (for locks) individually keyed and manufactured of a standard size, shape and/or color. Each Branch shall identify this as an Addendum to this manual section.

Each Branch shall require a list of employees and corresponding lock numbers maintained at the work site. Such lists shall be maintained by the Branch Safety Officer or designee.

Multi-lock Hasps

The following steps shall be followed to accommodate multiple authorized employees on a single project:

- A multi-lock hasp shall be utilized when more than one authorized employee is performing work on the equipment/machine/process.
- The senior Company authorized employee working on the specific project shall be responsible for assuring that other authorized employees working on the project attach their personal lockout device prior to work being performed.
- The senior Company authorized employee working on the specific project shall also be responsible for assuring the continuity of the lockout device during shift changes and/or personnel changes unless formally relieved of that responsibility by the Project Manager. At which time, the Project Manager will obtain the responsibility for the integrity of the lockout device.
- When a traditional multi-lock hasp will not provide enough attachment points for authorized employees, another method shall be established (e.g. adding another multi-lock hasp, lockout box, lockout cabinet, etc.) as per the direction of the senior Company authorized employee working on the specific project.

Other Specialized Equipment

Tags (when necessary) shall be durable, standardized in type and have areas to indicate the employee's name and contact information. These tags shall be established in Addendum to this Policy.

Multi-Contractor Site/Subcontractor

Authorized employees shall inform the supervision of other employers in a multi-employer work site of all aspects covered by this manual section.

Subcontractors for Company Associates are required to meet or exceed all aspects covered by this manual section.

Policy Review and Certification

Annually, this manual section (and applicable addendums and related training programs) shall be reviewed and documented (certified) by the Branch Safety Officer for updating and verifying the

use of these procedures. Inspections verifying that these procedures are being followed shall be a component of this review.

NFPA_70E_2

1.0 PURPOSE

Purpose

The purpose of this program is to set forth procedures for the safe use of electrical equipment, tools, and to comply with NFPA 70E requirements.

Scope

This program applies to all Company employees, temporary employees, and contractors. When work is performed on a non-owned or operated site, the operator's program shall take precedence, however, this document covers Company employees and contractors and shall be used on owned premises, or when an operator's program doesn't exist or is less stringent.
The Company shall advise the host employer of:

- Any unique hazards presented by the contract employer's work,
- Any unanticipated hazards found during work by the Company that the host employer did not mention, and
- The measures the Company took to correct any hazards reported by the host employer to prevent such hazards from recurring in the future.

Responsibilities
Managers/Supervisor

The HSE Manager will develop electrical safety programs and procedures in accordance with OSHA requirements and/or as indicated by events and circumstances.

Operations Managers and Supervisors are responsible for ensuring that only qualified employees and or qualified contractors perform electrical repairs or installations. Unqualified persons shall not be permitted to enter spaces that are required to be accessible to qualified employees only, unless the electric conductors and equipment involved are in an electrically safe work condition.

Operations Managers and Supervisors shall ensure a documented job briefing is held before starting each job and will include all employees involved. The briefing will cover hazards associated with the job, work procedures involved, special precautions, energy source controls and PPE requirements.

Operations Managers are also responsible for ensuring all applicable electrical safety programs are implemented and maintained at their locations.

Employees are responsible to use electrical equipment, tools, and appliances according to this program, for attending required training sessions when directed to do so and to report unsafe conditions to their supervisor immediately.
Only qualified employees may work on electric circuit parts or equipment that has not been de-energized. Such employees shall be made familiar with the use of special precautionary techniques, PPE, insulating and shielding materials and insulated tools. Prior to any work being done within the Limited Approach Boundary a hazard risk analysis shall be performed. The analysis shall contain event severity, frequency, probability and avoidance to determine the level of safe practices employed.

Safe Work Practices

Prior to any work being done within the Limited Approach Boundary a hazard risk analysis shall be performed. The analysis shall contain event severity, frequency, probability and avoidance to determine the level of safe practices employed.

Safe Work Practices for Working within the Limited Approach Boundary

The limited approach boundary is the distance from an exposed live part within which a shock hazard exists.

The restricted approach boundary is the closest distance to exposed live parts a qualified person can approach with without proper PPE and tools. Inside this boundary, accidental movement can put a part of the body or conductive tools in contact with live parts or inside the prohibited approach boundary. To cross the restricted approach boundary, the qualified person must:

- Have an energized work permit that is approved by the supervisor or manager responsible or the safety plan.
- Use PPE suitable for working near exposed lived parts and rated for the voltage and energy level involved.
- Be certain that no part of the body enters the prohibited space.
- Minimize the risk from unintended movement, by keeping as much of the body as possible out of the restricted space; body parts in the restricted space should be protected.

The prohibited approach boundary is the minimum approach distance to exposed live parts to prevent flashover or arcing. Approaching any closer is comparable to making direct contact with a live part. To cross the prohibited approach boundary, the qualified person must:

- Have specified training to work on exposed live parts.

- Have a permit with proper written work procedures and justifying the need to work that close.

- Do a risk analysis.

- Have (2) and (3) approved by the appropriate supervisor.

- Use PPE appropriate for working near exposed live parts and rated for the voltage and energy level involved.

The Flash Protection Boundary is the approach limit at a distance from exposed live parts within which a person could receive a second degree burn if an electrical arc flash were to occur.

- Use PPE appropriate for working near exposed live parts and rated for the voltage and energy level involved.

- For systems of 600 volts and less, the flash protection boundary is 4 feet, based on an available bolted fault current of 50 kA and a clearing time of 6 cycles for the circuit breaker to act, or any combination of fault currents and clearing times not exceeding 300 kA cycles.

- When working on de-energized parts and inside the flash protection boundary for nearby live exposed parts - If the parts cannot be de-energized, use barriers such as insulted blankets to protect against accidental contact or wear proper PPE.

Arc Flash Hazard Analysis

An arc flash hazard analysis includes the following:

- Collect data on the facility's power distribution system.
    - Arrangement of components on a one-line drawing with nameplate specifications of every device.
    - Lengths and cross-section area of all cables.

- Contact the electric utility for information including the minimum and maximum fault currents that can be expected at the entrance to the facility.

- Conduct a short circuit analysis followed by a coordination study is performed.

- Feed the resultant data into the NFPA 70E equations.
    - These equations produce the necessary flash protection boundary distances and incident energy to determine the minimum PPE requirement.

  - The flash protection boundary is the distance at which PPE is needed to prevent incurable burns (2nd degree or worse) if an arc flash occurs. (It is still possible to suffer 1st or 2nd degree burns.)

- For systems of 600 volts and less, the flash protection boundary is 4 feet, based on an available bolted fault current of 50 kA (kiloamps) and a clearing time of 6 cycles (0.1 seconds) for the circuit breaker to act, or any combination of fault currents and clearing times not exceeding 300 kA cycles (5000 ampere seconds).

When working on de-energized the parts, but still inside the flash protection boundary for nearby live exposed parts:

- If the parts cannot be de-energized, barriers such as insulated blankets must be used to protect against accidental contact or PPE must be worn.

- Employees shall not reach blindly into areas that might contain exposed live parts.

- Employees shall not enter spaces containing live parts unless illumination is provided that allows the work to be performed safely.

- Conductive articles of jewelry and clothing (such as watchbands, bracelets, rings, key chains, necklaces, metalized aprons, cloth with conductive thread, metal headgear, or metal frame glasses) shall not be worn where they present an electrical contact hazard with exposed live parts.

- Conductive materials, tools, and equipment that are in contact with any part of an employee's body shall be handled in a manner that prevents accidental contact with live parts. Such materials and equipment include, but are not limited to long conductive objects such as ducts, pipes, tubes, conductive hose and rope, metal-lined rules and scales, steel tapes, pulling lines, metal scaffold parts, structural members, and chains.

- When an employee works in a confined space or enclosed spaces (such as a manhole or vault) that contains exposed live parts, the employee shall use protective shields, barriers or insulating materials as necessary to avoid contact with these parts. Doors, hinged panels, and the like shall be secured to prevent them from swinging into employees. Refer to the confined space entry program.

Inspections

- Electrical equipment, tools, and appliances must be inspected prior to each use.

- The use of a hard fixed GFCI or a portable GFCI adapter shall be used with all portable hand tools, electric extension cords, drop lights and all 110 volt equipment.

- Faulty equipment, tools, or appliances shall be removed from service immediately and tagged “Out of Service”, dated and signed by the employee applying the tag.

When test instruments are used for the testing for the absence of voltage on conductors or circuit parts operating at 50 volts or more, the operation of the test instrument shall be verified before and after an absence of voltage test is performed.

Equipment

Test instruments, equipment, and their accessories shall meet the requirements of ANSI/ISA-61010-1-Safety Requirements for Electrical Equipment for Measurement, Control, and Laboratory Use Part 1 General Requirements, for rating and design requirements for voltage measurement and test instruments intended for use on electrical systems 1000 Volts and below.
When test instruments are used for the testing for the absence of voltage on conductors or circuit parts operating at 50 volts or more, the operation of the test instrument shall be verified before and after an absence of voltage test is performed.

Personal Protective Equipment

All insulating PPE must be inspected before each day's use and immediately following any incident that can reasonably be suspected of having caused damage. Insulating gloves shall be given an air test, along with the inspection.
Maximum test intervals for rubber insulating personal protective equipment shall include:

- Blankets-before first issue/every 12 months thereafter
- Gloves-before first issue and every 6 months
- Sleevers before first issue and every 12 months
- Covers and line hose shall be testing if insulating value is suspect.

Energized Electrical Work Permit

Work on energized electrical conductors or circuit parts that are not placed in an electrically safe work condition shall be considered energized electrical work and shall be performed by written permit only.

Lighting

Employees shall not enter spaces containing electrical hazards unless illumination is provided that enables the employees to perform the work safely. Where lack of illumination or an obstruction precludes observation of the work to be performed employees shall not perform any task within the

Limited Approach Boundary of energized electrical conductors or circuit parts operating at 50 volts or more or where an electrical hazard exists.

Extension Cords (Flexible Cords)

- Use only three-wire, grounded, extension cords and cables that conform to a hard service rating of 14 amperes or higher, and grounding of the tools or equipment being supplied.
- Only commercial or industrial rated-grounded extension cords may be used in shops and outdoors.
- Cords for use other than indoor appliances must have a rating of at least 14 amps.
- Cords must have suitable strain relief provisions at both the plug the receptacle ends.
- Work lamps (drop light) used to power electrical tools must have a 3 wire, grounded outlet, unless powering insulated tools.
- Adapters that allow three wire, grounded prongs, connected to two wire non-grounded outlets are strictly prohibited.
- Cords must have a service rating for hard or extra-hard service and have S, AJ, ST, SO, SJO, SJT, STO, or SJTO printed on the cord.

- Cords may not be run through doorways, under mats or carpets, across walkways or aisles, concealed behind walls, ceilings or floors, or run through holes in walls, or anywhere where they can become a tripping hazard.

- High current equipment or appliances should be plugged directly into a wall outlet whenever possible.

- All extension cords shall be plugged into one of the following:
- A GFCI outlet;
- A GFCI built into the cord;
- A GFCI adapter used between the wall outlet and cord plug.

- All extension cords and or electrical cords shall be inspected daily or before each use, for breaks, plug condition and ground lugs, possible internal breaks, and any other damage. If damage is found, the extension cord or electrical cord shall be remove from service and repaired or replaced.

- Extension cords shall not be used on compressor skid to operated heat tapes or any other type of equipment on a temporary basis. Heat tapes or other equipment shall be hard wired per applicable electrical codes.

Outlets

- Outlets connected to circuits with different voltages must use a design such that the attachment plugs on the circuits are not interchangeable.

Multiple Outlet Boxes

- Multiple outlet boxes must be plugged into a wall receptacle.

- Multiple outlet boxes must not be used to provide power to microwave ovens, toasters, space heaters, hot plates, coffeepots, or other high-current loads.

Double Insulated Tools

- Double insulated tools must have the factory label intact indicating the tool has been approved to be used without a three wire grounded supply cord connection.

- Double insulated tools must not be altered in any way, which would negate the factory rating.

NFPA_70E_2

Switches, circuit breakers, and disconnects

- All electrical equipment and tools must have an on and off switch and may not be turned on or off by plugging or unplugging the supply cord at the power outlet.
- Circuit breaker panel boxes and disconnects must be labeled with the voltage rating.
- Each breaker within a breaker panel must be labeled for the service it provides.
- Disconnect switches providing power for individual equipment must be labeled accordingly.

Ladders

- Only approved, non-conductive ladders, may be used when working near or with electrical equipment, which includes changing light bulbs.
- Ladders must be either constructed of wood, fiberglass, or have non-conductive side rails.
- Wood ladders should not be painted, which can hide defects, except with clear lacquer.
- When using ladders they shall be free from any moisture, oils, and greases.
- Confined or Enclosed Work Spaces

Energized and Overhead High Voltage Power Lines & Equipment

- A minimum clearance of 10 feet from high voltage lines must be maintained when operating vehicular and mechanical equipment such as forklifts, cranes, winch trucks, and other similar equipment.

- When possible, power lines shall be de-energized and grounded or other protective measures shall be provided before work is started.

- Minimum approach distance to energized high power voltages lines for unqualified employees is 10 feet.

- Minimum approach distance for qualified employees shall be followed per 29 CFR 1910.333(c)(3)(i) Qualified – Table S5 Selection and Use of Work Practices - Approach Distances for Qualified Employees – Alternating Current).

Confined or Enclosed Work Spaces

- When an employee works in a confined or enclosed space that contains exposed energized parts, the employee shall isolate the energy source and turn off the source and lock and tag out the energy source (Only qualified electricians can work on an exposed energy source).

- Protective shields, protective barriers or insulating materials as necessary shall be provided.

Enclosures, Breaker Panels, and Distribution Rooms

- A clear working space must be maintained in the front, back and on each side of all electrical enclosures and around electrical equipment for a safe operation and to permit access for maintenance and alteration.

- A minimum two-foot working floor space in front of panels and enclosures shall be painted yellow.

- Employees may not enter spaces containing exposed energized parts unless illumination is provided that enables the employees to work safely.

- Housekeeping in distribution rooms must receive high priority to provide a safe working and walking area in front of panels and to keep combustible materials to the minimum required to perform maintenance operations.

- All enclosures and distribution rooms must have “Danger: High Voltage – Authorized Personnel Only” posted on the front panel and on entrance doors.

- Flammable materials are strictly prohibited inside distribution rooms (Boxes, rags, cleaning fluids, etc.)

Lock Out/Tag Out

- No work shall be performed on (or near enough to them for employees to be exposed due to the dangers of tools or other equipment coming into contact with the live parts) live parts and the hazards they present.

- If any employee is exposed to contact with parts of fixed electric equipment or circuits which have been deenergized, the circuits energizing the parts shall be locked out or tagged or both.

- Conductors and parts of electrical equipment that have been de-energized but not been locked or tagged out shall be treated as live parts.

- Per Company policy all electrical will be outsourced and performed only by qualified and licensed electrical contractors who are familiar with the use of special precautionary techniques, PPE, insulating and shielding materials and insulated tools. Any equipment being made ready for maintenance will be locked out using Company's Control of Hazardous Energy – Lock Out/Tag Out Program. Lockouts are performed by the HSE Manager, Shop Foreman or Branch Manager. Designated employees in some branches may be trained by local management to lock out equipment. If live sources are to be worked it will only be performed with the knowledge of local management. Only certified electricians may work on electric circuit parts or equipment.

- Only authorized personnel may perform lock out/tag out work on electrical equipment and will follow Company's Control of Hazardous Energy – Lock out/Tag Out Program.

- Authorized personnel will be trained in lock out/tag out procedures.

- Affected personnel will be notified when lock out/tag out activities are being performed in their work area.

Contractors

- Only approved, certified, electrical contractors may perform construction and service work on Company or client property.

- It is the Manager/Supervisors responsibility to verify the contractor's certification.

Fire Extinguishers

- Approved fire extinguishers must be provided near electrical breaker panels and distribution centers.

- Water type extinguishers shall not be located closer than 50 feet from electrical equipment.

Electric Shock-CPR:

- If someone is discovered that has received an electric shock and is unconscious, first check to see if their body is in contact with an electrical circuit. Do not touch a person until you are sure there is no contact with an electrical circuit.

- When it is safe to make contact with the victim, begin CPR if the person's heart has stopped or they are not breathing.

- Call for help immediately.

Electric Welders

- A disconnecting means shall be provided in the supply circuit for each motor-generator arc welder, and for each AC transformer and DC rectifier arc welder which is not equipped with a disconnect mounted as an integral part of the welder.

- A switch or circuit breaker shall be provided by which each resistance welder and its control equipment can be isolated from the supply circuit. The ampere rating of this disconnecting means may not be less than the supply conductor ampacity.

Equipment Grounding

- All gas compressors, air compressors, separators, vessels, etc. shall be grounded by means of using a lug and ground strap, nominal in size to a ½" bolt or larger, attached to a ground rod six feet or longer.

- Equipment bonding jumpers shall be of copper or other corrosion-resistance material.

- The transfer of hazardous or flammable material from a metal or plastic container with a flash point of 100 degrees F or less shall have a ground strap from the container and attached to the skid or a ground rod placed in the ground.

Training

Employees are trained to understand the specific hazards associated with electrical energy. Employees shall be trained in safety-related work practices and procedural requirements as necessary to provide protection from the electrical hazards associated with their respective jobs. Employees shall be trained to identify and understand the relationship between electrical hazards and possible injury.

Employees shall be trained in the skills and techniques to distinguish exposed energized electrical conductors and circuit parts from other parts of electrical equipment, to determine the nominal voltage of exposed energized electrical conductors and circuit parts, the approach distances specified in Table 130.2 (below), and the decision making process necessary to determine the degree and extent of the hazard and the personal protective equipment and job planning necessary to perform the task safely.

NFPA_70E_2

Limited Approach Boundary

Nominal system voltage range, phase to phase	Exposed movable conductor	Exposed fixed-circuit part	Restricted approach boundary (allowing for accidental movement)	Prohibited approach boundary
0 to 50 volts	Not specified	Not specified	Not specified	Not specified
51 to 300 volts	10 ft. 0 in.	3 ft. 6 in.	Avoid contact	Avoid contact
301 to 750 volts	10 ft. 0 in.	3 ft. 6 in.	1 ft. 0 in.	0 ft. 1 in.
751 to 15 KV KV	10 ft. 0 in.	5 ft. 0 in.	2 ft. 2 in.	0 ft. 7 in.
15.1 kV to 36 KV	10 ft. 0 in.	6 ft. 0 in	2 ft. 7 in.	0 ft. 10 in.
36.1 KV to 46 kV	10 ft. 0 in.	8 ft. 0 in	2 ft 9 in.	1 ft. 5 in.
46.1 KV to 72.5 KV	10 ft. 0 in.	8 ft. 0 in.	3 ft 2 in.	2 ft. 1 in.
72.6 KV to 121 KV	10 ft. 8 in.	8 ft. 0 in.	3 ft. 3 in.	2 ft. 8 in.
138 to 145	11 ft 0 in	10 ft. 0 in.	3 ft. 7 in	3 ft. 1 in.
161 KV to 169 KV	11 ft 8 in.	11 ft. 8 in.	4 ft. 0 in.	3 ft. 6 in.
230 KV to 242 KV	13 ft. 0 in.	13 ft. 0 in.	5 ft. 3 in.	4 ft. 9 in.
345 KV to 262 KV	15 ft. 4 in	15 ft. 4 in.	8ft. 6 in.	8 ft. 0 in.

Motor Vehicle Safety Program

1.0 PURPOSE

This written Motor Vehicle Safety Program establishes guidelines to ensure that we hire capable operators, only allow eligible operators to drive a "covered motor vehicle," train and supervise operators, and maintain vehicles properly. A "covered motor vehicle" is a motor vehicle that is owned, leased, or rented by the company or is a driver-owned vehicle operated during work time. A **PNT Consulting LLC** employee may be assigned to use a company vehicle to visit clients, make deliveries, attend meetings, pick up supplies, or to do a variety of other tasks. When driving is part of the job, like every other task, it has to be done safely Adherence to this written program can improve traffic safety performance, minimize the risk of motor vehicle incidents, and help to keep our employees safe and our costs as low as possible. Management leads, supports, and enforces this program; but employee input is essential for its success PNT Consulting LLC will comply with all Federal and State agency requirements.

Administration

The **PNT Consulting LLC** Safety Manager is our Motor Vehicle Safety Program Administrator. The Program Administrator coordinates the Motor Vehicle Operation Program elements for our company. This person is responsible for setting up and managing the program so that managers, supervisors, and employees know what our company expects. The Safety Manager will examine our existing policies and practices to ensure that they encourage and do not discourage reporting and participation in our program. In this way, early reporting of motor vehicle incidents and hazards and meaningful employee participation in the program are more likely to occur. All company incentive programs are designed to reward safe motor vehicle operation (such as active participation in the program, the identification of motor vehicle hazards in the workplace, and the reporting of motor vehicle incidents early), rather than to reward employees for having fewer or lower rates of motor vehicle incidents. The responsibility and authority to allow an employee to operate a **PNT Consulting LLC** vehicle lies squarely on the shoulders of the **PNT Consulting LLC** Management Representative in charge of the keys to the vehicle that will be driven. In order for this program to be administratively effective, good judgment and correct choices must be made by the person in charge of their section or group of employees and vehicles. Prior to the assignment of any vehicle to any employee or prior to allowing an employee to drive their own vehicle on Company business or the continuation of driving any vehicle, **PNT Consulting LLC** or driver owned vehicle, the following will be reviewed for the criteria below.

A current valid state driver's license with no "Status Actions"; he/she must be at least 21 years of age to drive a CMV or 18 years of age or older to drive a Fleet Vehicle. A review of the driving record (3 years back initially, then annual thereafter) will be done. If the MVR indicates no violations, or the following minor violations, the employee may be considered for qualification by **PNT Consulting LLC** management. They are:

- conviction of one or more minor moving violations, as long as no more than 6 points have been assessed
- minor accident (no injuries) Note: If the driver/operator is able to remove the citation by going to traffic school, **PNT Consulting LLC** will take this action into consideration for final qualification of the driver.

If the employee's MVR indicates the following major violations, then the employee is NOT qualified to drive for **PNT Consulting LLC:**
• Operating a vehicle under the influence of a drug or alcohol
• Implied Consent Refusal (refusal to take blood alcohol test and or urine analysis) • Committing homicide, manslaughter or aggravated assault with a vehicle
• Failing to stop if you are involved in a traffic accident
• Reckless driving
• Felony speeding
• License Suspension or Revocation

Notification by **PNT Consulting LLC** insurance carrier that the employee is ineligible for auto insurance coverage will cause the driver to be ineligible to drive. The above listed violations should not be considered all inclusive, and these are not the only major violations that would disqualify the employee as a **PNT Consulting LLC** driver. Management reserves the right to make the final decision as to whether the employee will be qualified to drive for **PNT Consulting LLC**

Definitions

Fleet Vehicle
Any motor vehicle a company owns or leases that is used in the normal operations of a company. Vehicles which are used in the operation of a company, but are owned by company employees are not fleet vehicles. Fleet vehicles include gasoline/diesel powered vehicles and alternative-fuel vehicles. Commercial driver's license (CDL) A license issued to an individual by a State or other jurisdiction of domicile, in accordance with the standards contained in this part, which authorizes the individual to operate a class of a commercial motor vehicle.

Commercial motor vehicle (CMV)
A motor vehicle or combination of motor vehicles used in commerce to transport passengers or property if the motor vehicle:
• Has a gross combination weight rating or gross combination weight of 11,794 kilograms or more (26,001 pounds or more), whichever is greater (including) towed unit(s) with a gross vehicle weight rating or gross vehicle weight of more than 4,536 kilograms (10,001 pounds), whichever is greater; or
• Has a gross vehicle rating, gross combination weight rating, gross vehicle weight or gross combination weight of 4,536 kg (10,001 lbs.) or more; or
• Is designed or used to transport more than 8 passengers for compensation or more than 15 passengers without compensation; or
• Is of any size and is used in the transportation of hazardous materials.

Gross combination weight rating (GCWR)
The value specified by the manufacturer as the loaded weight of a combination (articulated) vehicle. In the absence of a value specified by the manufacturer, GCWR will be determined by adding the GVWR of the power unit and the total weight of the towed unit and any load thereon.

Gross vehicle weight rating (GVWR)
The value specified by the manufacturer as the loaded weight of a single vehicle. Out-of-service order (OOS) A declaration by an authorized enforcement officer of a Federal, State, Canadian, Mexican, or local jurisdiction that a driver, a commercial motor vehicle, or a motor carrier

operation, is out-of-service pursuant to FMCSR 386.72, 392.5, 395.13, 396.9, or compatible laws, or the North American Uniform Out-of-Service Criteria.

Motor vehicle

A vehicle, machine, tractor, trailer, or semitrailer propelled or drawn by mechanical power that is used on highways.

Commercial Driver Qualifications (CMV and CDL)

A person shall not drive a commercial motor vehicle unless he/she is qualified to drive a commercial motor vehicle. **PNT Consulting LLC** shall not require or permit a person to drive a commercial motor vehicle unless that person is qualified to drive a commercial motor vehicle.

A person is qualified to drive a CMV:

1. If he/she at least 21 years old;
2. Can read and speak the English language sufficiently to converse with the general public, to understand highway traffic signs and signals in the English language, to respond to official inquiries, and to make entries on reports and records;
3. Can, by reason of experience, training, or both, safely operate the type of commercial motor vehicle he/she drives;
4. Is physically qualified to drive a commercial motor vehicle in accordance with FMCSR's Physical Qualifications and Examinations;
5. Has a currently valid commercial motor vehicle operator's license issued only by one State or jurisdiction (for GVWs or GCVWs of 26,001+ lbs.);
6. Has prepared and furnished **PNT Consulting LLC** with the list of violations or the Certificate of Violations;
7. Is not disqualified to drive a commercial motor vehicle under FMCSR §391.15; and
8. Has successfully completed a driver's road test and has been issued a certificate of driver's road test, or has presented an operator's license or a certificate of road test which we may accept as equivalent to a road test under FMCSR §391.33.

Final determination will be the responsibility of **PNT Consulting LLC** Management with the advice of the Safety Manager.

All commercial drivers for **PNBT Consulting LLC** must always be prepared for their driving of a **PNT Consulting LLC** CMV. There are many items, mainly documentation and proofs. Most CMV/CDL drivers will need:

- Certificate of Registration
- Hours of service records (log book)
- Registration papers (cab cards, permits, etc.)
- Proof of insurance
- Driver's license documents and any related certificates
- Special permits for oversize and overweight loads, if required
- Hazardous materials shipping papers, if required
- Fuel tax permits (IFTA)
- Bills/Invoices, etc. showing content and origin of agricultural products, if required
- Evidence of financial responsibility

Only pre-qualified and authorized drivers may operate **PNT Consulting LLC** company owned, rented, leased or their personal vehicle, used for company business.

Cell Phone Use and Texting
There shall be no cell phone usage by any **PNT Consulting LLC,** CMV/CDL drivers while operating a company vehicle, unless that vehicle or the driver's phone is equipped with a "HandsFree" operating system. The commercial driver should pull over at a safe location and then return the phone call if necessary. There shall be NO TEXTING while driving by any one operating a vehicle (Fleet or CMV); the driver shall read or create texts only when stopped and parked in a safe location for him/her and the vehicle.

Driving Safety
While it's important to understand the company vehicle safety program, as a driver, you have to put safe driving techniques into practice each time you get behind the wheel. The following safe driving strategies are under the driver's control:
• Make sure the vehicle is safe to operate.
• Bring supplies you may need in case of an emergency.
• Wear your seat belt.
• Drive defensively, not aggressively.
• Pay attention to your driving, and avoid distractions.
• Only drive when you're alert and fully awake.
• Never drive under the influence of alcohol, medications, or illegal drugs.
Note: Seat belts are the single most effective means of reducing deaths and serious injuries in traffic crashes.

Vehicle inspections
Safe driving starts before you turn the ignition key. Always inspect the vehicle before you start your trip. Make sure:
• The vehicle does not have any visible damage that affects its safe operation.
• The tires are properly inflated (use the vehicle manufacturer's recommendations that are typically noted on a sticker inside the door, glove box, or trunk - the pressures stamped on the tire are not specific to the vehicle). Check the pressure when the tires are cold.
• Tires have sufficient tread depth (tread depth should be at least 1/16 inch).
• The vehicle's fluid levels are correct (oil, brake, transmission, battery, and wiper fluids).
• Belts and hoses are free of blisters, cracks, and cuts.
• The vehicle has plenty of fuel.
• The windshield wipers are in good condition and are functional.
• You are familiar with the location and operation of all the vehicle's controls; and the seat, steering wheel, and mirrors are properly adjusted.
• Headlights, brake lights, turn signals, emergency flashers, and interior lights are working.
• The seat belt is properly adjusted, and it's in good condition.
• The vehicle is equipped with an emergency kit.
• Loose objects are secured so they won't shift during a sudden stop or turn.

Plan for emergencies
In case of a breakdown or accident, your first actions should be to move the car to a safe area,

remain in the car (if there is no risk of fire or other danger), and call for help. Some basic provisions to include in an emergency supply kit can include:

• A phone and a list of emergency phone numbers.
• First aid supplies.
• Roadside warning triangles or flares (follow instructions for their safe use).
• A fire extinguisher.
• Water and food.
• Clothing (raincoat; warm clothing, hat, mittens/gloves; comfortable boots/shoes).
• Basic car maintenance tools (a flashlight with fresh batteries; battery jumper cables; a jack, lug nut wrench, and spare tire; water for the radiator; oil; windshield wiper fluid; rags; gloves; etc.).

Be defensive
It's best to always practice defensive driving techniques. Continually check your mirrors, leave enough following distance, and keep a cushion of space around the vehicle in case you need to quickly change lanes or go onto the shoulder. Aggressive driving acts include:
• Speeding.
• Tailgating.
• Failing to signal lane changes.
• Running red lights or stop signs.
• Passing on the right.
Aside from being aggressive, taking these actions can result in getting a ticket. The best advice is to share the road - allow other drivers to merge as needed. Safely move out of an aggressive driver's way; don't become part of a conflict.

Stay focused and alert
Driving is no time to multi-task. Stay focused on the road. Drivers can be distracted by a variety of things:
• Conversations with passengers.
• Eating, drinking, or grooming.
• Tuning the radio or selecting a CD to play.
• Reading maps or directions.
• Using electronic navigation systems.
• Using a cell phone.
• Get a full night of rest before driving.
• Stop and get out of the car to stretch and walk about every two hours.
• Set a realistic goal of how many miles you can safely drive each day.
• Avoid taking medications that cause drowsiness.

What to do in Case of an Accident
Stop at Once! Check for personal injuries and send for an ambulance, if needed. Do not leave the scene, but ask for the assistance of bystanders.
• If Fire or Smoke Is Present evacuate vehicle occupants to a safe location. If stalled on a railroad track, evacuate occupants to a safe location away and at a right angle from the tracks.

• If Fire, Smoke, or Spilled Fuel is Present send for the fire department. Do not leave the scene; ask a bystander to call the fire department. If possible, use a spill kit to absorb the spill.

Protect the Scene. Set emergency warning devices to prevent further injury or damage. Secure your vehicle and its contents from theft.
Secure Assistance of the police whenever possible. Record names and badge numbers. Do not leave without law enforcement presence on scene.
Record Names, Addresses, and Phone Numbers of all witnesses, injured and driver(s) and their passengers; record vehicle license numbers. Take complete pictures with cell phone or camera.
Do Not Argue! Make no statement except to the proper authorities and to Management. Sign only official police reports. Do not make statements regarding the operating condition of your vehicle and do not admit fault.
Report the Incident to Your Supervisor/Safety Manager IMMEDIATELY after first aid has been given, authorities have been notified, the scene has been protected and you are able to do so.
Complete the Incident Report at the scene (or with your Supervisor ASAP) and as thoroughly as possible. Make sure the Safety Manager gets copies of all incident paperwork and related information within 24 hours.
If You Strike an Unattended Vehicle and cannot locate the owner, leave a note with your name and the company's address and phone number, get the vehicle description, VIN number and license plate number.

A motor vehicle incident is a negative occurrence that involves a "covered" motor vehicle and that caused or could have caused injury, illness, or property damage.
All motor vehicle incidents will be investigated to determine their causes and whether or not the incidents were preventable. Understanding the root causes of incidents and why they are happening, regardless of fault, forms the basis for eliminating them in the future.

If any of the following traffic violations occur, whether in the drivers personal vehicle (on or off company business) or while operating a owned, rented, or leased vehicle, suspension of driving or operating any vehicle will be immediate:

• Operating a vehicle under the influence of a drug or alcohol
• Implied Consent Refusal (refusal to take blood alcohol test and or urine analysis) • Committing homicide, manslaughter or aggravated assault with a vehicle
• Failing to stop if you are involved in a traffic accident
• Reckless driving
• Felony speeding
• License Suspension or Revocation
• Cancellation of the employee's auto insurance by the employee's insurance carrier.
The above listed violations should not be considered all inclusive, and these are not the only major violations that would suspend the employee as a driver. Management reserves the right to make the final decision. **PNT Consulting LLC,** follows 49 CFR Subpart C 383.33 for CMV drivers. If the driver is found to not have reported to **PNT Consulting LLC** any traffic violation, suspension or revocation of their license, by reviewing their MVR on an annual basis or as often as deemed

necessary, the driver will be subjected to disciplinary action up to and including termination. It is the overall responsibility of all drivers to maintain proper and acceptable driving records and all licenses required for their position.

Drugs and Alcohol
In accordance with our Drugs and Alcohol Policy driving a company owned, rented, leased or personal vehicle on company business, while under the influence of drugs or alcohol shall result in immediate termination.

Training
Under no circumstances may an employee operate a covered motor vehicle until he/she has successfully completed this company's initial training on motor vehicle safety. Training is done by reading material and watching a presentation. The **PNT Consulting LLC** supervisor of that individual is responsible for conducting training, if he/she assigns that person to driving duties. **PNT Consulting LLC** requires a preceding 3-year, state issued, driving record (Motor Vehicle Report "MVR"), for each driver-applicant operating a vehicle which is company owned, rented, or leased as well as any personal vehicle used on Company business. If the driver has an out-of-state license, they will be required to submit their MVR from that state for our review. The MVR will be reviewed by a responsible management official for determination of qualification of each driver. **PNT Consulting LLC** shall also obtain a MVR on each driver thereafter on an annual basis.

The company training program includes the topics of driving that the particular driver will have to deal with. Through training we ensure that motor vehicle operators are knowledgeable in practices such as **PNT Consulting LLC** expectation; impaired, fatigued, aggressive, distracted, and defensive driving; seat belt use; vehicle inspection; security and motor vehicle incident procedures; cargo securement; handling hazardous materials and spills; and safety features and emergency equipment.

Driver training must include the following:
1. Pre-trip safety inspection;
2. Use of vehicle controls and equipment, including operation of emergency equipment;
3. Operation of vehicle, including turning, backing, braking, parking, handling, and vehicle characteristics including those that affect vehicle stability, such as effects of braking and curves, effects of speed on vehicle control, dangers associated with maneuvering through curves, dangers associated with weather or road conditions that a driver may experience (e.g., blizzards, mountainous terrain, high winds), and high center of gravity;
4. Procedures for maneuvering tunnels, bridges, and railroad crossings;
5. Requirements pertaining to attendance of vehicles, parking, smoking, routing, and incident reporting; and
6. Loading and unloading of materials, including—
(a) Compatibility and segregation of cargo in a mixed load;
(b) Package handling methods; and
(c) Load securement.

After an employee has completed the training program, management will determine whether the employee can safely operate a motor vehicle. If the employee passes, management places a training record in the employee's personnel file or DQ file.

Evaluation

Individual assigned management evaluates each trained operator to verify that the employee has retained and uses the knowledge and skills needed to operate safely. If the evaluation shows that the employee is lacking the appropriate skills and knowledge, the employee is retrained.
The Safety Manager also reviews motor vehicle records periodically to ensure that operators maintain a good driving record. The results of each check are made known to the GMs, HR and COO.
An operator may lose his/her privilege to operate a company vehicle for work or operate a company-owned-leased-rented vehicle for personal use, if after an incident(s), accident(s), or after a violation(s) it was discovered to be the driver's fault and preventable; the Safety manager may recommend the operator receive additional training if warranted.

Besides all the safety issues surrounding the driving of a commercial motor vehicle, there are other safety issues that can affect a driver. Examples of these are back strain and lifting concerns; slip-trip-falls; and personal safety in parking lots and other places.
Training and policy documents have been developed to address some of these driver safety topics.
It is inherent that problems may occasionally arise in this Motor Vehicle Safety Program. By having our program thoroughly evaluated, periodically and as necessary, and promptly taking action to correct any deficiencies in our program, we can eliminate problems effectively. Note: The occurrence of a motor vehicle incident does not in itself mean that the program is ineffective.
All employees have a general obligation to work and drive safely

NFPA 70E

1.0 Purpose and Scope

To ensure compliance with the Occupational Health and Safety Administration (OSHA) General Industry Regulations (29 CFR 1910.133 and 1910 Subpart S) and the National Fire Protection Agency Standard for Electrical Safety in the Workplace (2015 NFPA 70E) and the National Fire Protection Agency National Electrical Code (2014 NFPA 70).

To provide a practical safe working area for employees and contractors relative to the hazards arising from the use of electricity at all PNT Consulting LLC locations.

2.0 Definitions

2.1 Arc Flash Hazard

A dangerous condition associated with the possible release of energy caused by an electrical arc.

2.2 Arc Flash Hazard Analysis

A study investigating a worker's potential exposure to arc flash energy, conducted for the purpose of injury prevention and the determination of safe work practices, arc flash boundary, and the appropriate levels of personal protective equipment (PPE).

2.3 Arc Rating

The value attributed to materials that describes their performance to exposure to an electrical arc discharge. The arc rating is expressed in cal/cm2 and is derived from the determined value of the Arc Thermal Performance Value (ATPV), or Energy Breakopen Threshold (EBT) (Should a material system exhibit a Breakopen response below the APTV value).

2.4 Barricade

A physical obstruction such as tape, cones, or A-frame type wood or metal structures intended to provide a warning about and to limit access to a hazardous area.

2.5 Barrier

A physical obstruction that is intended to prevent contact with equipment or energized electrical conductors and circuit parts or to prevent unauthorized access to a work area.

2.6 Boundary, Arc Flash

When an arc flash hazard exists, an approach limit at a distance from a prospective arc source within which a person could receive a second degree burn if an electrical arc flash were to occur.

The arc flash boundary for systems 50 volts and greater shall be the distance at which the incident energy equals 1.2 cal/cm2. A second degree burn is possible by an exposure of unprotected skin to an electric arc flash above the incident energy level of 1.2 cal/cm2.

2.7 Boundary, Electrical Shock

The three (3) boundaries protecting personnel from an exposure to energized parts. The shock protection boundaries identified as (a) limited approach, (b) restricted approach and (c) prohibited approach boundaries shall be applicable where approaching personnel are exposed to energized electrical conductors or circuit parts. 2015 NFPA Table 130.4(C)(a) and Table 130.4(C)(b) shall be used for the associated voltages.

2.7.1 Limited Approach Boundary: An approach limit at a distance from an exposed energized electrical conductor or circuit part within which a shock hazard exists.

2.7.2 Restricted Approach Boundary: An approach limit at a distance from an exposed energized electrical conductor or circuit part within which there is an increased risk of shock, due to electrical arc-over combined with inadvertent movement, for personnel working in close proximity to the energized electrical conductor or circuit part.

2.7.3 Prohibited Approach Boundary: An approach limit at a distance from an exposed energized electrical conductor or circuit part within which work is considered the same as making contact with the electrical conductor or circuit part.

2.8 De-Energized

Free from any electrical connection to a source of potential difference and from electrical charge; not having a potential different from that of the earth.

2.9 Electrical Hazard

A dangerous condition such that contact or equipment failure can result in electric shock, arc flash burn, thermal burn or blast.

2.10 Energized

Electrically connected to, or is, a source of voltage

2.11 Exposed

Capable of being inadvertently touched or approached nearer than a safe distance by a person. It is applied to electrical conductors or circuit parts that are NOT suitably guarded, isolated, or insulated.

2.11 Ground-Fault Circuit-Interrupter (GFCI)

A device intended for the protection of personnel that functions to de-energize a circuit or portion thereof within an established period of time when a current to ground exceeds the values established for a Class A device. Class A ground-fault circuit-interrupters trip when the current to ground is 6mA or higher and do not trip when the current to ground is less than 4 mA.

2.12 Ground-Fault Interrupter (GFI)

A GFI is an equipment protector, unlike the GFCI which is a personnel protector. It is intended to protect the equipment from damaging line-to-ground fault currents by opening all ungrounded conductors of the faulted circuit.

2.12 Ground

An electrically conducting connection between equipment or an electric circuit and the earth or to another conducting body. A properly designed grounding system provides a reliable conducting path to earth or some other conducting body in place of the earth. This system provides a low impedance path for electric short circuits and faults enabling over-load protective devices to open the circuit. The grounding system maintains a common potential for grounded equipment at or near earth's potential level. It also provides a low impedance path for electrical short circuits, permitting large currents to pass through over-load protective devices permitting them to open.

2.13 Qualified Person

2.13.1 One who has skills and knowledge related to the construction and operation of the electrical equipment and installations and has received safety training to recognize and avoid the hazards involved.

2.13.2 A qualified person shall be trained and knowledgeable of the construction and operation of equipment or a specific work method and be trained to recognize and avoid the electrical hazards that might be present with respect to that equipment or work method. A person can be considered qualified with respect to certain equipment and methods but still unqualified for others.

2.14 Shock Hazard

A dangerous condition associated with the possible release of energy caused by contact or approach to energized electrical conductors or circuit parts.

2.15 Working On

Intentionally coming in contact with energized electrical conductors or circuit parts with hands, feet, or other body parts, with tools, probes or with test equipment, regardless of the personal protective equipment a person is wearing. There are two categories of "working on":

2.15.1 Diagnostic (testing): is taking readings or measurements of electrical equipment with approved test equipment that does not require making any physical change to the equipment.

2.15.2 Repair: is any physical alteration of electrical equipment, such as making or tightening connections, removing or replacing components, etc.

3.0 Procedure

3.1 This Compliance Work Instruction is designed to provide guidance and encompass safety-related work practices for qualified persons who work on or near exposed energized electrical conductors or circuit parts and familiarize unqualified persons with electrical safety work practices. It is the role of management to enforce this work instruction, including discipline for non-conformance.

3.2 A qualified person shall be familiar with the proper use of the special precautionary techniques, Personal Protective Equipment (PPE), 29 CFR1910.137 (Electrical Protective Equipment), including arc flash suit; insulating and shielding materials; and insulated tools and test equipment. A person may be considered qualified with respect to certain equipment and methods but still unqualified for others.

3.3 An employee, who is undergoing on-the-job training for the purpose of obtaining the skills and knowledge necessary to be considered a qualified person and who, in the course of such training, has demonstrated an ability to perform specific duties safely at his or her level of training, and who is under the direct supervision of a qualified person, shall be considered to be a qualified person for the performance of those specific duties.

3.4 Such persons permitted to work within the limited approach boundary of exposed energized conductors or circuit parts operating at 50 volts or more shall, at a minimum, be additionally trained in all of the following:

3.4.1 Skills and techniques necessary to distinguish exposed energized electrical conductors or circuit parts from other parts of electrical equipment.

3.4.2 Skills and techniques necessary to determine the nominal voltage of exposed energized electrical conductors or circuit parts.

3.4.3 Approach distances specified in NFPA Table 130.4(C)(a) and Table 130.4(C)(b) and the corresponding voltages to which the qualified person will be exposed.

3.4.4 Decision-making process necessary to determine the degree and extent of the hazard and the personal protective equipment and job planning necessary to perform the task safely.

4.0 Electrical Hazard Analysis

4.1 If the energized electrical conductors or circuit parts operating at 50 volts or more are not placed in an electrically safe work condition, other safety-related work practices shall be used to protect employees who might be exposed to electrical hazards involved. Such work practices shall protect each employee from arc flash and from contact with energized electrical conductors or circuit parts operating at 50 volts or more directly with any part of the body or indirectly through some other conductive object.

4.2 Before an employee works within the limited approach boundary or arc flash boundary of exposed energized electrical conductors or circuit parts that are not put into an electrically safe work condition, work, excluding diagnostics, to be performed shall be considered energized electrical work and shall be performed by written permit only. 4.3 Work practices that are used shall be suitable for the conditions under which the work is to be performed and for the voltage level of energized electrical conductors or circuit parts.

4.4 Appropriate safety-related work practices shall be determined before any person is exposed to the electrical hazards involved by using both shock hazard analysis and arc flash hazard analysis.

5.0 Arc Flash Hazard Analysis

5.1 An arc flash hazard analysis shall determine the arc flash boundary, the incident energy at the working distance, and the personal protective equipment that people within the arc flash boundary shall use.

5.2 The arc flash hazard analysis shall be updated when a major modification or renovation takes place. It shall be reviewed periodically, not to exceed five (5) years, to account for changes in the electrical distribution system that could affect the results of the arc flash hazard analysis.

5.3 If the analysis is not available or has not been completed, the requirements of 2015 NFPA 70E 130.7(C)(15) and 130.7(C)(16) shall be used in lieu of determining the incident energy at the working distance**.**

6.0 Electrical Hazard Protection Boundaries

6.1 A shock hazard analysis shall determine the voltage to which personnel will be exposed, the boundary requirements, and the personal protective equipment necessary in order to minimize the possibility of electric shock to personnel.

6.2 Barricades shall be used in conjunction with safety signs where it is necessary to prevent or limit employee access to work areas containing energized electrical conductors or circuit parts. Barricades shall be placed no closer than the limited approach boundary.

6.3 If signs and barricades do not provide sufficient warning and protection from electrical hazards, an attendant shall be stationed to warn and protect employees. An attendant shall remain in the area as long as there is a potential for employees to be exposed to the electrical hazard**.**

7.0 Personal Protective Equipment

2015 NFPA 70E Table 130.7(C)(16) shall be used to determine the required personal protective equipment for the specific task, once the Hazard/Risk Category has been identified from the Arc Flash Hazard Analysis or 2015 NFPA 70E Table 130.7(C)(15)(a) and Table 130.7(C)(15)(b), including associated notes, and requirements of 2015 NFPA 70E 130.7(C)(15).

7.1 The personal protective equipment requirements of 2015 NFPA 70E are intended to protect a person from arc flash and shock hazards. While some situations could result in burns to the skin, even with the protection described in 2015 NFPA Table 130.7(C)(16), burn injury should be reduced and survivable.

7.2 One of the first lines of defense when it comes to preventing contact with energized electrical components and/or electrical power lines are rubber insulating gloves, commonly known as High Voltage Gloves . High Voltage Gloves must meet the requirements of the current ASTM D120 specifications and NFPA 70E standards. OSHA enforces these requirements as a part of their CFR 1910.137 regulation. These standards dictate manufacturing criteria as well as testing and retesting requirements for Lineman Gloves. 7.2.1 OSHA requires the use of rubber insulated gloves for those persons working on or near energized circuits and/or other electrical sources that are considered either high or low-voltage applications. That means there are many other occupations that need to use rubber insulated gloves as well, such as HVAC Technicians, Automotive Technicians, Electricians, Maintenance Mechanics, Railway Technicians, and even Telecommunications personnel.

7.2.2 OSHA regulation ***29 CFR 1910.137*** requires that all insulating gloves must be electrically tested before first issue and retested every six months thereafter. OSHA 1910.268 (Tele-com) – Natural rubber insulating gloves must be electrically tested before first issue, twelve months after first issue, and every 9 months thereafter. Any unused glove that has not been tested within twelve months must be retested before being used.

7.3 At PNT Consulting LLC each electrician has been issued (2) pairs of electrical gloves - one black, one red. On a rotation of every 6 months one set of gloves are collected and sent in for testing, while the others remain in use. Currently Paul B Harvey administers the glove collection

for testing. April through September RED gloves should be used, and October through March BLACK gloves should be used. 7.4 Daily Safety Inspections: Rubber insulating gloves should be visually inspected before each day's use and also after any situation that may have possibly caused damage to the gloves. Care and maintenance is critical to ensure an insulated glove retains its protection properties. 7.4.1 Manufacturers suggest gloves be stored out of direct sunlight, in a cool and dry location away from sources of ozone. They should be stored in a glove bag (one pair per bag) and then hung-up versus being laid down on a flat surface. Rubber insulated gloves should never be folded in the storage bag. Creasing insulated gloves may cause cracking which could shorten the useful life of the gloves. 7.4.2 Before use, gloves should be visually inspected for tears, holes, signs of abrasion, ozone damage or possible chemical contact. (ASTM, F1236 standard provides inspection details). In addition, OSHA requires an air-glove inflation test as a part of the inspection process.

8.0 Electrical Hazard Approach Boundaries

The shock protection boundaries identified as limit approach, restricted approach, and prohibited approach boundaries shall be applicable where approaching personnel are exposed to energized electrical conductors or circuit parts. 2015 NFPA 70E Table 130.4(C)(a) and Table 130.4(C)(b) shall be used for the distance associated with system voltages.

In certain instances, the arc flash boundary might be a greater distance from the energized electrical conductor or circuit parts than the limited approach boundary. The shock protection boundaries and the arc flash boundary are independent of each other.

8.1 Limited Approach Boundary. When one or more unqualified persons are working at or close to the limited approach boundary, the designated person in charge of the work space where the electrical hazard exists shall advise the unqualified person(s) of the electrical hazard and warn him or her to stay outside of the limited approach boundary.

8.1.1 Unless permitted by 2015 NFPA 70E 130.4(D)(2), no unqualified person shall be permitted to approach nearer than the limited approach boundary of energized electrical conductors or circuit parts.

8.1.2 Where there is a need for an unqualified person(s) to cross the limited approach boundary, a qualified person shall advise him or her of the possible hazard and continuously escort unqualified person(s) while inside the limited approach boundary**.**

8.2 Restricted Approach Boundary. Under no circumstance shall the escorted unqualified person(s) be permitted to cross the restricted approach boundary.

8.2.1 An employee who is undergoing on-the-job training for the purposes of obtaining the skills and knowledge necessary to be considered a qualified person and who, in the course of such training, has demonstrated an ability to perform specific duties safely at his or her level of training, and who is under the direct supervision of a qualified person, shall be considered to be a qualified person for the performance of those specific duties.

8.2.2 No qualified person shall approach or take any conductive object closer to exposed energized electrical conductor or circuit parts operating at 50 volts or more than the restricted approach boundary set forth in 2015 NFPA 70E Table 130.4(C)(a) and Table 130.4(C)(b), unless the requirements are met for the specific listed applications of 2015 NFPA 70E 130.4(C).

8.2.3 To cross the restricted approach boundary and enter the restricted space, qualified persons must do the following:

1) Have a plan that is documented and approved by authorized foreman or supervisors

2) Use PPE that is appropriate for working near exposed energized conductors or circuit parts and is rated for the voltage and energy level involved

3) Be certain that no part of the body enters the prohibited space

4) Minimize the risk from inadvertent movement by keeping as much of the body out of the restricted space as possible, using only protected body parts in the space necessary to accomplish the work

8.3 Prohibited Approach Boundary. Crossing the prohibited approach boundary and entering the prohibited space is considered the same as making contact with exposed energized conductors or circuit parts.

8.3.1 To cross the prohibited approach boundary, qualified persons must do the following:

1) Have specified training to work on energized conductors or circuit parts

2) Have a documented plan justifying the need to work close to exposed energized conductors or circuit parts

3) Perform a risk analysis

4) Have the plan and the risk analysis approved by authorized foreman or supervisor

5) Use PPE that is appropriate for working near exposed energized conductors or circuit parts and is rated for the voltage and energy level involved

9.0 De-Energized Parts (Electrically Safe Work Condition)

Energized electrical conductors and circuit parts to which an employee might be exposed shall be put into an electrically safe work condition before an employee performs work.

All electrical circuit conductors and circuit parts shall be considered energized until the source(s) of energy is (are) removed, at which time they shall be considered de-energized. All electrical conductors and circuit parts shall not be considered to be in an electrically safe work condition until all of the applicable requirements of paragraph 10.3 have been met.

9.1 Energized electrical conductors or circuit parts that operate at less than 50 volts shall not be required to be de-energized where the capacity of the source and any overcurrent protection between the energy source and the worker are considered and it is determined that there will be no increased exposure to electrical burns or to explosion due to electric arcs.

9.2 During the time an employee may be exposed to contact with parts of fixed electrical equipment or circuits which have been de-energized, the circuits energizing the parts shall be locked out in accordance with PNT Consulting LLC Lockout/Tagout Program.

9.3 Conductors and parts of electric equipment that have been de-energized but have not been locked out shall be treated as energized.

9.4 Interlocks for electric equipment shall not be used as a substitute for lockout procedures.

10.0 Work on De-energized Equipment

10.1 PNT Consulting LLC shall identify, document and implement lockout/tagout procedures conforming to 2015 NFPA 70E Article 120 to safeguard employees from exposure to electrical hazards. The lockout/tagout procedure shall be appropriate for the experience and training of the employees and conditions as they exist in the workplace.

Energized electrical conductors or circuit parts to which an employee might be exposed shall be put into an electrically safe work condition before an employee performs work if either of the following conditions exists:

1) The employee is within the limited approach boundary

2) The employee interacts with equipment where conductors or circuit parts are not exposed, but an increased risk of injury from an exposure to an arc flash hazard exists

When a qualified person is working within the limited approach boundary or the arc flash boundary that are not placed into an electrically safe work condition, an energized electrical work permit shall be completed

> Examples of *increased or additional hazards* include, but are not limited to, interruption of life support equipment, deactivation of emergency alarm systems, and shutdown of hazardous location ventilation equipment.
>
> Examples of work that may be performed on or near energized circuit parts because of *infeasibility due to equipment design or operational limitations* include performing diagnostics and testing of electric circuits that can only be performed with the circuit energized and work on circuits that form an integral part of a continuous process that would otherwise need to be completely shut down in order to permit work on one circuit or piece of equipment.

10.1.1 Electrical conductors or circuit parts that have been disconnected, but not under lockout; tested; and grounded (where applicable) shall not be considered to be in an electrically safe work condition, and safe work practices appropriate for the circuit voltage and energy level shall be used.

Lockout requirements shall apply to fixed, permanently installed equipment; to temporarily installed equipment; and to portable equipment.

10.2 All electrical conductors or circuit parts shall be considered energized until the source(s) of energy is (are) removed, at which time they shall be considered de-energized. All electrical conductors and circuit parts shall not be considered to be in an electrically safe work condition until all of the applicable requirements of 2015 NFPA 70E Article 120.1 have been met.

10.3 Establishing an electrically safe work condition:

10.3.1 Determine all possible sources of electrical supply to the specific equipment. Check applicable up-to-date drawings, diagrams, and identification tags

10.3.2 After properly interrupting the load current, open the disconnecting device(s) for each source.

10.3.3 Wherever possible, visually verify that all blades of the disconnecting devices are fully open or that drawout-type circuit breakers are withdrawn to the fully disconnected position

10.3.4 Apply lockout/tagout devices in accordance with the PNT Consulting LLC Lockout/Tagout Program.

10.3.5 Use an adequately rated voltage detector to test each phase conductor or circuit part to verify they are de-energized. Test each phase conductor or circuit part both phase-to-phase and phase-to-ground. Before and after each test, determine that the voltage detector is operating satisfactorily.

10.3.6 Where the possibility of induced voltages or stored electrical energy exists, ground the phase conductors or circuit parts before touching them. Where it could be reasonably anticipated that the conductors or circuit parts being de-energized could contact other exposed energized conductors or circuit parts, apply ground connecting devices rated for the available fault duty.

10.4 Re-Energizing Equipment. Prior to re-energizing circuits or equipment, even temporarily, the following requirements shall be met in the order listed:

10.4.1 A qualified person shall verify that all tools, electrical jumpers, shorts, grounds, and other similar devices have been removed so the circuits and equipment can be safely energized, including removal of equipment interlock-defeating devices.

10.4.2 Individuals exposed to the hazards associated with re-energizing the circuit or equipment shall be warned to stay clear of circuits and equipment.

10.4.3 All lockout equipment shall be removed as specified in the Lockout/Tagout Program.

10.4.4 A visual check shall be made to ensure all individuals are clear of the circuits and equipment.

10.4.5 Where appropriate, protective covers, shields, shrouds and other guarding shall be secured, unless specific maintenance guidance states otherwise.

11.0 Energized Electrical Work Exception

11.1 If the exposed energized parts cannot be de-energized, an equivalent level of safety shall be provided to protect employees who may be exposed to the electrical hazards involved.

Only qualified personnel may work within the Limited Approach Boundary on electrical conductors or circuit parts or equipment that have not been de-energized.

They shall be properly trained regarding working safely on energized circuits and shall be familiar with the proper use of special precautionary techniques, personal protective equipment, insulating and shielding materials and insulated tools.

Energized electrical conductors or circuit parts are to be de-energized in accordance with established lockout/tagout procedures, unless one of the following conditions applies:

11.1.1 Energized work shall be permitted where it can be demonstrated that the task to be performed introduces additional hazards or increased risk.

Examples of additional hazards or increased risk include, but not limited to, interruption of life-support equipment, deactivation of emergency alarm systems, and shutdown of hazardous location ventilation equipment.

11.1.2 Energized work shall be permitted where it can be demonstrated that the task to be performed is infeasible in a de-energized state due to equipment design or operational limitations.

11.1.3 Energized electrical conductors or circuit parts that operate at less than 50 volts shall not be required to be de-energized where the capacity of the source and any overcurrent protection between the energy source and the worker are considered and it is determined that there will be no increased exposure to electrical burns or to explosion due to electric arcs.

11.2 Energized Electrical Work Permit: When working within the limited approach boundary or the arc flash boundary of exposed energized electrical conductors or circuit parts that are not placed in an electrically safe work condition, work to be performed shall be considered energized electrical work and shall be performed by written permit only. The intent of the permit is to ensure that all appropriate safety precautions have been taken prior to starting energized electrical work.

11.2.1 Work performed within the limited approach boundary of energized electrical conductors or circuit parts by qualified persons related to tasks such as testing, troubleshooting, and voltage measuring shall be permitted to be performed without an energized electrical work permit, if appropriate safe work practices and PPE are provided and used.

If the purpose of crossing the limited approach boundary is only for visual inspection and the restricted approach boundary will not be crossed, then an energized electrical work permit shall not be required.

11.2.2 The permit must be completed by the employee(s) participating in the work, and signed by a foreman or supervisor who has completed the Qualified Person Training within the last twelve (12) months.

11.2.3 The permit must be posted in the area of the work throughout the duration of the task.

11.2.4 The completed permit shall be provided to the Plant Safety Coordinator at the completion of the task for retention.

12.0 Overhead Lines

12.1 Work near overhead lines shall be avoided whenever possible. If work near overhead lines must be performed, the lines shall be considered to be energized and the requirements for working near energized equipment shall be followed.

12.2 Emergency switches must be located to shut down the grid to overhead lines that employees will be working on or near.

12.3 When working near an energized overhead line, no part of a vehicle and/or mechanical equipment shall come within 10 feet of the line. This distance shall be increased by 4 inches for every 10 kV over 50kV.

13.0 Lighting

13.1 Where lack of illumination or an obstruction precludes observation of the work to be performed, employees shall not perform any task within the limited approach boundary of energized electrical conductors or circuit parts operating at 50 volts or more or where an electrical hazard exists.

13.2 A portable light can be used to provide light and should be made of non-conducting material to avoid shorting conductors together. The flexible cord of a portable light should not be pinched, kinked, cracked or cut, exposing live wires or parts.

13.3 An individual shall not reach blindly into areas that may contain energized electrical conductors or circuit parts where an electrical hazard exists.

14.0 Confined or Enclosed Work Spaces

14.1 Individuals working in a confined or enclosed space that contains exposed energized electrical conductors or circuit parts operating at 50 volts or more, or where an electrical hazard exists, the employee shall use protective shields, protective barriers, or insulating materials as necessary to avoid inadvertent contact with these parts and the effects of the electrical hazard.

> *Example: Individual working inside of a main feed cabinet, the conductors feeding the cabinet must be covered to prevent accidental contact.*

14.2 Doors, hinged panels, and the like shall be secured to prevent their swinging into an employee and causing the employee to contact exposed energized electrical conductors or circuit parts operating at 50 volts or more or where an electrical hazard exists if movement of the door, hinged panel, and the like is likely to create a hazard.

15.0 Conductive Materials and Equipment

15.1 Conductive materials, tools and equipment that are in contact with any part of an employee's body shall be handled in a manner that prevents accidental contact with energized electrical conductors or circuit parts.

15.2 Means shall be employed to ensure that conductive materials approach exposed energized conductors and circuit parts no closer than that permitted by 2015 NFPA 70E 130.2. ***2015***

15.3 Conductive Articles of jewelry and clothing (e.g., watch bands, bracelets, rings, key chains or metal headgear) shall not be worn where they present an electrical contact hazard with exposed energized electrical conductors or circuit parts.

16.0 Use of Portable Electric Equipment

16.1 Portable electric equipment such as drills, saws, grinders, and portable lights shall be used in a safe manner and be connected to a circuit protected by GFCI capability if being used in a wet or damp environment (i.e., circuit breaker or separately enclosed, portable GFCI). The following guidelines provide minimum requirements for the use of this type of equipment.

16.2 All cord and plug-connected electrical equipment, flexible cord sets (extension cords), and portable electric equipment shall be handled in a manner that will not cause damage.

16.3 Multiple outlets shall not be "daisy-chained" to one another.

16.4 Use of extension cords in combination with power strips shall not be permitted.

16.5 Flexible electrical cords connected to equipment shall not be used for raising or lowering the equipment.

16.6 Flexible cords may not be fastened with staples or otherwise hung in a fashion that could damage the outer jacket or insulation.

16.7 Portable cord- and plug-connected equipment and extension cords shall be visually inspected for external defects such as loose parts, deformed and missing pins, burns or scorch marks, or damage to the outer jacket or insulation as evidence of possible internal damage such as signs of pinching or crushing before use.

16.8 If there is evidence of damage that might expose an employee to injury, the defective or damaged item shall be removed from service and not used until repaired and tested to ensure the equipment is safe.

16.9 Whenever an attachment plug is to be connected to a receptacle (including extension cords), the plug end and the receptacle shall be checked to ensure they are of proper configurations and the fit is snug.

16.10 An extension cord used with grounding-type equipment shall contain an equipment grounding conductor.

16.11 Plugs and receptacles may not be connected or altered in a manner that would prevent proper continuity of the equipment grounding conductor at the point where plugs are attached to receptacles. (Do not cut off the ground prong on a plug) Additionally, those devices may not be altered to allow the grounding pole of a plug to be inserted into slots intended for connection to the current-carrying conductors.

16.11.1 Adapters that do not allow continuity of the equipment grounding connection may not be used.

16.12 Portable electric equipment and extension cords used in highly conductive work locations (such as areas with standing water), or in job locations where employees are likely to contact water shall be approved for those locations and GFI protected.

16.13 Employees' hands may not be wet when plugging and unplugging flexible cords and cord- and plug-connected equipment if energized equipment is involved.

16.13.1 Energized plug and receptacle connections may be handled only with insulated gloves if the condition of the connection could provide a conducting path to the employee's hand. For example, a cord connector is wet from being immersed in water.

16.14 Locking-type connectors shall be properly secured after connection.

16.15 All equipment shall have U.L. approval.

16.16 Safety inspections in the plant shall include testing and inspection of electrical receptacles, cords and plugs to ensure that all ground circuits, pins, and sockets are properly wire and are in good repair and operating condition. Adapters that permit the ground pin of an electrical plug to be by-passed shall not be used. All electrical cords must not be frayed and must be in good repair.

17.0 Electric Power and Lighting Circuits

17.1 Load rated switched (light switch), electrical disconnects, and circuit breakers specifically designed as a disconnecting means shall be used for the routine opening, reversing, or closing of circuits under load conditions.

17.2 Cable connectors not of the load-break type, fuses, terminal lugs, and cable splice connections may not be used to disconnect a circuit under load except in an emergency.

17.3 After a circuit is de-energized by the automatic operation of a circuit protective device, the circuit shall not be manually re-energized until it has been determined that the equipment and circuit can be safely energized.

17.4 Repetitive resetting of circuit breakers or re-energizing circuits through replaced fuses is prohibited.

17.5 Over current protection of circuits and conductors may not be modified, not even on a temporary basis, beyond that permitted by applicable portions of electrical codes and standards dealing with overcurrent protection.

18.0 Test Instruments and Equipment

18.1 Only qualified persons shall perform tasks such as testing, troubleshooting and voltage measuring within the limited approach boundary of energized electrical conductors or circuit parts operating at 50 volts or more or where an electrical hazard exists.

18.1.2 Test instruments, equipment, and their accessories shall be rated for the circuits and equipment to which they will be connected. Test instruments and equipment and all associated test leads, cables, power cords, probes and connectors shall be visually inspected for external defects and damage before each use.

18.1.3 If there is a defect or evidence of damage that might expose an employee to injury, the defective or damaged item shall be removed from service, and no employee shall use it until repairs and tests necessary to render the equipment safe have been made.

19.0 Personal Protective Equipment

19.1 Individuals shall be provided and shall use electrical protective equipment that is appropriate for the type of work to be performed.

19.2 If the insulating capability of protective equipment may be subject to damage during use, the insulating material shall be protected, for example, an outer covering of leather when it is used for the protection of rubber insulating material.

19.3 Employees shall wear non-conductive head protection wherever there is a danger of head injury from electric shock or burns due to contact with exposed energized parts.

19.4 Employees shall wear protective equipment for the eyes or face wherever there is danger of injury to the eyes or face from electric arcs or flashes or from flying objects resulting from electrical explosion.

19.5 Employees shall wear protective face and body equipment when working on equipment using chemicals such as battery acid or caustic fluids.

19.6 Employees shall wear approved protective equipment when working on equipment with live voltages over 50 volts.

19.7 Employees shall wear Arc Rated clothing with sleeves rolled down.

20.0 General Protective Equipment and Tools

20.0 Before an employee works within the limited approach boundary, energized conductors and circuit parts to which an employee might be exposed shall be put into an electrically safe work condition, unless work on energized components can be justified. According to 2015 NFPA 70E Article 130.2(A).

20.1 Only qualified persons shall be permitted to work on electrical conductors or circuit parts that have not been put into an electrically safe work condition.

20.2 Fuse handling equipment, insulated for the circuit voltage, shall be used to remove or install fuses when the fuse terminals are energized.

20.3 Before removing any fuse from a circuit, be sure the switch for the circuit is open or disconnected. When removing fuses, use an approved fuse puller and break contact on the hot side of the circuit first.

When replacing fuses, install the fuse first into the load side of the fuse clip, then into the line side.

20.4 Ropes and "fish tapes" used near exposed energized parts shall be non-conductive.

20.5 Protective shields, protective barriers or insulating materials shall be used to protect individuals working near exposed energized parts which might be accidentally contacted or where dangerous electric heating or arcing might occur.

20.6 Portable ladders used by employees, in areas where the employee or ladder could contact the exposed energized parts, shall have nonconductive side rails and comply with OSHA 1910.25 and 1910.26.

21.0 Alerting Techniques

The following techniques shall be used to warn and protect employees from hazards which could cause injury due to electric shock, burns, blasts or failure of electric equipment parts.

21.1 Safety signs, safety symbols, or accident prevention tags shall be used, where necessary, to warn individuals about electrical hazards in their work area. Signs, symbols and tags shall conform to the requirements of 29 CFR 1910.145, "Specifications for Accident Prevention Signs and Tags."

Typical signs warning of electrical hazards include Red, Danger signage with the words:

"Danger - Arc Flash" (To be determined by Arc Flash analysis)

“Caution – Arc Flash” (To be determined by Arc Flash analysis)

"Danger - High Voltage" (All equipment with voltages exceeding 600 volts)

"Danger - High Voltage - Authorized Personnel Only" (Entrances to areas with voltages exceeding 600 volts)

"Danger - Electric Shock Hazard, When Door Open" (All panels that have door/interlock)

21.2 Barricades shall be used in conjunction with safety signs where it is necessary to prevent or limit employee access to work areas exposing individuals to non-insulated energized equipment.

21.3 Conductive materials shall not be used for barricades where they might cause an electrical contact hazard.

21.4 If signs and barricades do not provide sufficient warning and protection from electrical hazards, a safety observer or qualified person shall be stationed to warn and protect individuals from the potential hazard.

22.0 Clearances

22.1 A minimum of three (3) feet shall be maintained in front of all 0-150 volt electrical panels that may be accessed periodically to perform maintenance on a circuit or to de-energize a circuit in an emergency. A minimum of four (4) feet clear access to the front of all 151-600 volt panels shall be maintained.

22.2 Outside of an electrical panel, the workspace may not be less than thirty (30) inches wide in front of the electric panel, and six (6) feet six (6) inches from ground to overhead. Distances will be measured from the front of the enclosure (or opening) of the enclosed live parts. The door must be able to fully open.

23.0 Grounding

23.1 Grounding systems are intended to decrease risk of electric shock to the human body from equipment and wiring.

23.2 An Equipment Grounding Conductor (EGC) originating at the service equipment entrance or at the location of a separately derived system shall connect all non-current carrying metal equipment, enclosures, conduits, fittings, and metal outlets. This will provide the necessary electrical continuity required for the over-current devices to trip.

23.3 The ground conductor shall be color coded green, green with a tracer color, or bare copper in accordance with the National Electrical Code (NEC).

23.4 Grounding conductors must be installed on all electrical equipment, including metal outlets and junction boxes, to comply with NEC and 29 CFR 1910.304 requirements.

23.5 The only neutral-to-ground bond shall be at the service entrance and any separately derived source. The neutral and ground should be kept separate at all sub-panel boards and junction boxes. The only two locations where the neutral and ground are bonded together is at the main service entrance and at the secondary side of a separately derived system.

23.6 Down line neutral-to-ground bonds result in parallel paths for the load return current where one of the paths becomes the ground circuit. This can cause a malfunction of protective devices and is a direct violation of the NEC.

23.7 The Ground Electrode Conductor (GEC) will connect this neutral-to-ground bond to the facilities ground reference.

24.0 Ground-Fault Circuit-Interrupter (GFCI)

24.1 GFCI devices shall be used in wet or damp environments, or any other similar conditions, where the human body could accidentally come into contact with energized wiring or equipment and ground.

24.2 All out-of-doors maintenance work must be done with GFCI connections. At a minimum, NEC and local electrical code requirements shall be followed.

24.3 It is recommended that GFCI devices be self-tested with the testing indicator on GFCI device before each use to determine at what amperage the circuit trips.

25.0 Ground-Fault Protection

GFP shall be used when there is a requirement to protect equipment from damaging line-to-ground fault currents by opening all ungrounded conductors of the faulted circuit.

GFI devices shall be used in wet or damp locations. GFP is addressed in the NFPA 70, which requires the installation of all solid-grounded wye electrical services of more than 150 volts to ground, but not exceeding 1000 volts, phase to phase for each service disconnect rated 1000 amperes or more.

26.0 Training

Training applies to all employees who face a risk of electrical shock or injury when they are working on or near exposed energized parts, or parts that may become energized. Initial training shall be given upon assignment to a position requiring an individual to work with or in close proximity to exposed electrical parts, equipment, or conductors as a regular part of his/her job. Refresher training shall be given if there is a significant change in this procedure or work practices.

26.1 Employees shall, at a minimum, be trained in, possess the knowledge of, and/or be familiar with the following to become **"Qualified"** ***personnel:***

26.1.1 The skills and techniques necessary to distinguish exposed live parts from other parts of electrical equipment. Understanding the specific hazards associated with electrical energy, to include the results of the Arc Flash Hazard Assessments.

26.1.2 The skills and techniques necessary to determine the nominal voltage of exposed live parts.

26.1.3 The clearance distances specified in 29 CFR 1910.33, NFPA 70E Table 130.2(C)(a) and Table 130.4(C)(b) and the corresponding voltages to which the "Qualified Person" will be exposed.

26.1.4 Safety related work practices required by 29 CFR 1910.331-335 that pertain to his/her respective job assignments.

26.1.5 The requirements specified in this Work Instruction.

26.1.6 Proper Lockout and Energy control procedures for the equipment they are working on.

26.1.7 To identify and understand the relationship between electrical hazards and possible injury.

26.1.8 Instructions on how to read and interpret the Arc Flash warning labels.

26.1.9 The PPE required for each Hazard Risk Category. How to use and care for the PPE properly.

26.1.10 First Aid training dealing specifically with victims of electrical accidents.

26.2 **"Unqualified" employees** must have awareness level training that includes:

26.2.1 Warning signs indicating electrical hazards.

26.2.2 The safe use of portable equipment.

26.2.3 Emergency notification procedures.

26.2.4 Any electrical safety-related practices necessary for their safety.

27.0 **Host and Contract Employers Responsibilities**

27.1 PNT Consulting LLC shall inform contractors performing work on or near exposed energized electrical conductors or circuit parts of the hazards and safe related work practices as outlined in this document. All approved contractors participate in annual training and a copy of this work instruction is provided on the company web site.

27.2 Contractors are instructed to advise PNT Consulting LLC of the following:

27.2.1 Any unique hazards presented by the contract employer's work

27.2.2 Hazards identified during the course of work by the contract employer that were not communicated by the host employer.

27.2.3 The measures the contractor took to correct any violations reported by the host employer to prevent it from recurring.

27.3.4 New conditions related to contracted work

27.3 Contractors are also required to complete a documented Pre Job Meeting (documented)

27.3.1.1.1 Exchange of electrical safety programs

27.3.1.2 Means/methods for reporting violations

27.3.2 Requirement for energized work permit

27.3.2.1 Energized Electrical Work Permit: **When working within the limited approach boundary or the arc flash boundary of exposed energized electrical conductors or circuit parts that are not placed in an electrically safe work condition, work to be performed shall be considered energized electrical work and shall be performed by written permit only.** The intent of the permit is to ensure that all appropriate safety precautions have been taken prior to starting energized electrical work

27.3.3 Required additional PPE

NFPA 70E

ENERGIZED ELECTRICAL WORK PERMIT

Part I: TO BE COMPLETED BY THE REQUESTER: Job/Work Order Number_____

(**1**) Description of circuit/equipment/job location: _____

_____

(**2**) Description of work to be done: _____

_____

(**3**) Justification of why the circuit/equipment cannot be de-energized or the work deferred until the next scheduled outage:_____

_____

_____

_____ _____

Requester/Title Date

Part II: TO BE COMPLETED BY THE ELECTRICALLY QUALIFIED PERSONS *DOING* THE WORK:

(**1**) Description of the Safe Work Practices to be employed: _____

_____

(**2**) **Shock Hazard Analysis:** Voltage Level Phase to Phase _____

Approach Boundaries: Limited _____ Restricted _____ Prohibited _____

(**3**) **Results of Flash Hazard Analysis:**

Flash Protection Boundary: _____ (Assumed or Calculated)

Hazard/Risk Category _____ **OR** Calculated Flash Hazard at 18" _____

(**4**) Necessary personal protective equipment to safely perform the assigned task: _____

_____

(**5**) Means employed to restrict the access of unqualified persons from the work area: _____

_____

(**6**) Evidence of completion of a Job Briefing including discussion of any job-related hazards: _____

_____

_____

(**7**) Do you agree the above described work can be done safely? **YES** / **NO** (circle: If *no* return to requester)

_____	_____	_____	_____
Electrically Qualified Person(s)	Date	Electrically Qualified Person(s)	Date

Part III: APPROVAL(S) TO PERFORM THE WORK WHILE ELECTRICALLY ENERGIZED:

_____	_____
Approving Supervisor	Date

Part IV: DOCUMENATATION OF ELECTRICALLY ENERGIZED WORK:

I understand that the above Energized Work was completed on the following date: _____

_____

Administrative Supervisor

NOTE: Once work is complete, forward a copy of this form to Paul B Harvey.

1.

NORM

1.0 PURPOSE

EXPOSURE PREVENTION FROM NATURALLY OCCURING RADIOLOGICAL MATERIALS (NORM)

Background/Introduction:

Naturally occurring radiological materials (NORM) is all around us. It is naturally present in our environment, generated by cosmic, terrestrial and human sources. NORM is present in rock formations, soil, groundwater, coal / oil, and natural gas deposits. Exposure to NORM is continual and accumulative.

Radon is a radioactive gas with a boiling point and vapor pressure similar to that of propane, resulting in higher concentrations of radon in natural gas liquids. Radon decays to low-level particulate radioactive lead-210, bismuth-210 and polonium-210, and can cause concentrated or accumulated quantities in or around Company work areas.

Levels of natural or background radiation vary greatly depending on location.. Approximately one-half of a U.S. person's total annual average radiation exposure comes from natural sources. The average annual radiation exposure from natural occurring sources is about 3.1 millisieverts (mSv). Radon and Thoron gases account for two-thirds of this exposure, while cosmic, terrestrial, and internal radiation account for the remainder (Although no adverse health effects have been discerned from doses arising from these sources of natural radiation exposure and NORM).

The potential for buildup of NORM substances is some Company work sites. Examples of these sites include;

- Pipelines possessing residual hydrocarbons like propane, butane, demethanized mix and natural gasoline.
- Hydrocarbon process vessels
- Hydrocarbon storage tanks
- Geothermal process equipment and waste streams

Regulations:

COMPANY has adopted the prescribed exposure prevention measures outlined in Title 29 CFR 1910.1096; although employee exposures are not anticipated to exceed the defined annual average radiation exposures of natural occurring radiation.

Purpose:

NORM

This procedure establishes a baseline process to educate and protect our workforce from the potential harmful effects of radiation exposure in excess of background levels. This is accomplished by establishing assessment, mitigation measures and implementation strategies to be implemented when historical and/or facility information indicates NORM is likely present.

4.0 Scope:

This section applies to all field operations personnel performing work in an environment known, or suspected, to contain NORM. Project Management (PM) and Supervision are primarily responsible for ensuring work areas are free of NORM that may potentially exceed natural occurring dose thresholds.

Responsibilities:

a. The EHS Manager is responsible for ensuring this policy is fully implemented and executed when site specific information and a job hazard analysis (JHA) indicates the presence of NORM.

b. The designated EHS Coordinator for each project location is primarily responsible for conducting a field survey, including an assessment for NORM exposure, and conduct all necessary field monitoring /testing to determine the level of radiation in the planned work area. The results shall be reported to the EHS Manager.

c. The EHS Manager will consult with the company's Certified Industrial Hygienist (CIH).

d. Before any work activities begin, the designated CIH must approve;

(1) Any exposure control plans

(2) The sampling methods and verify sampling equipment is properly calibrated.

e. COMPANY PMs must;

(1) Ensure an initial survey is conducted where radiation exposure is suspected,

(2) Ensure employees are informed of the potential hazards and the safeguarding required for the intended operation.

(3) Work closely with EHS Coordinators to confirm the identified Personal Protective Equipment (PPE) is adequate for the potential exposure.

f. The Company designated Environmental Specialist must be notified of NORM related waste management activities. The Environmental Specialists will advise on appropriate waste characterization methods, containerization and disposal /transportation options.

g. The Company CIH and/or representative will conduct all necessary NORM survey and testing instrument training as required.

NORM

Definitions:

a. ***Radiation*** includes alpha rays, beta rays, gamma rays, X-rays, neutrons, high-speed electrons, high-speed protons, and other atomic particles; but such term does not include sound or radio waves, or visible light, or infrared or ultraviolet light.

b. ***Radioactive material***- any material which emits, by spontaneous nuclear disintegration, corpuscular or electromagnetic emanations.

c. ***Restricted area***- any area controlled by the Company for purposes of protection of individuals from exposure to radiation or NORM.

d. ***Unrestricted area***- any area not controlled by the employer for purposes of protection of individuals from exposure to radiation or radioactive materials.

e. ***Dose***- the quantity of ionizing radiation absorbed, per unit of mass, by the body or by any portion of the body. When the provisions in this section specify a dose during a period of time, the dose is the total quantity of radiation absorbed, per unit of mass, by the body or by any portion of the body during such period of time.

f. ***Rem***- a measure of the dose of any ionizing radiation to body tissue in terms of its estimated biological effect relative to a dose of 1 roentgen (r) of X-rays (1 millirem (mrem)=0.001 rem). The relation of the rem to other dose units depends upon the biological effect under consideration and upon the conditions for irradiation.

g. ***Roentgen(R)*** - a special unit of exposure. A common exposure rate unit when dealing with NORM is micro-Roentgens per hour.

h. ***Background radiation***- the amount radiation an individual is exposed to from natural radiation sources such as radionuclides in solids, cosmic radiation from space, naturally occurring radionuclides deposited in the body from foods, etc.

i. ***Decontamination*** - the act of removing regulated NORM to reduced levels of radiation.

j. ***Naturally Occurring Radioactive Material (NORM)*** -any nuclide that is radioactive in its natural physical (not man made) but does not include by-products, source or special nuclear material.

k. ***Technically Enhanced Naturally Occurring Radioactive Material (TENORM)*** -altered radiological, physical, and chemical properties of a radioactive material, introducing a potential for; -redistribution and contamination of environmental media (soil, water, air, and biota), -increased environmental mobility in soils and surface and ground water, -incorporation of elevated levels of radioactivity or increased accessibility in products and construction material, or -improper disposal or use of disposal methods that may result in unnecessary or elevated exposures to individuals and populations via the accessible environment4

l. ***Radiation area***- any area, accessible to personnel, where radiation exists at levels that may subject the human body to a does in excess of five millirem per hour, or 100 millirem in five consecutive days.

m. ***Survey*** - evaluation of planned work areas,, uses, disposal, transfer, and/or presence of radiation sources under a specific set of conditions to determine actual or potential radiation hazards. Functional surveys include tests, physical evaluations/inspections, and radiation measuring to determine the concentration of radioactive materials present.

Occupational Dose Limits for Adults:

An annual limit, which is the more limiting of—

- The total effective dose equivalent being equal to 5 rems (0.05 Sv); or
- The sum of the deep-dose equivalent and the committed dose equivalent to any individual organ or tissue (other than the lens of the eye) being equal to 50 rems (0.5 Sv).
- The annual limits to the lens of the eye, to the skin of the whole body, and to the skin of the extremities, which are:
    - A lens dose equivalent of 15 rems (0.15 Sv), and
    - A shallow-dose equivalent of 50 rem (0.5 Sv) to the skin of the whole body or to the skin of any extremity.

Doses in excess of the annual limits, including doses received during accidents, emergencies, and planned special exposures, must be subtracted from the limits for planned special exposures that the individual may receive during the current year and during the individual's lifetime

Radiation Monitoring:

The following NORM monitoring equipment or equivalent is required. Equivalent testing instrumentation must be approved by the EHS Manager and designated CIH. a. A Ludlum Model 3 survey meter that reads radiation levels in both micro-Roentgens per hour (µR/hr) and counts per minute (CPM) b. A Ludlum Model 44-2 gamma scintillator probe-measures in (µR/hr) c. A Ludlum Model 44-9 alpha, beta, gamma probe (Pancake Probe)- measures in CPM d. A known source, attached to the meter, for daily instrument checks

NOTE: Survey equipment must be calibrated as per the manufacturer specifications.5

Applications:

a. The COMPANY Project Management Team and the EHS Department must conduct surveys as necessary to comply with the provisions of this section.

b. Project site surveys include a physical or administrative survey of project locations. Historical monitoring data provided by customer facilities, property owners, etc. resulting in suspected NORM contamination will require a Company exposure control plan.
c. Company Project Management must notify the EHS Department of NORM exposure concerns immediately upon suspicion or confirmation.
d. The EHS Department will coordinate with the Project Management team in developing NORM exposure control plans. Radiation levels/concentrations will be measured and professionally evaluated to determine appropriate protective measures and work strategies.

Personnel Protective Methods:

The Company utilizes three principles of protection as established by the US-EPA;

a. Implementing work periods/cycles that limit worker exposure to a known quantity of radiation.

b. Placing distance between the worker and the radiation source (i) The intensity and type of radiation will be closely evaluated in determining exposure distance thresholds. For example, gamma rays travel long distances, but alpha and beta rays have very short travel distance. (ii) As a rule, doubling the distance from the source reduces the exposure by a factor of four, and visa versa.

c. Shielding reduces exposure (i) Shielding is a material located/placed n between you and the source of the radiation. The amount of shielding required depends on the type and strength of the radiation.

The level of PPE required is based on the anticipated exposure to site specific NORM-material and background NORM levels, and must be determined before work starts.

At a minimum, the PPE ensemble should consist of the following when working in NORM contaminated areas:

Protective Clothing (Medium- High Exposure Concentrations)

(i) Approved full-face APR Respirator with HEPA (P-100 cartridge), or SAR.
(ii) (ii) Protective Clothing –6
o DuPont Tempro or Equivalent,
o impervious gloves,
o impervious boots,
o Hard hat o safety glasses (or googles/ face shields)

All garment seams must be taped to eliminate potential gaps.

The EHS Manager and CIH must agree on a PPE ensemble for the specific work/exposure environment before work begins.

Personnel Decontamination Procedures:

a. Personnel shall not begin doffing of PPE until radiation measurements are taken of the entire PPE ensemble to identify potential contamination “hot spots”.

b. Any potentially contaminated body parts must be thoroughly washed in the decontamination area before leaving the area.
c. PMs must consult with the Company Environmental Specialist for specific handling procedures of any waste generated during decontamination measures.
d. Decontamination plans must be developed prior to the commencement of any NORM related project, and integrated into the overall site health and safety plan.

Philosophy Mission Statement

Policy

To conduct business in a manner that allows each employee to work each day without incident or injury.

Purpose

To provide all operations with standardized safety programs and implementation guidelines so as to assure a uniform level of accident prevention, “best management practices”, and regulatory compliance, while recognizing local needs and individual operating cultures.

Scope

The contents of this manual shall form the compliance standard for safely conducting company business at office facilities, projects and operations under the direct control of the company.

Definitions

Office Facilities, Projects, Work Sites and Operations mean any location where employees of the company are assigned to perform work.

Direct Control of the Company means any work or activity performed by COMPANY employees or where COMPANY employees are directing the course of work.

Requirements

It is the policy and primary concern of the COMPANY to develop and maintain safe and healthy worksite conditions for COMPANY employees, COMPANY subcontractors, and the general public. This shall be accomplished through the application of the COMPANY Hazard Communication Program, COMPANY Vehicle Safety and Policy Manual, Medical Surveillance Program, Radiation Protection Program, Chemical Hygiene Plan, safety training courses and programs, and through procedures and policies as outlined in this manual. At this COMPANY, safety shall take precedence over more expedient unsafe operations.

The COMPANY will make every attempt to provide equipment and create conditions that will make for a safe workplace, and safety education shall be provided to employees as necessary.

The COMPANY requires compliance with this Health and Safety Policy Manual and established work procedures. Failure on the part of any employee to comply with this policy may result in disciplinary action and possibly termination of employment. In addition, subcontractors shall be expected to abide by the applicable provisions of the COMPANY safety policy.

This written program supersedes previous COMPANY health and safety programs and shall not be altered without approval of the Corporate Director of Health and Safety. It is intended that the Health and Safety Policy Manual be reviewed and updated annually, or as needed to address changing situations and services.

Policy Statement

Policy

Management, staff, and hourly employees of the Company must have a common objective to be successful. Our objective is the healthy, safe, environmentally sound, and productive operation of all Company activities. We have an obligation to preserve the human, physical, and financial resources of our company. In satisfying this obligation, worker safety and health will always be our #1 priority. As such, this basic policy must be considered in every phase of our business including acquisition, job planning, job setup, and performance.

Accordingly, our principal objectives are to:

- Provide a work environment that is free of unmitigated recognized hazards.
- Comply with all laws that regulate employee safety, health, and our environment.
- Recognize the priority of safety and health factors over purely economic considerations.
- Hold each employee accountable for the safe execution of all jobs assigned and full compliance with all environmental, safety, and health related procedures and training.
- Train our employees in safe and proper job procedures and required compliance with established procedures, policies and practices.
- Provide comprehensive New Employee Safety Training to all new hires.
- Hire only those persons who demonstrate the capacity to comprehend and execute all jobs in a safe and healthful manner consistent with the policies and procedures of the company and the training and job instruction provided.
- Promote worker health and safety both on and off the job.
- Maintain leadership in safety and accident/incident prevention by continuously improving safety performance and work methods and procedures.

First-line supervision has the greatest impact and thus the greatest opportunity to influence and promote safe work practices among our work force in the field. **The prevention of accidents/incidents requires everyone's concerted effort and daily attention. Everyone has equal authority and responsibility to take appropriate action to correct unsafe acts/or conditions.**

A properly planned and executed job will eliminate the chance for losses and return benefits that satisfy needs in each of these areas:

- Health, Safety, & Environment
- Morale
- Cost
- Production
- Quality
- Customer Satisfaction

Policy Statement

All employees will contribute to the company environmental, health, and safety program by following all policies and procedures, bringing unsafe conditions/acts to the attention of management, and recommending actions to improve the effectiveness of the program. Supervisors shall insist that employees observe and obey every rule and regulation necessary for the safe conduct of work, and shall take such action necessary to obtain compliance.

_Nicolaza R Harvey 6-14-2024 CEO

Signature, Date & title, i.e. CEO, President or Executive of the Company

PNT CONSULTING LLC
Personal Protective Equipment Program

Revision History

Revision 1 – March 2022

Purpose

The purpose of the Personal Protective Equipment (PPE) Program is to develop and implement the procedures for the identification, use, care and maintenance of PPE required to be used by employees for the prevention of illness and injury.

All employees are required to follow the minimum procedures outlined in this program. Any deviations from this program must be immediately brought to the attention of the Program Administrator.

Scope

- This policy applies to the use of PPE at PNT Consulting LLC and related facilities and operations. This program is integrated into our organization's written safety and health program and is a collaborative effort that includes all employees. The Program Administrator is responsible for the program's implementation, management, training and recordkeeping requirements.

Program Responsibilities

Management. The management of PNT Consulting LLC is committed to the safety and health of its workers. Management supports the efforts of the PPE Program Administrator by pledging financial and leadership support for the identification of hazards and implementation of appropriate PPE for those hazards. Management will regularly communicate with employees about this program.

Program Administrator. The Program Administrator reports directly to upper management and is responsible for the hazard assessments, implementation, training and administration of the PPE program. The Program Administrator will monitor the results of the program to determine additional areas of focus as needed. The Program Administrator will also:

- Conduct workplace hazard assessments to determine the presence of hazards that require the use of PPE (***Appendix A***)
- Select and purchase PPE
- Review, update and conduct PPE hazard assessments whenever:
  - A job or process changes
  - New equipment is used or added
  - There has been an accident
  - A supervisor or employee requests it
- Maintain records on hazard assessments
- Maintain records on PPE assignments and training
- Provide training, guidance, and assistance to supervisors and employees on the proper use, care and cleaning of approved PPE
- Periodically re-evaluate the suitability of previously-selected PPE
- Review, update and evaluate the overall effectiveness of PPE use, training, policies and program

PNT CONSULTING LLC
Personal Protective Equipment Program

Supervisors. Supervisors have the primary responsibility for implementing and enforcing PPE use in their work area, including, but not limited to:

- Providing appropriate PPE and making it available to employees
- Ensuring that employees are trained on the proper use, care, storage and cleaning of PPE
- Ensuring that PPE training certification and evaluation forms are signed and in the employee's file
- Ensuring that employees properly use and maintain their PPE
- Notifying the Program Administrator when new hazards are introduced or when processes are added or changed
- Ensuring that defective or damaged PPE is immediately disposed of and replaced

Employees. The PPE user is responsible for following the requirements of the PPE program, including, but not limited to:

- Properly wearing PPE as required
- Attending required training sessions
- Properly caring for, cleaning, storing, maintaining and inspecting PPE as required
- Following program policies and rules
- Informing the supervisor of the need to repair or replace PPE

Employees who repeatedly disregard and do not follow PPE procedures and rules will face disciplinary action up to and including termination.

General Requirements

Appropriate PPE is required to be worn <u>at all times</u> when employees are exposed to hazards that cannot be eliminated through the use of preferred elimination, substitution, engineering or administrative controls.

The workplace will be evaluated and all uncontrolled hazards will be identified at least two times a year based on changes to the workforce and workplace operations. Assessments will include, but are not limited to, the following items:

- Torso and abdominal protection
- Eye and face protection
- Head protection
- Foot protection
- Leg protection
- Hand protection
- Hearing protection (Separate written program)
- Respiratory protection (Separate written program)
- Fall protection (Separate written program)

*NOTE: PPE hazard assessment instructions are located in **Appendix A.** Hazard assessment forms are included in **Appendix B.***

PNT CONSULTING LLC
Personal Protective Equipment Program

PPE appropriate for the identified hazards will be identified, purchased and provided to all employees exposed to those hazards. All PPE will be properly fit to each employee before relying on it as a protective measure.

Employees will be continually trained, formally and informally, on the types of PPE necessary for the workplace hazards and its limitations. Training will also include the proper way to wear, use and maintain the PPE.

PPE Program Implementation

The following implementation steps will be used for this program:

- Conduct and document PPE assessment for each work task, assignment or location (see form in **Appendix B**)
- Select appropriate PPE based on hazard assessment
- Communicate PPE selection decisions to employees
- Provide PPE free of charge to all affected employees (obtain, purchase, rent, etc.)
- Train each affected employee
- Test employee understanding*
- Document training and employee testing results
- Retrain as necessary
- Enforce PPE requirements

*Essential functions for all tasks/assignments where PPE is required.

Employee Training

General Training
Before any employee is allowed to perform work in areas requiring PPE, they must first receive training in the proper use and care of the PPE they will be using. Periodic retraining will be offered to PPE users as identified by the lack of knowledge or the improper use of PPE, after changes in work tasks or at the supervisor's request. The training will include, at a minimum, the following subjects:

- PNT Consulting LLC requirement that PPE be worn at all times during identified tasks or in areas requiring PPE
- When it is necessary to wear PPE
- What PPE is necessary
- How to properly put on, take off, adjust and wear PPE

- The limitations of the PPE
- The proper care, maintenance, useful life and disposal of the PPE

Eye and Face Protection
Each affected employee will:

- Use appropriate eye and face protection equipment when exposed to hazards from flying objects or particles, molten metal, fumes, chemical liquids, gases, vapors, dusts, acids, caustics, and other potentially injurious chemical or physical hazards.
- Use appropriate eye protection equipment with filter lenses that have a shade number appropriate for the work being performed when exposed to an eye hazard from potentially injurious light radiation.
- When wearing prescription lenses while engaged in operations that involve eye hazards, wear eye protection that incorporates the prescription in its design, or wear eye protection that can be worn over the prescription lenses without disturbing the prescription lenses or the protective lenses.

Foot Protection
Each affected employee will wear protective footwear when working in areas where there is danger of objects falling on or rolling across the foot, piercing the sole, and where the feet are exposed to electrical or chemical hazards. Foot protection will comply with appropriate ANSI standards.

Hand and Body Protection
The Program Administrator will select and require employees to use appropriate hand protection when employees' hands are exposed to hazards from cuts, abrasions, punctures, chemical or thermal burns, harmful temperature extremes, vibration and skin absorption of harmful substances.

Head Protection
Each affected employee will wear appropriate protective head gear (hard hats, bump caps, etc.) when working in areas where there is a potential for injury to the head from falling objects, impact hazards, extreme temperatures or high UV levels.

Hearing Protection
The Program Administrator will select and require employees to wear appropriate hearing protection in environments where noise levels equal or exceed the OSHA Occupational Noise Exposure Standard (OSHA 29 CFR 1910.95) 8-hour time weighted average (TWA) of 85 dBA. See Hearing Protection Program for details.

Respiratory Protection
Each affected employee will wear respiratory protective equipment (respirators) when working in areas where respiratory hazards exist. All respirators will be in compliance with the OSHA 29 CFR 1910.134. See Respiratory Protection Program for details.

After training, employees will demonstrate that they understand how to use PPE properly. If they cannot demonstrate a sufficient understanding, they will be retrained.

Training of each employee will be documented using the Employee Training Record (**Appendix D**) and kept on file. The PPE Training Quiz (**Appendix E**) will be used to evaluate employees' understanding and will be kept

in the employee training records. The Record documents that the employee has received and understands the required training on the specific PPE he/she will be using.

Retraining

The need for retraining will be indicated when:

- An employee's work habits or knowledge indicate a lack of necessary understanding, motivation or skills required to properly use the PPE
- New equipment is installed that requires new or different PPE
- Changes in the workplace make previous training obsolete
- Changes in the types of PPE to be used make previous training obsolete
- Upon supervisor requests

Periodic Program Review

At least annually, the Program Administrator will conduct a program review to assess the progress and success of the program. The review will consider the following:

- Evaluation of all training programs and records
- The need for retraining of managers, supervisors and employees
- The jobs, processes or areas that have produced a high incidence rate of injuries or illnesses
- The Program's success will be determined and reported to senior management based upon comparison to previous years, using the following criteria:
    - Cost and frequency of workers' compensation cases
    - Employee and supervisor feedback through direct interviews and questionnaires

Annual reviews will be documented with the form shown in **Appendix C**.

Outside Contractors

Whenever outside personnel are contracted to work on-site, the Program Administrator or location management will communicate all necessary PPE safety requirements to the contractor before any work commences.

Record Retention

Written records will be kept which include trainee names, the type of training provided and the dates when training occurred. The Program Administrator will maintain these training records for 3 years.

The Program Administrator will maintain the Hazard Assessment Form for each work site evaluated for 5 years.

PNT CONSULTING LLC
Personal Protective Equipment Program

Appendix A – PPE Hazard Assessments

Survey

The Program Administrator will conduct a walk-through survey of the workplace at least two times a year. The survey is to identify sources of hazards to employees. The following hazard categories will be examined in each area and for each person and their tasks:

- Impact
- Penetration
- Compression
- Chemical/Gasses
- Heat/Cold
- Harmful dust
- Light (Optical) radiation
- Noise
- Falling objects
- Vibration
- Electrical shock

Hazard Sources

During the walk-through survey, the Program Administrator will observe:

- Sources of motion; i.e., machinery or processes where any movement of tools, machine elements or particles could exist, or movement of personnel that could result in collision with stationary objects
- Sources of high temperatures that could result in burns, eye injury, ignition of protective equipment, etc.
- Types of chemical exposures
- Sources of harmful dust
- Sources of light radiation, i.e., welding, brazing, cutting, furnaces, heat treating, high-intensity lights, etc.
- Sources of falling objects or potential for dropping objects
- Sources of sharp objects which might pierce the feet or cut the hands
- Sources of rolling or pinching objects which could crush the feet
- Layout of workplace and location of coworkers
- Any electrical hazards

Injury and accident data will also be reviewed to help identify problem areas.

Results

Following the walk-through survey, the data and information will be organized by work area and job description. An estimate of the potential for injuries will be made. Each of the basic hazards will be reviewed and a determination made as to type, level of risk, and severity of potential injury from each of the hazards identified. The possibility of exposure to multiple hazards simultaneously will be considered.

Strategies for elimination, substitution, engineering and administrative controls will be identified and implemented for all possible identified hazards. After applying all appropriate reduction and elimination technique, the remaining hazards will be analyzed and the proper PPE to reduce the hazards will be selected.

PNT CONSULTING LLC

Personal Protective Equipment Program

PPE will be identified for hazards that are in the process of being reduced or eliminated and/or when hazard-reduction efforts are not 100% effective in eliminating the hazards.

Appendix B – Hazard Assessment

Building: _____ **Date:** _____

Location: _____ **Prepared By:** _____

Job Task: _____

Does the job task present an occupational exposure to:

Eye Hazards	Yes	No	Hazard Description	Recommended PPE
Chemicals				
Dust				
Heat				
Cold				
Impact				
Light/Radiation				

Face Hazards	Yes	No	Hazard Description	Recommended PPE
Chemicals				
Impact				
Heat				
Cold				
Light/Radiation				

Head Hazards	Yes	No	Hazard Description	Recommended PPE
Chemicals				
Impact				
Heat				
Cold				
Light/Radiation				
Electrical Shock				

Hand Hazards	Yes	No	Hazard Description	Recommended PPE
Chemicals				

Impact/ Punctures				
Heat				
Cold				
Vibration				
Electrical Shock				
Cuts/Abrasions				
Foot Hazards	**Yes**	**No**	**Hazard Description**	**Recommended PPE**
Chemicals				
Impact/ Punctures				
Heat				
Cold				
Vibration				
Electrical Shock				
Compression				
Electrostatic Build-up				

Respiratory Hazards	**Yes**	**No**	**Hazard Description**	**Recommended PPE**
Fumes				
Mists				
Dusts				
Vapors				
Lack of Oxygen				
Particles				
Heat/Cold				

Noise Hazards	**Yes**	**No**	**Hazard Description**	**Recommended PPE**
Impact Noise >140 dBA				
Continuous Noise >85 dBA				

Appendix C – Annual Evaluation Report

Date of evaluation:	Evaluated by (list all present):
Written program reviewed: Yes No	
Detailed description of the procedures reviewed:	
Describe any procedure modifications:	
Have any new procedures been added?	
A review of the log of occupational injuries and illnesses (OSHA Form 300 or equivalent) and the associated accident reports and injury and illness reports was made: Yes No	
The following injuries resulted from failure to use the correct PPE:	

Personal Protective Equipment

Any actions needed or taken to ensure PPE use:
Comments:

Appendix D – Employee Training Record

The following individuals received training on **PNT Consulting LLC** Personal Protective Equipment Program.

Print Name	Sign Name	PPE

The undersigned conducted training in accordance with this Personal Protective Equipment Program.

Print Instructor's Name	

Personal Protective Equipment

Instructor's Signature	
Instructor's Title	
Date of Training	

Appendix E – Training Outline

Hazard Identification/PPE Selection

- Familiarize the employees with the potential hazards and the type of protective equipment that is available, and what it can do, i.e.; splash protection, impact protection, etc.
- Compare the hazards associated with the environment; i.e., impact velocities, projectile shape of masses, radiation intensities, with the capabilities of the available protective equipment.
- Identify the selected protective equipment which is at a level of protection greater than the minimum required to protect the employee from the hazards.
- Fit the user with the protective device and give instructions on care and use of the PPE.
- Ensure that employees are made aware of all warning labels and limitations of their PPE.

Fitting the Device

Each employee will be fitted with appropriate PPE. PPE that fits poorly may not afford the necessary protection. Protective devices are generally available in a variety of sizes. Care should be taken to ensure that the right size is selected. Continued wearing of the device is more likely if it fits the wearer comfortably.

Hazard Changes

It is the responsibility of supervisors and employees to inform the Program Administrator if they identify a change in the workplace hazard situation.

Guidelines

Training will cover the company requirement of PPE usage. Each type of PPE provided will be reviewed as to its purpose and function in the work environment. As required, the following types of PPE must be covered:

- Eye and face protection
- Head protection
- Foot protection
- Hand protection
- Hearing protection
- Respiratory protection

Cleaning and Maintenance

It is important that all PPE be kept clean and properly maintained. Cleaning is particularly important for eye and face protection where dirty or fogged lenses could impair vision. It is also

important to ensure that contaminated PPE which cannot be decontaminated is disposed of in a manner that protects employees from exposure to hazards.
1.0

Process Safety Management Awareness Program

Policy

The primary purpose of the PSM Standard is to prevent or minimize the unwanted release of hazardous chemicals, especially into locations that would expose personnel to serious hazards.

POLICY:

It is the company's intent to comply with all applicable regulations and to provide a workforce that is trained to safely perform their jobs with a full knowledge of the hazards and safe work practices associated with refining/chemical plant or other PSM regulated industry work. In accordance with the law, employees will receive initial and refresher training in the following:

- An overview of the refinery/chemical plant/facility process and operating procedures for the process that employees will be working with or near, including the hazards of the chemicals used in the process. This will include a complete review of the company HazCom Program and all SDSs that are provided for each unit where the employees will be working;
- Specific safety and health hazards;
- Procedures and safe work practices applicable to the employee's job tasks, including personal protective equipment, permits (confined space, hot work and general safe permits, job hazard analysis and auditing;
- Incident investigations are required for all incidents. When an incident occurs, an investigation will be immediately implemented, but not longer than 24 hours after the incident. Causal analysis and corrective actions will be documented and tracked for closure. Those records will be kept for a minimum of 5 years.
- The site-specific Emergency Action Plan.

Employees shall comply with established procedures and safe work practices, be on the alert for changing conditions and quickly report any accidental release or potential release of hazardous chemicals to a supervisor.

The company will promptly investigate every incident that results in, or could have resulted in, a dangerous release of a hazardous chemical.

All employees will attend the OWNER’s (refinery/chemical plant/facility) process overview and any site-specific training during the refinery/chemical plant/facility orientation, including the process overview and Emergency Action Plan. Attached is a summary of applicable information taken from the PSM standard.

Process Safety Management of Acutely Hazardous Materials

These regulations contain requirements for **preventing or minimizing the consequences of catastrophic releases** of toxic, reactive, flammable or explosive chemicals. These regulations are intended to eliminate to a substantial degree, the risks to which employees are exposed in petroleum refineries and chemical plants.

1. The employer (refinery/chemical plant/facility) shall develop and implement **written procedures** that provide clear instructions for safely conducting activities involved in each process.

A. Steps for Each Operating Phase:

1. Start-up
2. Normal operation
3. Temporary operations
4. Emergency operations, including emergency shutdowns
5. Normal shutdown
6. Start-up following a turnaround, or after an emergency shutdown

B. Operating Limits:

1. Consequences of deviation
2. Steps required to correct and/or avoid deviation
3. Safety systems and their functions

C. Safety and Health Considerations:

1. Properties and hazards of the chemicals used in the process
2. Precautions necessary to prevent exposure, including PPE
3. Control measures to be taken if physical contact or airborne exposure occurs
4. Safety procedures for opening process equipment (such as pipeline breaking)
5. Verification of raw materials and control of hazardous chemical inventory levels
6. Any special or unique hazards

Note: If Hot Work is to be performed, as with any hot work, a "Hot Work" permit shall be obtained from the client before any work commences (refer to the company hot work/welding policy if applicable).

2. A copy of the operating procedures shall be readily accessible to employees who work in or near the process area or to any other person who works in or near the process area.
3. The operating procedures shall be reviewed as often as necessary to assure that they reflect safe operating practices, including changes that result from changes in process chemicals, technology and equipment and changes to facilities.
4. The employer shall develop and implement **safe work practices** to provide for the control of hazards during operations such as opening process equipment or piping and control over entrance into a facility by maintenance, contractor, laboratory or other support personnel. These safe work practices shall apply to employees and contractor employees.

Training:

1. **Initial training**. Each employee presently involved in operating or maintaining a process, and each employee before working in a newly assigned process, shall be trained in an overview of the process and in the operating procedures. The training shall include emphasis on the specific safety and health hazards, procedures and safe practices applicable to the employee's job tasks.
2. **Refresher and supplemental training**. At least every three years, and more often if necessary, refresher and supplemental training shall be provided to each maintenance or operating employee and other workers necessary to ensure safe operation of the facility. The employer in consultation with employees involved in operation or maintenance of a process shall determine the appropriate frequency of refresher training.
3. **Training certification**. The employer shall ensure that each employee involved in the operation or maintenance of a process has received and successfully completed training. The employer, after the initial or refresher training shall prepare a certification record which contains the identity of the employee, the date of training, and the signatures of the persons administering the training.
4. **Testing procedures** shall be established by each employer to ensure competency in job skill levels and safe and healthy work practices.

Contractors:

1. The employer shall inform contractors performing work on, or near, a process of the known potential fire, explosion or toxic release hazards related to the contractor's work and the process, and require that contractors have trained their employees to a level adequate to safely perform their jobs. The employer shall also inform contractors of any applicable safety rules of the facility, and assure that the contractors have so informed their employees.
2. The employer shall explain to contractors the provisions of the emergency action plan.
3. Contractors shall assure that each of their employees have received training to safely perform their job and that the contract employees shall comply with all applicable work practices and safety rules of the facility.

Trade Secrets:

Company employees will respect and maintain the confidentiality of all “Trade Secret” information received and/or gathered from our clients (Owner Facilities). Any and all proprietary information obtained including but not limited to the following is governed by this policy:

- Development of the process hazard analysis
- Development of operating procedures

- Involvement in incident investigations
- Involvement in emergency response or emergency planning
- Involvement in compliance auditing

Management of Change (MOC)

The OWNER (refinery/chemical plant/facility) that is covered by the standard will typically handle all MOC situations, but we need to be aware of the program and be mindful that if we get involved with any changes, the necessary steps will need to take place. The company will establish and implement written procedures to manage changes (except for "replacements in kind") to process chemicals, technology, equipment, and procedures; and, changes to facilities that affect a covered process.

Prior to the change, address the following considerations:

- The technical basis for the proposed change;
- Impact of change on safety and health;
- Modifications to operating procedures;
- Necessary time period for the change; and,
- Authorization requirements for the proposed change.

The Company will train affected employees and contract employees in the change prior to start-up of the process or affected part of the process.

Process Safety Management Awareness Compliance

Policy

PNT Consulting LLC has processes within our operations which involve highly hazardous chemicals. In order to protect our employees and the environment **PNT Consulting LLC** has developed this Process Safety Management Compliance Program.

In recent years, a number of catastrophic accidents in the chemical industry have drawn attention to the safety of processes involving highly hazardous chemicals. OSHA determined that employees have been and continue to be exposed in their workplaces to the hazards of releases of highly hazardous chemicals which may be toxic, reactive, flammable, or explosive.

The requirements of the PSM standard are intended to eliminate or mitigate the consequences of such releases. The standard emphasizes the application of management controls when addressing the risks associated with handling or working near hazardous chemicals.

Administration

PNT Consulting LLC, Safety Manager is responsible for ensuring that this program is fully implemented and updated to ensure its effectiveness. The company's Process Safety Management Program is located in the Safety Manager's office.

Introduction

This Program has been developed for the (PROCESS THAT THIS PSM PROGRAM COVERS) at **PNT Consulting LLC** to meet the requirements of OSHA Standard 29 CFR 1910.119 Process Safety Management of Highly Hazardous Substances (PSM). Additional program requirements have been taken from applicable ANSI & (LIST SOURCES OF STANDARDS USED IN YOUR INDUSTRY SUCH AS IIAR) Standards.

References

- 29 CFR 1910.119, Process Safety Management of Highly Hazardous Chemicals; Final Rule; February 24, 1992, Federal Register Vol. 57, No. 36, pp. 6356-6417.
- OSHA Instruction CPL 2.45B, June 15, 1989, the Field Operations Manual (FOM).
- OSHA Instruction STP 2.22A, CH-2, January 29, 1990, State Plan Policies and Procedures Manual.
- OSHA Instruction CPL 2.94, July 22, 1991, OSHA Response to Significant Events of Potentially Catastrophic Consequence.

– OSHA Instruction ADM 1-1.12B, December 29, 1989, Integrated Management Information System (IMIS) Forms Manual.

Responsibilities

Company Management

Management assigns sufficient resources and qualified operators to ensure safe operating and material conditions are maintained.

Management will assign a qualified supervisor to oversee and direct (PROCESS COVERED IN THIS PROGRAM) operations, maintenance and training involve (PROCESS COVERED IN THIS PROGRAM) operators in the various elements of this program request, as necessary, assistance from Company Engineering to execute the PSM Program and conduct effective audits.

(PROCESS COVERED IN THIS PROGRAM) Manager

The Process Manager will train all (PROCESS COVERED IN THIS PROGRAM) operators in hazards of the (PROCESS COVERED IN THIS PROGRAM) process, safe operating procedures, and good engineering practices assign tasks based on operators level of knowledge monitor maintenance and operations activities to ensure they comply with good engineering practice ensure contractors are provided the information required by this program document the information, activities, inspections, etc required by this program.

(PROCESS COVERED IN THIS PROGRAM) Operators

Process Operators actively participate in the PSM program exercise good engineering practices in the operation and maintenance of the (PROCESS COVERED IN THIS PROGRAM) systems comply with all safety procedures.

Human Resource Manager

The Human Resource Department provides PSM overview indoctrination training for all new employees as part of the New Hire Safety Orientation training.

PSM Elements

The PSM Standard contains 14 Elements that must be addressed in this program.

- Employee Participation
- Process Safety Information (PSI)
- Process Hazard Analysis (PHA)
- Operating Procedures
- Training
- Contractor Safety
- Pre-Startup Safety Review
- Mechanical Integrity
- Hot Work Program
- Management of Change (MOC)
- Incident Investigation
- Emergency Planning and Response
- Compliance Audits
- Trade Secrets

Employee Participation

PNT Consulting LLC has developed a Plan of Action for implementation of Employee Involvement. The Company has consulted with employees on the conduct of the development of PSM Elements. The Company provides Employee access to PSM information.

Process Safety Information (PSI)

PNT Consulting LLC has compiled technical information on the process and equipment in the (PROCESS COVERED IN THIS PROGRAM) system. This requirement is to allow for PHA and maintaining information on the system for Operator training and reference.

Specifically:

- Hazards of (CHEMICAL COVERED IN THIS PROGRAM) pertaining to the technology of the (PROCESS COVERED IN THIS PROGRAM) system.

- Information pertaining to the equipment in the process.
- Documentation that equipment complies with recognized and generally accepted good engineering practices.

Process Hazard Analysis

At **PNT Consulting LLC** an initial process hazard analysis has been conducted by a team with expertise in engineering and process operations, including at least one employee who has experience and knowledge on the (PROCESS COVERED IN THIS PROGRAM) system.

Completion date for PHA was (Type In Date).

After Initial PHA

The Company has established a system to

- Promptly address the team's findings and recommendations.
- Assure that the recommendations are resolved in a timely manner.
- Document resolutions.
- Document what actions are to be taken.
- Complete actions as soon as possible.
- Develop a written schedule of when these actions are to be completed.
- Communicate the actions to operating, maintenance.

PHA review is required at least every five (5) years to updated and revalidate by a qualified person to assure that the process hazard analysis is consistent with the current process.

PHA must address:

- The hazards of the process;
- Identify previous incident which had a likely potential for catastrophic consequences in the workplace;
- Engineering and administrative controls;
- Detection methods for providing early warning of releases;

- Consequences of failure of engineering and administrative controls;
- Human factors ; and
- Qualitative evaluation of a range of the possible safety and health effects of failure of controls on employees.

Operating Procedures

PNT Consulting LLC has developed and implemented written operating procedures that provide clear instructions for safely conducting operations and maintenance. Operating procedures will be readily accessible to employees. The operating procedures will be reviewed as often as necessary to assure that they reflect current operating practice. The Company will certify annually that these operating procedures are current and accurate. The Company will develop and implement safe work practices to provide for the control of hazards during operations such as lockout/tagout; confined space entry; opening process equipment or piping; and control over entrance into a facility by maintenance, contractor, laboratory, or other support personnel. These safe work practices will apply to employees and contractor employees.

Procedures will include:

1. Initial startup.
2. Normal, temporary and emergency operations.
3. Normal shutdown.
4. Startup following a turnaround or after an emergency shutdown.
5. Operating limits.
6. Consequences of deviation & Steps required to correct or avoid deviation.
7. Safety and health considerations.
8. Precautions necessary to prevent exposure, including engineering controls.
9. Administrative controls, and personal protective equipment.
10. Control measures to be taken if physical contact or airborne exposure occurs.
11. Quality control for raw materials and control of hazardous chemical inventory levels.
12. Safety systems and their functions.

Training

Initial Training

Each operator will be trained in an overview of the process and in the operating procedures. The training will include emphasis on the specific safety and health hazards, emergency operations including shutdown, and safe work practices applicable to the employee's job tasks.

Refresher Training

Refresher training will be provided at least every three years, and more often if necessary, to each employee involved in operating a process to assure that the employee understands and adheres to the current operating procedures of the process. The Company, in consultation with the employees involved in operating the process, will determine the appropriate frequency of refresher training.

Training Documentation

The Company will ascertain that each employee involved in operating a process has received and understood the training required by this paragraph. The Company will prepare a record that contains the identity of the employee, the date of training, and the means used to verify that the employee understood the training.

Contractors

In regard to contractors, **PNT Consulting LLC** will do the following:

- Obtain and evaluate information regarding the contract Company's safety performance and programs.
- Inform all contractors of the known potential fire, explosion, or toxic release hazards related to the contractor's work and the process.
- Inform all contractors of the applicable provisions of the emergency action plan.
- Develop and implement safe work practices to control the entrance, presence and exit of contract personnel.
- Evaluate the performance of contract Companies in fulfilling their obligations.
- Maintain a contract employee injury and illness log related to the contractor's work in process areas.

Pre-Startup Safety Review

The Company will perform a pre-startup safety review for new facilities and for modified facilities when the modification is significant enough to require a change in the process safety information. The purpose of the Pre-Startup Review is to confirm that, prior to the introduction of highly hazardous chemicals to a process:

- Construction and equipment is in accordance with design specifications;
- Safety, operating, maintenance, and emergency procedures are in place and are adequate;
- Modified facilities meet the requirements contained in Management of Change; and
- Training of each employee involved in operating a process has been completed.

Mechanical Integrity

PNT Consulting LLC will establish and implement written procedures to maintain the on-going integrity of (PROCESS COVERED IN THIS PROGRAM) equipment. This includes:

- Test & Inspections (T&Is) on equipment following recognized and generally accepted good engineering practices, manufacturers recommendations and operating experience for the conduct and frequency;
- Documentation of T&Is, identifying:
    - Date
    - name of the person performing T&I
    - serial number or other identifier of the description of the inspection or test performed
    - results

Equipment Deficiencies

Correct deficiencies in equipment that are outside acceptable limits before further use or in a safe and timely manner when necessary means are taken to assure safe operation.

New Equipment

Assure that equipment as it is fabricated is suitable for the process application for which they will be used. Additionally, conduct appropriate checks and inspections to assure that equipment is installed properly and consistent with design specifications and the manufacturer's instructions.

Material Control

Assure that maintenance materials, spare parts and equipment are suitable for the process application for which they will be used.

Hot Work

The Company will issue a hot work permit for hot work operations conducted on or near a covered process. The permit will document that the fire prevention and protection requirements in 29 CFR 1910.252(a) have been implemented prior to beginning the hot work operations; it will indicate the date(s) authorized for hot work; and identify the object on which hot work is to be performed. The permit will be kept on file until completion of the hot work operations.

Management of Change (MOC)

PNT Consulting LLC will establish and implement written procedures to manage changes (except for "replacements in kind") to process chemicals, technology, equipment, and procedures; and, changes to facilities that affect a covered process.

Prior to the change, address the following considerations:

- The technical basis for the proposed change;
- Impact of change on safety and health;
- Modifications to operating procedures;
- Necessary time period for the change; and,
- Authorization requirements for the proposed change.

The Company will train affected employees and contract employees in the change prior to start-up of the process or affected part of the process.

The Company will up-date PSI, PHA and Operating Procedures.

Incident Investigation

PNT Consulting LLC will investigate each incident that resulted in, or could reasonably have resulted in a catastrophic release of highly hazardous chemical in the workplace. An incident investigation will be initiated as promptly as possible, but not later than 48 hours following the incident.

Establish an incident investigation team which consists of at least one person knowledgeable in the process involved, including a contract employee if the incident involved work of the contractor, and other persons with appropriate knowledge and experience to thoroughly investigate and analyze the incident

An incident report will be prepared at the conclusion of the investigation that includes at a minimum:

- Date of incident
- Date investigation began
- Description of the incident
- Factors that contributed to the incident
- Recommendations resulting from the investigation

Corrective Actions

The company will establish a system to promptly address and resolve the incident report findings and recommendations. Resolutions and corrective actions will be documented

Report Review

The report will be reviewed with all affected personnel whose job tasks are relevant to the incident findings including contract employees where applicable. Incident investigation reports will be retained for five years

Emergency Planning & Response

PNT Consulting LLC will establish and implement an emergency action plan for the entire plant in accordance with the provisions of 29 CFR 1910.38(a). and 29 CFR 1910.120(a), (p) and (q). In addition, the emergency action plan will include procedures for handling small releases.

Compliance Audits

The Company will certify compliance with the provisions of the PSM Standard at least every three years to verify that the procedures and practices developed under the standard are adequate and are being followed.
The compliance audit will be conducted by at least one person knowledgeable in the process.
A report of the findings of the audit will be developed.
The Company will promptly determine and document an appropriate response to each of the findings of the compliance audit, and document that deficiencies have been corrected.
The Company will retain the two (2) most recent compliance audit reports.

Trade Secrets

PNT Consulting LLC will make all information necessary to comply with the section available to those persons responsible for compiling the process safety information, those assisting in the development of the process hazard analysis, those responsible for developing the operating procedures, and those involved in incident investigations, emergency planning and response and compliance audits without regard to possible trade secret status of such information.

There is no restriction in the OSHA Standard 1910.119 which prevents the company from requiring any persons to whom the information is made available to enter into confidentiality agreements not to disclose the information.

Rules and procedures set forth in OSHA Standard 1910.1200, employees and their designated representatives will have access to trade secret information contained within the process hazard analysis and other documents required to be developed by this standard.

Employee Participation Plan of Action

General

There are between ____ to ____ employees at PNT Consulting LLC, involved in the (PROCESS COVERED IN THIS PROGRAM). Since there is a relatively small number of personnel in the process, they will be involved on almost a daily basis in the various elements of the PSM program.

Documentation

A combination of historical narrative, one-line entry log, training summary sheets, and other documents for the various elements will be used to document employee participation. The following Employee Participation Plan of Action will be followed for PSM activities:

Plan of Action

Operator & Technicians will be:

- Included in collection and review of Process Safety Information (PSI)
- Included in the Process Hazard Analysis (PHA)
- Included and utilized in the development of operating procedures
- Trained in all aspects of operation of the refrigeration systems to ensure they are able to safely conduct assigned tasks

- Trained to monitor Contractor Employees for compliance with good engineering practices and safety procedures
- Included in all Pre-Startup Safety Reviews
- Used for conducting Mechanical Integrity Inspections
- Trained in the Company Hot Work Program
- Included in the Management of Change (MOC) process
- Included in al Incident Investigations
- Trained in the Plant Emergency Response Plan
- Utilized and interviewed for compliance audits
- Provided access to all PSM information
- All Employees will be provided PSM Overview Training

Process Hazard Analysis

General

PNT Consulting LLC established a PHA team to identify equipment, operating procedures, and conditions where the potential exists for employee exposure and environmental hazards associated with (NAME OF PROCESS).

Employee exposure hazards would typically involve liquid (NAME OF PROCESS) spills and/or accidental releases of (NAME OF PROCESS CHEMICAL).

Environmental hazards occur when vapor releases or liquid spills reach beyond the property line, into the atmosphere, or into the ground.

PHA Team

The team consists of Operator/Technicians, (LIST ALL TEAM MEMBERS). (TEAM LEADER NAME) is experienced in (NAME OF PROCESS) and has received training in Process Hazard Analysis.

PHA Method

The What-If methodology has been selected as the process for PHA at this Company. The team develops What-If questions using sub-systems from the PI&Ds, and identified consequences, identified safeguards, identified recommendations, and ranked severity and likelihood.

Recommendations are made based upon the What-If questions and are submitted to Engineering for review.

PHAs are conducted for initial program development, when there are changes to PSI, and are revalidated at least every 5 years.

PHA Resolution System

When PHAs are completed/reviewed by the team, the recommendations will be sent to Company Engineering for comment. After Engineering review is completed, the PHA Team Leader will develop a plan of action for:

- Documenting reasons recommendations were not utilized
- Implementing necessary recommendations
- Documenting system changes in PSI
- Documenting PHA Recommendation completed items

Basic Resolution Time Frame Guidelines:

- Submit PHAs to Engineering within 1 week of completion
- Document Engineering review when returned
- Develop PHA resolution POA within 2 weeks after Engineering Review

Process Safety Information (PSI)

General

Process Safety Information is the technical information on the process and equipment in the (NAME OF PROCESS) system. This information allows for accurate Process Hazard Analysis and maintaining information on the system for operator training and reference.

Records

PSI Records are contained in this section, equipment manuals, Operating Procedures section, Mechanical Integrity section, and in the PNT Consulting LLC Office files.

Record maintenance and update is the responsibility of the (NAME OF PROCESS) Manager.

Record Content

Specific Technical Information includes:

- Hazards of (NAME OF PROCESS)
- Block Flow Diagram
- Piping and Instrument Diagrams
- Process Chemistry
- Maximum Intended Inventory
- Technology of Process Changes
- Materials of Construction
- Electrical Classification
- Pressure Relief System
- Ventilation System Design
- Material and Energy Balances for Processes Built After May 26, 1992.
- Safety Systems
- Equipment List and Specifications
- Design Codes and Standards Employed and Documentation that equipment complies with recognized and generally accepted good engineering practices.
- For existing equipment designed and constructed in accordance with codes, standards, or practices that are no longer in general use, the Company will determine and document that the equipment is designed, maintained, inspected, tested, and operating in a safe manner.
- Site Plan which includes: The (NAME OF PROCESS) facility, warehouses and buildings, roads and parking areas, access ways and walkways, fences, gates, and property lines.

Operating Procedures

General

Written Operating Procedures have been developed for (NAME OF PROCESS) system. The Operating Procedures are located in binders and in the manufacturer's equipment manuals. Operating Procedures are available to the operating employees, maintenance employees, contractor employees, and representatives.

Operating Procedure Format

Most Operating Procedures will follow the following format:

- Description/Purpose of the equipment
- Name of the procedure
- Listing of equipment involved in the procedure
- Desired operating ranges for temperature, pressure, etc.
- Consequences of deviation from desired temperature, etc.
- Steps required to correct and/or avoid deviation
- Safety systems
- Safety and health considerations
- Operator requirements
- Step by step procedures
- Comments, table of contents, and/or revisions section, with original date
- Developed and revision dates and distribution instructions.

Operating Procedure Content

The following procedures will be addressed, as applicable, in each Operating:

- Procedure
- Initial startup
- Normal operations
- Temporary operations
- Emergency operations

- Power failure
- Emergency shutdown
- Normal shutdown
- Startup following a turnaround or emergency shutdown
- Alarm testing and response
- Charging (NAME OF PROCESS) to the receiver or storage vessel
- Transferring (NAME OF PROCESS) from a storage vessel to a receiver or seal vessel
- Valving in/Valving out (NAME OF PROCESS) equipment in the system
- Tying multiple systems together (where applicable)
- Removal or disposal of (NAME OF PROCESS)
- Draining compressor oil from (NAME OF PROCESS) vessels
- Changes in operating limits and alarms during modes other than normal operation

Equipment Procedures

Operating Procedures are to be maintained for the following equipment:

- Compressors
- Reactors
- Condensers
- Pressure Vessels
- Purgers
- Pumps
- Chillers
- Mixers
- Filter systems

- Alarm systems
- Distribution stations

Training

General

Training is an essential part of the PSM Program. It provides a means of conveying information and ensuring comprehension of information.

There are 3 categories of persons who must have training as required by the OSHA PSM Standard:

1. Operators/Technicians
2. Other employees
3. Contractor Employees (this training is discussed in the Contractor Safety Element)

(NAME OF PROCESS) Operator/Technician Training

The (Safety Manager) is responsible for conducting and ensuring effective training of Operators and Technicians. There are 4 types' phases of Operator Training:

1. Initial training covering the elements of the PSM Program and an overview of the process and operating procedures. The training will include emphasis on the specific safety and health hazards, normal and emergency operations including shutdown, and safe work practices applicable to the employee's job tasks. Initial training will also include understanding various parameters, identification of abnormal conditions and the procedures for restoring the system to normal. This training is required before any unsupervised tasks are assigned. Additional Emergency Response Team Training and training in other Safety Programs will be conducted in the same manner as for other employees. Materials such as IIAR, Videos and computer review and examinations will be used to ensure the quality and correctness of the training. Other training material will include documents such as PHA, PSI Operating Procedures specific to the equipment at this location.
2. On-the-Job Training on the system and the hazards associated will be a continuous process for each Operator. This continuing training will be accomplished by:
    a. Assigning newer employees to assist more experienced Operators in complex tasks and evolutions.
    b. Having Operators review the latest technical material such as IIAR Bulletins

c. Operator participation in Safety Meetings

3. Refresher Training will be conducted periodically by knowledgeable individuals covering all aspects of the initial training. Refresher Training will be conducted at least every 3 years.

4. Training on changes in the process or systems will occur when the Management of Change procedures dictates the need.

Other Employees

Employees who do not work with the (NAME OF PROCESS) system are provided a brief and written information on the PSM program as part of the New Employee Indoctrination Program conducted by the Human Resources Department.

Documentation

(NAME OF PROCESS) Operators: A training file is maintained on each Operator and Technician. This file documents all training and involvement in the PSM / (NAME OF PROCESS) and Safety Programs. The (POSITION TITLE) maintains these training files.
Other Employees: Training records, required by the PSM Program, for other Employees are maintained by the Human Resources Manager.

Pre-Startup Safety Review

General

The purpose of the Pre-Startup Safety Review is to:

1. Verify that all construction is in accordance with specifications
2. Ensure that appropriate tests and inspections have been performed
3. Ensure safety, operating, and maintenance procedures are adequate
4. PHA has been conducted
5. PHA recommendations have been addressed prior to start up
6. Operating Procedures are current, reflecting system modifications
7. Training of operating personnel in changes has been completed

Conduct of Review

Pre-Startup Safety Reviews will be conducted by the (Safety Manager) or designated alternate prior to introducing (NAME OF PROCESS CHEMICAL) into the system when:

1. New additions are made to the system.
2. Modifications are made that change Process Safety Information.

Contractors

General

Contractors under the Process Safety Management program are those who are involved in the installation or maintenance of (PROCESS COVERED IN THIS PROGRAM) equipment and systems at this Company. All contractors, covered in this PSM Program will be provided necessary information concerning the (PROCESS COVERED IN THIS PROGRAM) process, equipment and procedures.

Specific Requirements

Pre-Work Review: Prior to allowing a contracting company to commence work in the (PROCESS COVERED IN THIS PROGRAM) process the following requirements must be met:

- Obtain and evaluate information regarding the contract Company's safety performance and programs (written documentation required
- Inform contract Company’s of the known potential fire, explosion, or toxic release hazards related to the contractor's work and the process
- Explain to contract Company’s the applicable provisions of the emergency action plan.
- Provide contractors with copies of local safety programs, safety and emergency procedures and a copy of this PSM program.
- Complete all the requirements of the Company Contractors Liability Agreement.
- Inform the contractor that a periodic performance evaluation will be conducted to ensure the contractor and contract employees are fulfilling their obligations
- Inform the Contractor that a contract employee injury and illness log related to the contractor's work in process areas must be maintained on site for the duration of the contract work.

- The contractor Company must provide information relating to any unique hazards presented by the contractor employees work or any hazards found by the contractor employees.
- Prior to the start of any work the Contractor must provide the following documentation:
- Their safety program information and other documentation required by the Company contractors Liability and Safety Agreement.
- Certification that they have informed their employees of potential fire, explosion, or toxic release hazards may exist at or near their work area at this Company and that they have explained the Company Emergency Action Plan to their employees.
- Training documentation concerning training provided to their employees to insure they understand the safe work necessary to safely perform tasks.
- Certification that they have explained the Company Hot Works Permit Program and other permits Company uses that will be needed during their time on Company property.
- Agreement to advise Company of any unique hazards presented by their work any found during their work.
- Certification that materials, parts and equipment to be installed in the (PROCESS COVERED IN THIS PROGRAM) system meet industry and engineering standards for the application used.
- The (PROCESS COVERED IN THIS PROGRAM) Superintendent is responsible for issuing information and documents to the contractor and collection and review of contractor information and certifications

Access Control

PNT Consulting LLC maintains security around the Company and process area to insure that no unauthorized contractors or contractor employees have entrance or presence in or to the process area, and that a safe exit is provided and maintained.

Access to the Company is through _____ and _____ controlled by _____.

Hot Work

General

Hot work is classified as any welding, brazing, grinding, flame or spark producing operation. The requirements for hot work on (NAME OF PROCESS) equipment are the same as those for all other hot work at this Company. These requirements are listed in the (**XXXXXX**) Safety Manual.

Qualifications

Only certified welders employed by contractors approved by (**XXXXXX**) are permitted to do any welding on refrigeration equipment. Company Maintenance personnel may conduct hot work operation on equipment that does not require a qualified welder.

Hot Work Restrictions

Welding on or near refrigeration equipment is considered an unusual event. The following additional restrictions apply:

- Welding is not allowed on any (NAME OF PROCESS) component that contains oil, flammable vapor/liquid or (NAME OF CHEMICAL).

- Prior to conducting hot work on (NAME OF PROCESS) equipment, that section of the system will be de-pressurized and, if possible, voided.

- All system equipment and piping within the hot work boundary must be voided, cleaned or purged with inert gas to prevent fire, explosion or other hazardous conditions from developing.

- All oil will be removed from equipment interiors and the internal areas cleaned of residue prior to commencing hot work.

- A qualified Operator or Technician will be continually present during all hot work operations on the (NAME OF PROCESS) system.

Mechanical Integrity

General

The purpose of the Mechanical Integrity Program is to provide written procedures for inspections and testing in order to properly maintain the equipment involved in the (NAME OF PROCESS). Aspects of the program are:

- Operator Training
- Identification and scheduling of tests and inspections
- Documentation of tests and inspections
- Development of maintenance procedures
- Scheduling of periodic maintenance procedures
- Correction of deficiencies to equipment that are outside acceptable limits
- Quality control of parts and materials
- Periodic monitoring and logging of system parameters by qualified Operators

Operator Training

All Operators are trained to:

- Understand system parameters and actions for out of specification readings
- Properly conduct and document tests and inspections
- Use and understand proper maintenance procedures
- Identify and use correct material and parts for maintenance
- Properly tour the (NAME OF PROCESS) system, including log taking requirements

Tests and Inspections

A schedule of periodic tests and inspection has been developed to ensure pressure boundaries, safety systems and controls function to design standards. For all equipment the schedule will identify:

- Equipment name and/or specific identifier
- Required periodic maintenance, inspections & tests
- Periodicity of periodic maintenance, inspections and tests
- Procedure for conducting maintenance, tests and inspections

Maintenance Procedures

Written Maintenance Procedures have been developed for all expected routine maintenance, tests and inspections. These procedures include:

- Equipment Identification
- Required tools and equipment
- Safety Hazards and Cautions
- Documentation required
- Step- by-step procedure
- Required inspections or tests

Correction of Deficiencies

Prompt correction of deficiencies is an important part of the Mechanical Integrity Program. When any equipment is found to have a parameter out of normal or expected range for the current operating condition, corrective action will be taken to adjust the equipment/system to restore normal conditions or the specific equipment will be placed in a safe condition. Generally, a safe condition is off line and shutdown.

Deficiency Identification

Deficiencies found during normal operations will be logged on the tour sheet with a remark as to the time identified, specific parameter, action taken to restore parameter to normal, and the time the parameter returned to normal range.

Deficiencies found during inspections and tests will be recorded on the Test and Inspection Sheet. All discrepancies found will be corrected prior to bringing the specific equipment back on line after the test or inspection.

Discrepancies found in piping or other pressure boundaries will be evaluated to ensure safe operation may continue. These deficiencies will be recorded and scheduled for further evaluation or repair.

Quality Control

To maintain proper mechanical integrity of the ammonia (NAME OF PROCESS) system, it is important that materials, parts and equipment meet the required design specifications for the application. Quality Control procedures provide the process for ensuring correct material and parts are used.

Parts & Material Identification

Prior to using any material, part or equipment in the (NAME OF PROCESS) system to following actions, as applicable, are required:

- Check part number and material against manufacturers parts list and specifications
- Conduct a visual inspection of the material to ensure there are no defects in manufacturing or damage caused by improper shipping of storage
- Compare old to new part to ensure same material, configuration and size
- Compare name-plate data to system application requirements
- Old gaskets will not be re-used unless designed for re-use. When a sealing surface has been disassembled, the old gasket is to be thrown away.

Parts Storage

Proper storage and receipt inspection will prevent damage to spare parts. The parts storage and receipt guidelines are:

- All material, parts and equipment will be stored so as to prevent damage.
- When received, new material, parts and equipment will be properly labeled for identification
- Used and new material, parts or equipment will not be stored in the same bin or shelf.

Periodic Monitoring and Logging

Monitoring of system parameters is essential for evaluating proper mechanical operation of equipment in the (NAME OF PROCESS) process. A log sheet has been developed to record system parameters. This is in addition to the computer log generated by the automated control system.

Logging and Tours

Every 4 hours a qualified (NAME OF PROCESS) Operator will record specified readings on gages, thermometers and other direct reading instrumentation. Additionally, the Operator will complete a thorough inspection tour of the system every 4 hours and annotate the Inspection Tour Checklist. One checklist will be filled out for each tour.

Out of Normal Readings

The log sheets have the normal range for each parameter logged. When out of normal readings are observed, the operator will take the necessary action to restore normal conditions. The operator will also record the actions

taken on the comment section of the log sheet. If the Operator is unable to restore normal conditions, the Operator will immediately notify the Lead (NAME OF PROCESS) Operator on shift.

Log Review

Each day the (NAME OF PROCESS) Supervisor will review the logs from the previous day to look for trends and ensure corrective action was taken for out of normal readings. A spot check of written log readings will be made against the computer generated data to ensure both the direct reading instrumentation and computer monitoring system agree within accepted tolerance.

Retention of Logs

All written log and tour sheets will be retained permanently. The previous 90 days logs will be kept in the (NAME OF PROCESS) Office. All other logs and tour sheets may be stored off site.

Emergency Planning & Response

General

Emergency plans have been established for this Company to coordinate actions in the event of a chemical release or other emergency event. The Emergency Action Plan is published under a separate binder.

The plan uses the Incident Command Structure for organization of response teams, actions and coordination with outside local emergency response agencies.

Management of Change

General

The Management of Change Program is an aid to ensure:

- Proper material and equipment is placed in the system
- Management and Engineering review of proposed changes
- PHA is conducted prior to changes
- PSI is updated
- Operator Training is accomplished for the changes

Process Safety Management Awareness Compliance

Scope

This Management of Change procedure is applies to:

1. All modifications to equipment in the (NAME OF PROCESS) system;
2. All changes in procedures;
3. All changes to control, indication or alarm systems;
4. Changes to facilities that affect the (NAME OF PROCESS) process;

Management of Change does not apply to:

1. Changes in-kind;
2. Minor clarification revisions to operating, test or maintenance procedures;

Management of Change Procedure

When a need for change is identified, the (NAME OF PROCESS) Supervisor will initiate the Management of Change procedure. Approval from Company Engineering is required prior to implementing any changes in the (NAME OF PROCESS) System design, parts or equipment.

Procedure

1. Initiate MOC form, providing all required information
2. Conduct and document PHA for proposed change
3. Submit MOC form and documents to local management for review
4. Forward to Company Engineering for Approval
5. Obtain approval for change from Company Engineering
6. Obtain certification documents on all parts and equipment to be added to the system
7. Document all contractor requirements met
8. Conduct Change
9. Update and document PSI changes
10. Conduct and document Operator Training

11. Conduct and document Pre-Startup Review

Definitions

Change: Any modification which affects the capability of a process to maintain control of the physical and chemical transformations taking place; including all modifications to equipment, procedures, raw materials and processing conditions other than "replacement in kind".

Change in Equipment: Temporary or permanent modifications made to operating equipment. Examples:

- Substitution of a material of construction with a different material.
- Replacement of a vessel with one of a different pressure rating.
- Piping changes.
- Replacing an existing field mounted, local pump control panel with a logic computer.
- Changing the elevation of a vessel nozzle or the discharge location of a vessel
- Installation of a bypass around a section of equipment.
- Installation of a parallel piece of equipment, such as a standby pump.
- Replacing a control valve with one of a different size.

Changes in Company: A change in facilities occurs whenever a change is made to plant services or utilities would not necessarily appear on a P & ID. Examples:

- Emergency back-up systems.
- Power supply system.
- Plant security.
- Fire detection and prevention system.
- Adjacent processes/equipment.
- New construction (offices, warehouses)

Changes in Procedures: Temporary or permanent modifications of written procedures. Examples (except minor changes for clarification):

- Standard Operating Procedures.
- Preventative maintenance procedures.
- Inspection and testing procedures.
- Emergency operating procedures.
- Training procedures and requirements.

Changes in Process Technology: A change in the process technology occurs when the process or mechanical design is altered. A change in process technology may occur as a result of changes in the operating parameters (e.g., pressure, temperature), design inventories, instrumentation and control systems, or materials of construction. Examples:

- An increase in the (NAME OF PROCESS) inventory.
- Equipment unavailability.
- Installation of new equipment, such as a computer.
- Change in operating pressure (or temperature, or flow rate, etc.)

Major Change: A modification which has significant impact on process conditions or system parameters. Examples:

- Installation of an additional pumping system
- Increase in toxic chemical inventory
- Decommissioning major pieces of equipment
- Installation of a significant amount of temporary piping
- Installation of a distributed control system
- Change in process variables, such as a significant increase or decrease in flow, temperature, or pressure

Minor Change: A modification which does not have a major impact on process conditions or system parameters. Examples:

- Installation of process instrumentation
- Change in written Standard Operating Procedure
- Revision to document forms
- Replacement in Kind
- Any process or equipment change performed in accordance with established design specifications. A "replacement in kind" does not require enactment of the

Management of Change Procedure

Examples:

- Replacement of parts or equipment that meet the same design requirements and specifications
- Replacement of parts or equipment that require no changes to PSI

Temporary Change: A change with a limited and clearly specified duration. The time limit for a temporary change is not to exceed seven days. If necessary, a seven day extension may be requested. No more than two extensions should be required. Any change with duration of greater than six weeks should follow procedures for a permanent change. Examples:

- Temporary piping, clamps, connections, utility connections, or hoses
- Temporary operation with specific safeguards bypassed or inoperative
- Temporary changes to operating procedures

Emergency Procedures

A situation may be treated as an emergency in order to prevent an incident that could result in exposure of personnel, the environment, or the company to unreasonable risk. A situation only qualifies as an emergency if applying the normal MOC procedure would not mitigate the situation in time to avoid potential accidents. In emergency situations, the following procedure will be used:

1. Assemble an emergency task team composed of two or three trained and qualified operators Contact the (NAME OF PROCESS) Supervisor for approval of changes.

2. Emergency team examines the safety and environmental aspects of the change.

3. If the change can be implemented safely, conduct the change.

4. Complete the MOC form as soon as possible after the emergency.

Maintenance, Tests & Inspections

General

The Planned Maintenance System is an important part of the Mechanical Integrity Program. It provides for:

- Identification and scheduling of tests and inspections
- Documentation of tests and inspections
- Development of maintenance procedures
- Scheduling of periodic maintenance procedures

The 3 sections of the Planned Maintenance System are:

1. Inspections
2. Testing
3. Maintenance

Inspections

Daily Inspections are carried out every (TIME PERIOD) as operators tour the Company and record system parameters. They are trained to recognize deficiencies in material conditions and out of specification parameters. Inspections that are scheduled for daily accomplishment are listed and recorded on the daily logs.

Other Inspections range from simple monthly checks of air units to complex annual system inspection. These inspections are scheduled by the (NAME OF PROCESS) Supervisor.

Testing

Tests are more complex than inspections. They require either removal of a component from the system or abnormal manipulation of the system to ensure a component functions properly. All tests are scheduled and controlled by the (NAME OF PROCESS) Supervisor.

Planned Maintenance

Planned Maintenance items generally require a high level of system knowledge to properly align, isolate and prepare the system for maintenance. The opportunity for accidental release of (NAME OF PROCESS) is greater during these times than during normal operation. The (NAME OF PROCESS) Supervisor will:

1. Schedule all maintenance
2. Assign personnel who have the knowledge and experience
3. Oversee the conduct and completion of maintenance

Incident Investigations

General

Incident investigation is the process of identifying the underlying or basic causes of incidents and implementing steps to prevent similar events from occurring. The intent of an incident investigation is to learn from past experiences and avoid future events of the same nature.

As an aid to prevention all incidents that resulted in, or could reasonably have resulted in a catastrophic release of highly hazardous chemical in the workplace will be thoroughly investigated. An incident investigation will be initiated as promptly as possible, but no later than 48 hours following the incident.

Investigation Team

An investigation team, consisting of the Plant Safety Coordinator, (NAME OF PROCESS) Supervisor, one (NAME OF PROCESS) Operator/Technician, and one contractor representative (if contractors are involved) will thoroughly investigate and analyze the incident. Other members may be added at the discretion of management

Incident Report

A report will be prepared at the conclusion of the investigation that includes at a minimum:

- Date of incident

- Date investigation began
- Description of the incident
- Factors that contributed to the incident
- Recommendations resulting from the investigation
- Post Incident Actions

Corrective Actions detailed in the incident report will be promptly addressed and resolved along with other report findings and recommendations. Resolutions and corrective actions will be documented.

Report Review will be conducted with all affected personnel whose job tasks are relevant to the incident findings including contract employees where applicable. Incident investigation reports will be retained for five years

Process Safety Management

(NAME OF PROCESS COVERED BY PSM)

The (COMPANY) at (COMPLETE ADDRESS) has implemented a Process Safety Management (PSM) Program in compliance with OSHA Standard 29 CFR 1910.119. The purpose of this program is to prevent or minimize the consequences of catastrophic releases of toxic, reactive, flammable or explosive chemicals and to ensure that employees are not exposed to undue risk.

Our PSM program details specific precautions and procedures affecting the safe operation and maintenance of our (NAME OF PROCESS) process. This program has been developed with the participation of employees involved with the operation and maintenance of this process.

All employees have access to the PSM manuals and files, under the following conditions:

1. Approval is required to remove any documents from the file.
2. Original documents may not be removed from the file area.
3. Copies of original documents will be provided, upon request, within 10 working days.
4. No markings will be made on original documents.

Training

Those employees involved with the operation and maintenance of the refrigeration system, including any contractor employees, will complete specific training as detailed in the PSM program

I verify that I have read (or had read to me) and understand I have been informed of the existence of the Process Safety Management program for (NAME OF PROCESS). I acknowledge that I may contact the Safety Coordinator for answers to any questions I may have about this program.

Employee Name _____
Department _____
Date _____
Signature _____

Process Safety Information

List of Process Equipment

ITEM	CATEGORY	Description	MFG	MDL #	Type	Location	Qty

The following SOP is for an Ammonia Process and is for ***EXAMPLE ONLY***.

SOP: Ammonia System Line Break/Entry Permit Procedures

Purpose

To ensure the safe entry and/or repair to the refrigeration system, the Ammonia System Entry Work Permit will be properly completed prior to initiating any action. The permit will be posted in the area where the work is to be conducted. All the Operating Procedures involved in the work will be followed, including all safety procedures

Procedure

1. Persons needing to enter any ammonia systems line will report to an authorized person and obtain a entry permit form and valve tagging sheet.

2. All employees involved are to receive proper training concerning ammonia systems entry.

3. The Refrigeration Manager will ensure that all precautions listed on the card are taken and grant permission for the tasks to commence.

4. The system involved must be pumped out / purged.

5. Proper safety equipment to be issued, which may include:
    a. Respirators.
    b. Face Shields.
    c. Cold water hose.
    d. Safety gloves.
    e. Protective suit(s).

6. A qualified supervisor has discussed the job with all persons involved.

7. Attending person with rescue equipment is on hand if needed.

8. Qualified supervisor on hand at time of opening.

9. A method to summon help and a rescue team properly equipped and trained on alert.

10. All valves, opened, closed or propped open, are tagged with information noting normal valve position.

11. Be sure that in case of an emergency an escape route is planned and that all production employees are cleared from the area.

12. Close 1/4" hand valve on pressure gauge on system pumped out. Remove gauge and slowly open valve and check to make sure there is a vacuum on system.

13. Ensure that during the final checkup all valves are returned to normal (using the valve tagging sheet) and the system has been checked for leaks and is in operable condition.

Systems Entry Work Permit

(Name Of Process)

This permit is required for opening system, removal of fittings, piping repairs, etc.

Equipment / System _____

Date Issued _____

Date Expires (Date-Time) _____

Equipment Location _____

Work being conducted by: ☐ Employee ☐ Contractor

Description of Work:

Precautions & Pre-Work Requirements:

Check all applicable requirements when completed

- ☐ *Confined Space Permit Issued*
- ☐ *Hot Work Permit* Issued and posted
- ☐ Water Hoses stationed and pressurized
- ☐ Work & Safety Precautions reviewed with all workers
- ☐ Escape Route planned and discussed
- ☐ Safety Equipment identified and staged
- ☐ Defrost Coil installed on system to be worked, when applicable.
- ☐ System Isolated, voided and depressurized
- ☐ All Valves out of Normal Position are tagged with Maintenance Position
- ☐ *Lockout - Tagout completed*

Process Safety Management Awareness Compliance

***CAUTION**: When cutting into or opening an isolated system, some residual fluid may be released. Take steps to anticipate this event and provide protection for workers and the environment.*

Supervisor _____ Date _____

System Restoration Procedure *(All items listed below must be completed)*

1. Valve line up has been returned to normal
2. Leak check competed
3. All Operators notified of completed repairs
4. System is in safe normal operating condition
5. Written Machinery History & Log Entry detailing completed repairs

Supervisor _____ Date _____

Signature _____

Retain this permit on file for one year

System Valve Lineup for System Entry Permit

Tag Number	**Valve Isolation Device Number**	**Valve / Isolation Device Name**	**Normal Position (Open - Shut)**	**MaintenancePosition (Open - Shut)**	**Returned to Normal Position**	**Locked (Yes - No)**

Process Safety Management Awareness Compliance

Critical Safety Device Permit
(Name of Process)

_____

This permit is required whenever a Critical Safety Device is to be taken Out of Service or is Not Functional
Critical Safety Device / System _____
Date Issued_____
Expires (Date & Time) _____
Safety Device Location _____
Safety Device Function _____
Critical Safety Device Out of Service Potential Hazards/Problems (list)
Operation & System Limitations w/ Safety Device Out of Service
Operation of equipment/system allowed for _____ days
Permit must be reissued every 2 days for continued use
Additional safety precautions, listed below. are required for system operation
Other

_____

Requirements for removing Critical Safety Device from Service
(Check Applicable Requirements)

- ☐ Monitor Affected Systems Hourly
- ☐ Danger Tag affixed to Critical Safety Device
- ☐ Written Log entry detailing Safety Device Out of Service with safety instructions
- ☐ Critical Safety Device Permit Posted
- ☐ All operators notified additional safety precautions implemented
- ☐ Other _____
- ☐ *All Precautions and Procedures have been implemented to provide additional Safeguards while Critical Safety Device is Out of Service*

Supervisor _____ Date _____

System Restoration Procedure (All items listed below must be completed)

- Critical Safety Device Returned to Normal Operation

- Satisfactory Systems Inspection Completed
- All operators notified of Safety Device Returned to Service
- Written Log Entry detailing Critical Safety Device Returned to Service

Supervisor _____ Date _____

Retain this permit on file for one year

Process Safety Information

Hazards of (NAME OF PROCESS CHEMICAL)

[LIST HAZARDS HERE.]

Block Flow Diagram

[INSERT PROCESS BLOCK DIAGRAM HERE.]

Piping and Instrument Diagrams

[LIST LOCATION OF DRAWINGS.]

Process Chemistry

(NAME OF PROCESS) is a _____ process. The (CHEMICAL NAME) used in the (NAME OF PROCESS), is processed to _____.

The (NAME OF PROCESS) cycle consists of (NUMBER) of processes;

[LIST & BRIEFLY DESCRIBE EACH PROCESS, THE PHYSICAL AND CHEMICAL CHANGES THAT OCCUR IN EACH PROCESS.]

Maximum Intended Inventory

The maximum intended (NAME OF PROCESS CHEMICAL) inventory at this Company is (NUMBER OF POUNDS MASS OR GALLONS OR CUBIC FEET). This is based upon contractor calculations and charges to the system since start-up. The normal operating inventory is _____.

Technology of Process Changes

Briefly describe the technology used in the process, unique attributes of the process and who controls the technology

(IE: YOUR COMPANY, STANDARD PROCESS, ACCEPTED INDUSTRY STANDARDS FOR THE PROCESS SUCH AS IIAR FOR AMMONIA REFRIGERATION)

Materials of Construction

The (NAME OF PROCESS) piping system was constructed of (LIST MATERIALS) conforming to ASTM specification _____ for service at or above ____ degrees F and _____ for service below ____ degrees F. All pipe greater than or equal to 2-1/2 " is schedule _____ and all pipe less than or equal to 2" is schedule ____. All future piping will conform to these standards.

All Pressure Vessels, compressors, reactors, storage vessels,, oil pots, and any other equipment in the (NAME OF PROCESS) system is designed and built according to industry standards. Specific data is located in the equipment manuals in the (LIST LOCATION WHERE MANUALS ARE MAINTAINED) office.

Electrical Classification

The electrical classification for the (NAME OF PROCESS) system conforms to the safety code for mechanical (NAME OF PROCESS) ANSI/ASHRAE Standard ____.

Pressure Relief System Design

The (NAME OF PROCESS) pressure relief system is designed in accordance with the American National Standard for Equipment Design and Installation of (NAME OF PROCESS) Mechanical (NAME OF PROCESS) Systems ANSI/IIAR- _____ and ANSI/ASHRAE _____.

Refer to the Operating Procedures for more information. A list of the Pressure Relief Valves is provided.

Ventilation System Design

The _____ ventilation system is designed in accordance with the American National Standard for Equipment, Design, and Installation of (NAME OF PROCESS) Systems ANSI/IIAR _____ Section _____

[DESCRIBE VENTILATION SYSTEM: NUMBER OF SUPPLY & EXHAUST FANS, SPECIAL DUCTING, CONTROLS, VOLUME FLOW RATE, ALARMS, ETC.]

Design Codes and Standards

The (NAME OF PROCESS) system is designed in accordance with the American National Standard for Equipment Design and Installation of (NAME OF PROCESS) Systems ANSI/IIAR _____ Electrical Safety Code for (NAME OF PROCESS) ANSI/ASHRAE Standard 15; and the National Electric Code.

Material and Energy Balances

Describe the material and energy balance to address stresses added to the (NAME OF PROCESS) system as a result of chemical reactions and the precautions taken to alleviate this effect.

Safety Systems

Safety systems for the (NAME OF PROCESS) system are pressure relief devices, interlocks, cutouts, (NAME OF PROCESS) sensing devices, automatic shutdown controls, sprinkler and alarm systems.

Detailed Technical information in contained in manufacturer technical manuals in the (NAME OF PROCESS) Office.

List of Process Equipment

[LIST ALL PSI EQUIPMENT.]

Design Codes & Standards

[LIST ALL APPLICABLE DESIGN CODES AND STANDARDS.]

Compliance

The material, equipment and procedures employed in the (NAME OF PROCESS) system complies with recognized and generally accepted good engineering practices.
All existing equipment was designed and constructed in accordance with codes, standards, or practices that are still in general use.

Site Plan

[PLACE SITE PLAN HERE OR REFERENCE YOUR EMERGENCY ACTION PLAN.]

RESPIRATORY PROTECTION PROGRAM

PURPOSE:

Improper use of or failure to wear respiratory protection when required can have devastating effects on the life and/or health of workers. Lack of a respirator, early removal of a respirator and improperly fitting respirators has resulted in needless worker injury and death.

The purpose of this policy is to establish a respiratory protection program for PNT Consulting LLC that ensures that workers are provided with the necessary information, training, and equipment to protect themselves from respiratory hazards in the workplace, and complies with OSHA, ANSI and other applicable standards and regulations.

POLICY:

It is management's responsibility to implement this program at no cost to the employees and it is the employee's responsibility to comply with all aspects of this program. Any voluntary use of respiratory protection equipment by employees shall be governed by the provisions of this program, also at no expense to the employees.

PROCEDURE:

A. Responsibilities

• Management - Has the responsibility of overseeing the implementation of this policy and assigning program administrators for each site location. These administrators must be suitably trained and have the appropriate accountability and responsibility to fully manage the site respiratory program. The program administrator will report, at least annually, on the effectiveness of the program to management, and be authorized to make appropriate changes to the site program. The administrators will be identified by name in the specific site program.

• Supervisory - It is the responsibility of the supervisor to ensure that all personnel under their control are completely knowledgeable of the respiratory requirements of this program. Supervisors are to ensure that employees have been trained and are medically fit to use respiratory equipment safely. It is the supervisors' duty to monitor the employees' diligence in following procedure and take appropriate action when deficiencies are observed.

• Employees - It is the responsibility of the employee to be aware of and practice the information presented in the training. Specifically, employee responsibilities are to report equipment malfunctions, seal check their respirator before every use, and to report medical or physical changes that could affect respirator use.

Hazard Assessment

Respiratory hazard determination starts at the planning stage of a job. PNT Consulting LLC will identify all known hazards as required by the hazard communication standard. Evaluation of the hazards consists of exposure duration, potential for contact, and known or potential concentrations. When the hazard is a federally controlled substance, that hazard shall be assessed and monitored as dictated by that specific standard. A respiratory hazard may not have an established OSHA permissible exposure limit documented; however, all provisions of this program will be enforced to protect the health of the employees.

Acceptable methods for estimating respiratory hazards include:

- Personal exposure monitoring is the most reliable and accurate method to determine exposure.
- Use of objective data – This is the use of data obtained from industry studies, trade associations or from tests conducted by chemical manufacturers. The objective data shall represent the highest contaminant exposures likely to occur under reasonably foreseeable conditions of processing, use or handling. If objective data is used for assessment, the data must be documented as part of the written program.
- Mathematical Approach – The use of physical and chemical properties of air contaminates, combined with information on room dimensions, air exchange rates, contaminant release rates, and other pertinent data including exposure patterns and work practices to estimate maximum exposure levels in the work place.
- Where employee exposure cannot be identified or reasonably estimated, the atmosphere will be considered immediately dangerous to life and health (IDLH). Also atmospheres that are oxygen deficient will be treated as IDLH conditions.
- Accidental release or emergency response must be a consideration when estimating hazard exposure.

C. Hazard Control

1. Engineering Controls: This should be the first consideration when evaluating hazard exposure.
   - Substitution of a less or non-toxic substance to replace a more harmful one. Example: Sandblasting with black grit instead of silica sand.
   - Isolation or encapsulation of the process. Example: To spray asbestos insulation with glue paste to lessen exposure levels.
   - Ventilation to remove contamination from the work area before exposure. Example: Mechanical dust collection system installed to capture contaminants and reduce buildup.

2. Administrative Controls:
   - Especially effective for repetitive stress and heat stress control, crew rotation could increase productivity in contaminated atmospheres.
   - Adjust the length of the work shift. Instead of two 12 hour shifts, it may be more effective to have three 8 hour shifts.
   - Change scheduled work to limit the number of employees exposed. The scheduling of other work near the exposure area could be limited until exposure is gone.

3. Personal protective devices for the control of respiratory hazards are to be used as a last resort, and only when other means of control are not practical or feasible. Respiratory protection may be required while implementing engineering controls, or in conjunction with other control methods. Engineering controls may only lessen the exposure, but required to be implemented along with personal protective devices.

D. Respirator Selection

Selecting the proper respirator can be very complex and is critical in having an effective respiratory program. The program administrator must solicit information from all available professional resources concerning exposure controls.

Factors that must be considered include:

- The nature of the hazardous operation or process
- The type of respiratory hazard (including physical properties, oxygen deficiency, physiological effects on the body, concentration of toxic material or airborne radioactivity level, established exposure limits for the toxic materials, established permissible airborne concentration for radioactive material, and established immediately dangerous to life or health concentration for toxic material)
- The location of the hazardous area in relation to the nearest area having respirable air
- The period of time for which respiratory protection must be worn
- The activities of workers in the hazardous area

- The physical characteristics and functional capabilities and limitations of the various types of respirators
- Respirator-assigned protection factors listed in Attachment I, Table 1

Respirators for use under IDLH conditions:

The required respiratory protection for IDLH conditions caused by the presence of toxic materials, or a reduced percentage of oxygen, is a combination full face piece pressure demand supplied air respirator (SAR) with auxiliary self-contained air supply. For rescue applications, a full face piece pressure demand SCBA certified by NIOSH for a minimum service life of thirty minutes is acceptable.

When respirators are worn under IDLH conditions, at least one standby person shall be present in a safe area. The standby person shall have the proper equipment available to assist the respirator wearer in case of difficulty. Communications (visual, voice, signal line, radio, or other suitable means) shall be maintained between the standby person and the wearer. While working in the IDLH atmosphere, the wearer shall be equipped with safety harness and safety lines to permit removal to a safe area, if necessary. Provisions for rescue other than safety harness and lines may be used, if equivalent.

E. Breathing Air Quality

Workers using supplied breathing air equipment shall be thoroughly trained in its use.

Breathing air is typically supplied from cylinders or via a compressor. Appropriate measures shall be taken to ensure that

all compressed breathing air meets at least the requirements for Grade D breathing air described in ANSI/Compressed Gas

Association Commodity Specification for Air, G-7.1-1989, to include:

1. Oxygen content (v/v) of 19.5-23.5%;
2. Hydrocarbon (condensed) content of 5 milligrams per cubic meter of air or less;
3. Carbon monoxide (CO) content of 10 ppm or less;
4. Carbon dioxide content of 1,000 ppm or less; and
5. Lack of noticeable odor.

Suppliers of breathing air cylinders shall provide PNT Consulting LLC with a certificate of analysis with each delivery certifying that the breathing air meets the requirements for Grade D breathing air; and that the moisture content in the cylinder does not exceed a dew point of -50 deg.F (-45.6 deg.C) at 1 atmosphere pressure. The certificate shall have the name of the breathing air supplier, the testing technician and date of test.

Breathing air cylinders shall be tested and maintained as prescribed in the Shipping Container Specification Regulations of the Department of Transportation (49 CFR part 173 and part 178).

Breathing Air Compressors

Compressors used to supply breathing air to respirators shall be constructed and situated so as to:

1. Prevent entry of contaminated air into the air-supply system;
2. Minimize moisture content so that the dew point at 1 atmosphere pressure is 10 degrees F (-5.56 deg.C) below the ambient temperature;
3. If required to ensure delivery of Grade D air to the user, provide suitable in-line air-purifying sorbent beds and filters. All filters, cartridges and canisters shall be labeled and color coded with the NIOSH approval label and the label shall

remain legible. Sorbent beds and filters shall be maintained and replaced or refurbished periodically following the manufacturer's instructions. A tag containing the most recent change date and the signature of the person authorized by the employer to perform the change shall be attached to the equipment.

4. For compressors that are not oil-lubricated, PNT Consulting LLC shall ensure that carbon monoxide levels in the breathing air do not exceed 10 ppm.
5. For oil-lubricated compressors, PNT Consulting LLC shall use a high-temperature or carbon monoxide alarm, or both, to monitor carbon monoxide levels. If only high-temperature alarms are used, the air supply shall be monitored at intervals sufficient to prevent carbon monoxide in the breathing air from exceeding 10 ppm.
6. The air shall be routinely tested to ensure that it meets Grade D requirements.

In addition, a stand-by attendant shall be on watch anytime workers are using breathing air supplied directly by a compressor.

Breathing air couplings shall be incompatible with outlets for nonrespirable worksite air or other gas systems. No asphyxiating substance shall be introduced into breathing airlines.

F. Training

To protect employees from exposure to respiratory hazards using OSHA and ANSI standards as minimum guidelines, all employees who will wear respiratory protection will be trained on this policy. Training will be provided prior to job assignment where respirator equipment is required, and annually thereafter. Additional training is required when there are deficiencies in the employee's knowledge/skills or when there is a change in the work place or respiratory equipment that renders previous training obsolete. The training will include the following:

- Responsibilities of employees and supervisors
- How, why and for what jobs we use respirators
- Hazard assessment including limitations of respirators
- Hazard control
- Respirator selection
- Medical evaluation
- Respirator fit test
- Maintenance, care and storage
- Medical surveillance
- Program evaluation

All training shall be conducted in a way that is understandable to the employee, and is documented.

1. Why use respiratory protection
   - The nature, extent and effects of respiratory hazards
   - Consequences of improper fit, usage and maintenance on respirator effectiveness
2. Limitations and capabilities of the respirator
   - Air purifying respirators that filter either particles, or absorbing vapors and gases
   - Air supplying respirators that supply air from an uncontaminated source
   - Limitations of respirators in IDLH atmospheres and for emergency use only
3. How respirators are inspected, donned, removed, seal checked and worn

- What to do if respirators have defects
- Who to report problems to during use
- Proper technique for donning and removing the respirator, and how to store when not in use
- How to seal check using the positive and/or negative pressure method

4. Methods of maintenance and storage
   - Visual inspection of parts for worn or defective items
   - How to keep the issued respirator clean and sanitary
   - Requirement to disinfect and sanitize before reissue to other employees
   - Proper storage in a cool, clean and dry location, placing them in a clean, sealed plastic bag after drying
5. Medical signs and symptoms that may limit or prevent the effective use of respirators
   - An awareness of physical conditions that may indicate warning signs
   - An obligation to report signs and symptoms and the opportunity for medical reevaluation
   - Changes in weight (gain or loss)
   - Physical changes in facial structure
   - Changes in endurance, stability or general health
   - Medication for illness

G. Medical Evaluation

All employees whose job classification may require use of respiratory protection shall be evaluated and certified by a physician or a licensed health care professional (PLHCP) as being "medically fit" to wear a respirator. For new hires, the medical evaluation shall be made before any use of respiratory equipment. Thereafter, the evaluation shall occur at a minimum annually. The medical evaluation consists of, at a minimum, the administration of a health questionnaire meeting federal guidelines or provisions for a physical examination by a PLHCP that elicits the same information as the questionnaire. The PLHCP shall be provided with supplemental information by the employer on the description of the job classification, possible work conditions and any additional personal protective equipment. that may be required of the employee while using respiratory equipment. Also a copy of this program will be given to the PLHCP for reference along with the OSHA standard.

The administration of the health questionnaire will be done during work hours and at no cost to the employee. The information on the questionnaire shall remain confidential between the PLHCP and the employee. The employee must have access to the PLHCP for discussion and asking questions concerning their medical evaluation. PNT Consulting LLC will only receive a recommendation of the employee's ability to wear respiratory equipment.

If an employee is restricted by the PLHCP from wearing a negative pressure respirator, but otherwise physically able to perform duties with a powered air respirator, then reasonable accommodations will be made by the program administrator not to have this restriction limit the employee's ability to perform his job.

H. Respirator Fit Test

Respirator fit testing is required of all employees prior to using a positive or negative tight fitting respirator. The fit test will be specific for respirator manufacturer, model and size. This test is to be repeated annually, or if there is a change in the respiratory equipment. Some substance specific standards may call for more frequent testing and dictate a specific protocol, which would take precedence over this program. A change in the employee's physical appearance can affect the seal of a respirator and may require re-testing. If the respirator is unacceptable to the employee due to comfort, irritation, or inability to get a seal, the employee will be offered a reasonable selection for an alternate choice of respirators.

The employee will be asked to wear the proposed respirator for a period of time to become familiar with the feel and fit. No obstacles can be between their face and the sealing surface of the respirator, including facial hair of 24 hours or more growth, side burns that extend into the sealing surface or hair that is long enough to prevent proper function of the respirator.

Jewelry, caps, hats, scarves and certain safety gear must be evaluated as part of the fit test if the employee is permitted or required to wear them during work. OSHA did not restrict the use of contact lens with respirators, but did mandate that the use of corrective lens shall not interfere with the seal of the respirator. Any adaptive devices for vision correction with respiratory equipment will be supplied at no cost to the employee. The employee will be instructed on how to field check respiratory equipment. The positive and negative seal check methods of verifying a good seal shall be required before each and every entry into a respiratory hazard area. These seal checks are not to be considered a fit test.

Positive Seal Check

A positive seal check is accomplished by effectively sealing the exhalation valve and slowly exhaling. This should create a slight, positive pressure inside the face piece for a short period of time. The participant must be careful not to exhale too fast or small leaks can be nullified and/or large leaks artificially created.

Negative Seal Check

A negative seal check is accomplished by effectively sealing the inhalation ports of the respirator and inhaling slowly. The participant should be able to create a negative pressure inside the respirator and hold it for a short period of time. Inhaling too fast may nullify small leaks and/or artificially create other leaks.

Fit Test (See Attachment V, Table 2 for "Acceptable Fit-Testing Methods")

- Qualitative fit test – a pass/fail test that relies on the subject to detect a challenge agent and is predicated on an individual's sensory response.
- Quantitative fit test – uses an instrument to measure the challenge agent inside the respirator and gives a numerical value to the test data.

If the qualitative testing is used, the employee should be informed of the exposure limitations. A limit of 10 times the permissible exposure level for an 8-hour duration is the maximum exposure for either a half mask, or full face piece negative pressure respirator.

For OSHA guidelines, refer to Attachment V, Table 2 for Acceptable Fit Test Methods.

Irritant Smoke Protocol

Irritant smoke protocol for qualitative fit testing is very effective, since it is the only challenge agent that does not rely on a voluntary response. This type of test requires that the tester be well trained in the correct and safe use of the irritant smoke tubes. The smoke tubes can be a health hazard if not used properly and in a well ventilated room. Specific step by step procedures are referenced in Attachment III.

I. **Maintenance and Care**

PNT Consulting LLC will provide for the cleaning and disinfecting, storage, inspection and repair of respirators that are issued to their employees. There are specific guidelines to follow in Attachment IV to ensure the respirators are clean and disinfected. Respirators designated for the exclusive use of an employee shall be the responsibility of that employee to maintain and keep in a sanitary condition. Respirators issued to more than one employee shall be cleaned and disinfected before being worn by different individuals. Respirators maintained for emergency, training, or fit testing use shall be cleaned and disinfected after every use.

Storage

Respirators shall be stored to protect them from damage, contamination, dust, sunlight, extreme temperatures, excessive moisture and damaging chemicals. They shall be packed or stored to prevent deformation of the face piece. Emergency respirators shall, in addition, be kept accessible to the work area and stored in easily identifiable coverings. Reference the

manufacturer's instructions for other recommendations.

Inspection

Respirators are inspected on a regular basis and employees are instructed on how to inspect their respirator. All respirators used on a routine basis shall be inspected before each use and during cleaning. All emergency respirators shall also be inspected at least on a monthly basis. Respirator inspection shall include the tightness of connections and the condition of various parts including, but not limited to, the face piece, head straps, valves, gaskets, connecting tubes, cartridges, canisters and filters. Also, check all elastic parts for deterioration and pliability. Inspection of self-contained breathing apparatus shall be done only by trained technicians competent with that specific brand, make and model of respiratory equipment. The technician conducting the inspection shall certify the inspection by attaching a signed and dated tag or label to the equipment.

Repairs

Equipment that is defective, broken or otherwise in need of repair shall be identified immediately by attaching a red tag and stating the reason it is out of service. Repairs to respirator equipment shall be made by competent employees and only with the manufacturers' recommended replacement parts. Absolutely no substitution of parts is allowed that is not authorized by the NIOSH approval.

J. Medical Surveillance

Employees should be aware of medical conditions that would prevent or limit their use of respiratory equipment. Supervisors shall be informed when employees experience medical difficulties that may affect or be a result of respirator use. Substance specific hazards may require a specific medical monitoring procedure that requires biological testing. Employees will be required to complete a medical questionnaire initially, and then further evaluation at the frequency determined by the medical evaluator.

K. Program Evaluation

The supervisor will monitor the work site for acceptance of and compliance with the written respiratory program. The supervisor will address issues where employees have had deficient respiratory issues, i.e. cartridge breakthrough and the respirator effectiveness. Employees will be asked questions about the effectiveness of the program and encouraged to offer suggestions for improvement including how the fit test protocol was performed, the maintenance procedures for care and storage of respirators and overall program. Periodic audits will be documented and reviewed by the program administrator. The program administrator will report, at lease annually, to the management on the effectiveness of the total program.

Respiratory Protection Program

Attachment I - Table 1: Assigned Protection Factors

Type of respirator	**Respiratory inlet covering**	
	Half Mask [1]	**Full Facepiece**
Air purifying	10	100
Atmosphere supplying		
SCBA (demand) [2]	10	100
Airline (demand)	10	100

Type of respirator	**Respiratory inlet covering**			
	Half mask	**Full Face**	**Helmet/ hood**	**Loose-fitting facepiece**
Powered air purifier	50	1000 [3]	1000 [3]	25
Atmosphere supplying airline				
Pressure demand	50	1000	-	-
Continuous flow	50	1000	1000	25
Self-contained breathing apparatus				
Pressure demand	-	[4]	-	-
Open/closed circuit				

1) Includes ¼ mask, disposable half masks, and half masks with elastomeric facepieces.
2) Demand SCBA shall not be used for emergency situations such as fire fighting.
3) Protection factors listed are for high-efficiency filters and sorbents (cartridges and canisters). With dust filters, an assigned protection factor of 100 is to be used due to the limitations of the filter.
4) Although positive-pressure respirators are currently regarded as providing the highest level of respiratory protection a limited number of recent simulated workplace studies concluded that all users may not achieve protection factors of 10,000. Based on this limited data, a definitive assigned protection factor could not be listed for positive-pressure SCBA's. For emergency planning purposes where hazardous concentrations can be estimated, an assigned protection factor of no higher that 10,000 should be used.

NOTE: Assigned protection factors are not applicable for escape respirators. For combination respirators, e.g., airline respirators equipped with an air-purifying filter, the mode of operation in use will dictate the assigned protection factor to be applied.

Attachment II – Respirator Selection

Logic Guide: Reference ANSI 288.2 – 1992 7.2.2.

Respirator selection involves reviewing each operation to (a) determine what hazards may be present (hazard determination) and (b) select which type or class of respirators can offer adequate protection.

Hazard Determination Steps

The nature of the hazard shall be determined as follows:

- Determine what contaminant(s) may be present in the work place.
- Determine whether there is a published Threshold Limit Value, Permissible Exposure Limit, or any other available exposure limit or estimate of toxicity for the contaminant(s). Determine if the IDLH concentration for the contaminant is available.
- Determine if there is a comprehensive health standard (e.g., lead, asbestos) for the contaminant(s). If so, there may be specific respirators required that influence the selection process.
- If the potential for an oxygen-deficient environment exists, measure the oxygen content.
- Measure or estimate the concentration of the contaminant(s).
- Determine the physical state of the contaminant. If an aerosol, determine or estimate the particle size. Determine if vapor pressure of the aerosol is significant at the maximum expected temperature of the work environment.
- Determine whether the contaminant(s) present can be absorbed through the skin, produce skin sensitization, or be irritating or corrosive to the eyes or skin.
- Determine for a gas or vapor contaminant(s) if a known odor, taste, or irritation concentration exists.

Selection Steps

The proper respirator shall be selected as follows:

- If unable to determine what potentially hazardous contaminant may be present, the atmosphere shall be considered IDLH.
- If no exposure limit or guideline is available and estimates of the toxicity cannot be made, the atmosphere shall be considered IDLH.
- If a specific standard exists for the contaminant, follow those guidelines/requirements.
- If there is an oxygen-deficient atmosphere, the type of respirator selected depends on the partial pressure and concentration of oxygen and the concentration of the other contaminant(s) that may be present.

- If the measured or estimated concentration of the contaminant(s) is considered IDLH, reference "Respirators for use under IDLH conditions" at the end of this guide.

- Divide the measured or estimated concentration of each contaminant by the exposure limit or guideline to obtain a hazard ratio. When two or more substances are present, consideration needs to be given if there is a synergistic or combined effect of exposure rather than considering each substance individually. Select a respirator with an assigned protection factor greater than the value of the hazard ratio, as listed in Attachment I, Table 1.

- If the contaminant(s) is a gas or vapor only, select a device with an assigned protection factor that is greater than the hazard ratio. The concentration shall also be less than the maximum use concentration of the cartridge/canister.

- If the contaminant is a paint, lacquer, or enamel, select a respirator approved specifically for paint mists or an atmosphere-supplying respirator. (Approval label or regulatory provision may preclude use for some paints.)

- If the contaminant is a pesticide, select a respirator and filtration system specifically approved for pesticides or an atmosphere-supplying respirator. (Approval label may preclude use for some pesticides.)

- If the contaminant is an aerosol with an unknown particle size, or less than 2 um (MMAD), a high-efficiency filter shall be used.

- If the contaminant is a fume, use a filter approved for fumes or a high-efficiency filter.

- If the contaminant is an aerosol with a particle size greater than 2 um (MMAD), any filter type (dust, fumes, mist, or high efficiency) may be used.

- If the contaminant is a gas or vapor and has poor warning properties, the use of an atmosphere-supplying respirator is generally recommended.

- When atmosphere-supplying respirators cannot be used because of the lack of a feasible air supply, or the need for worker mobility, air-purifying devices should be used only if:
    1. The air-purifying respirator has a reliable end-of-service-life indicator that will warn the user prior to contaminant breakthrough or,
    2. A cartridge change schedule is implemented based on cartridge service data including desorption studies (unless cartridges are changed daily), expected concentration, pattern of use, duration of exposure, and the chemical does not have a ceiling limit.
- Respirators for use under IDLH atmospheres:

    The required respiratory protection for IDLH conditions caused by the presence of toxic materials, or a reduced percentage of oxygen, is a combination full face piece pressure demand supplied air respirator (SAR) with auxiliary self-contained air supply. For rescue applications, a full face piece pressure demand SCBA certified by NIOSH for a minimum service life of thirty minutes is acceptable.

    When respirators are worn under IDLH conditions, at least one standby person shall be present in a safe area. The standby person shall have the proper equipment available to assist the respirator wearer in case of difficulty. Communications (visual, voice, signal line, intercom, radio or other suitable means) shall be maintained between the standby person and the wearer. While working in the IDLH atmosphere, the wearer shall be equipped with a safety harness and lifeline to permit removal to a safe area, if necessary. Provisions for rescue other than harness and lifeline may be used, if equivalent.

- Special considerations for confined space entry into IDLH conditions are not addressed in this policy.

Use and duration of cartridges

Contaminant (1)	Maximum Concentration	Maximum Use Time (2) (Hours)
1,3 Butadiene	50	1
Ammonia	100	4
Benzene	10	8
Benzene	50	4
Chemicals not specified (3)	NA	1
Naphtha	100	4
Naphtha	500	2
Particulates (including dusts, mists, welding fumes)	NA	8
Sulfur Dioxide	50	8
Total Hydrocarbons (as n-hexane)	100	4
Total Hydrocarbons (as n-hexane)	500	1

1. If more than on contaminant is present, use the lowest maximum use time.
2. Cartridges should be changed out if the contaminant can be detected inside the respirator mask, regardless of the maximum use time.
3. Cartridges for chemicals not listed should be used for only 1 hour. This will err on the side of safety. If specific information is needed on a particular chemical, consult with the MSDS or your supervisor.

Attachment III - Fit Testing

If the test subject is not familiar with using a particular respirator, the test subject shall be directed to don the face piece several times and to adjust the straps to become adept at setting the proper tension on the straps.

A. Assessment of comfort shall include a review of the following points with the test subject and allowing the test subject adequate time to determine the comfort of the respirator:
   1. Position of the mask on the nose
   2. Room for eye protection
   3. Room to talk
   4. Position of mask on face and cheeks

B. The following criteria shall be used to help determine the adequacy of the respirator fit:
   1. Chin properly placed
   2. Adequate strap tension, not overly tightened
   3. Fit across nose bridge
   4. Respirator of proper size to span distance from nose to chin
   5. Tendency of respirator to slip
   6. Self-observation in mirror to evaluate fit and respirator position

C. The test subject shall conduct a user seal check, utilizing the negative and positive pressure seal check methods. Before conducting the negative and positive pressure checks, the subject shall be told to seat the mask on the face by moving the head from side-to side and up and down slowly while taking in a few slow deep breaths. Another face piece shall be selected and retested if the test subject fails the user seal check tests.

D. The test shall not be conducted if there is any hair growth between the skin and the face piece sealing surface, such as stubble beard growth, beard, mustache or sideburns which cross the respirator sealing surface. Any type of apparel, which interferes with a satisfactory fit, shall be altered or removed.

E. If the employee finds the fit of the respirator unacceptable, the test subject shall be given the opportunity to select a different respirator and to be retested.

F. Exercise regimen: Prior to the commencement of the fit test, the test subject shall be given a description of the fit test and the test subject's responsibilities during the test procedure. The description of the process shall include a description of the test exercise that the subject will be performing. The respirator to be tested shall be worn for at least 5 minutes before the start of the fit test

G. The fit test shall be performed while the test subject is wearing any applicable safety equipment that may be worn during actual respirator use, which could interfere with respirator fit.

H. Test exercises: The following test exercises are to be performed for all fit testing methods. The test subject shall perform exercises, in the test environment, in the following manner:

   1. Normal breathing: In a normal standing position, without talking, the subject shall breathe normally.
   2. Deep breathing: In a normal standing position, the subject shall breathe slowly and deeply, taking caution so as not to hyperventilate.
   3. Turning head side to side: Standing in place, the subject shall slowly turn his/her head from side to side between the extreme positions on each side. The head shall be held at each extreme momentarily so the subject can inhale at each side.

4. Moving head up and down: Standing in place, the subject shall slowly move his/her head up and down. The subject shall be instructed to inhale in the up position (i.e., when looking toward the ceiling).
5. Talking: The subject shall talk out loud slowly and loud enough so as to be heard clearly by the test conductor. The subject can read from a prepared text such as the Rainbow Passage, count backward from 100, or recite a memorized poem or song.

Rainbow Passage

When the sunlight strikes raindrops in the air, they act like a prism and form a rainbow. The rainbow is a division of white light into many beautiful colors. These take the shape of a long round arch, with its path high above, and its two ends apparently beyond the horizon. There is, according to legend, a boiling pot of gold at one end. People look, but no one ever finds it. When a person looks for something beyond reach, his friends say he is looking for the pot of gold at the end of the rainbow.

6. Bending over: The test subject shall bend at the waist as if he/she were to touch his/her toes. Jogging in place shall be substituted for this exercise in those test environments that do not permit bending over at the waist.
7. Normal breathing: Same as exercise (H,1).

Each test exercise shall be performed for one minute. The test subject shall be questioned by the test conductor regarding the comfort of the respirator upon completion of the protocol. If it has become unacceptable, another model of respirator shall be tried. The respirator shall not be adjusted once the fit test exercises begin. Any adjustment voids the test, and the fit test must be repeated.

Irritant Smoke Protocol

This qualitative fit test uses a person's response to the irritating chemicals released in the "smoke" produced by a stannic chloride ventilation smoke tube to detect leakage into the respirator.

A. General Requirements and Precautions

1. The respirator to be tested shall be equipped with high efficiency particulate air (HEPA) or P100 series filter(s).
2. Only stannic chloride smoke tubes shall be used for this protocol.
3. No form of test enclosure or hood for the test subject shall be used.
4. The smoke can be irritating to the eyes, lungs, and nasal passages. The test conductor shall take precautions to minimize the test subject's exposure to irritant smoke. Sensitivity varies, and certain individuals may respond to a greater degree to irritant smoke. Care shall be taken when performing the sensitivity screening checks that determine whether the test subject can detect irritant smoke to use only the minimum amount of smoke necessary to elicit a response from the test subject.
5. The fit test shall be performed in an area with adequate ventilation to prevent exposure of the person conducting the fit test, or the build-up of irritant smoke in the general atmosphere.

B. Sensitivity Screening Check

1. The test operator shall break both ends of a ventilation smoke tube containing stannic chloride, and attach one end of the smoke tube to a low flow air pump set to deliver 200 milliliters per minute, or an aspirator squeeze bulb. The test operator shall cover the other end of the smoke tube with a short piece of tubing to prevent potential injury from the jagged end of the smoke tube.
2. The test operator shall advise the test subject that the smoke can be irritating to the eyes, lungs, and nasal passages and instruct the subject to keep his/her eyes closed while the test is performed.

3. The test subject shall be allowed to smell a weak concentration of the irritant smoke before the respirator is donned to become familiar with its irritating properties, and to determine if he/she can detect the irritating properties of the smoke. The test operator shall carefully direct a small amount of the irritant smoke in the test subject's direction to determine that he/she can detect it.

C. Irritant Smoke Fit Test Procedure

1. The person being fit tested shall don the respirator without assistance, and perform the required user seal check(s).
2. The test subject shall be instructed to keep his/her eyes closed.
3. The test operator shall direct the stream of irritant smoke from the smoke tube toward the face seal area of the test subject, using the low flow pump or the squeeze bulb. The test operator shall begin at least 12 inches from the face piece and move the smoke stream around the whole perimeter of the mask. The operator shall gradually make two more passes around the perimeter of the mask, moving to within six inches of the respirator.
4. If the person being tested has not had an involuntary response and/or detected the irritant smoke, proceed with the test exercises.
5. The exercises identified in section H of this attachment shall be performed by the test subject while the respirator seal is being continually challenged by the smoke, directed around the perimeter of the respirator at a distance of six inches.
6. If the person being fit tested reports detecting the irritant smoke at any time, the test is failed. The person being retested must repeat the entire sensitivity check and fit test procedure.
7. Each test subject passing the irritant smoke test without evidence of a response (involuntary cough, irritation) shall be given a second sensitivity screening check with the smoke from the same smoke tube used during the fit test, once the respirator has been removed, to determine whether he/she still reacts to the smoke. Failure to evoke a response shall void the fit test.
8. If a response is produced during this second sensitivity check, then the fit test is passed.

Attachment IV - Respirator Cleaning Procedures

These procedures are provided as a guideline when cleaning respirators. They are general in nature, and the administrator as an alternative may use the cleaning recommendations provided by the manufacturer of the respirators used by their employees, provided such procedures are as effective as those listed here. Equivalent effectiveness simply means that the procedures used must accomplish the objectives set forth (i.e., must ensure that the respirator is properly cleaned and disinfected in a manner that prevents damage to the respirator and does not cause harm to the user).

A. Remove filters, cartridges, or canisters. Disassemble face pieces by removing speaking diaphragms, demand and pressure-demand valve assemblies, hoses, or any components recommended by the manufacturer. Discard or repair any defective parts.
B. Wash components in warm water (110° F maximum), with mild detergent or cleaner recommended by the manufacturer. A stiff bristle (not wire) brush may be used to facilitate the removal of dirt.
C. Rinse components thoroughly in clean, warm (110° F maximum), preferably running water. Drain.
D. When the cleaner used does not contain a disinfecting agent, respirator components should be immersed for two minutes in one of the following:
    1. Hypochlorite solution (50 ppm of chlorine) made by adding approximately one milliliter of laundry bleach to one liter of water at 110° F, or,
    2. Aqueous solution of iodine (50 ppm iodine) made by adding approximately 0.8 milliliters of tincture of iodine (6-8 grams ammonium and/or potassium iodide/100cc of 45% alcohol) to one liter of water at 110°F, or,
    3. Other commercially available cleansers of equivalent disinfectant quality when used as directed, if their use is recommended or approved by the respirator manufacturer.
E. Rinse components thoroughly in clean, warm (110° F maximum), preferably running water. Drain. The importance of thorough rinsing cannot be overemphasized. Detergents or disinfectants that dry on face pieces may result in dermatitis. In addition, some disinfectants may cause deterioration of rubber or corrosion of metal parts if not completely removed.
F. Components should be hand-dried with a clean lint-free cloth or air-dried.
G. Reassemble face piece, replacing filters, cartridges, and canisters where necessary.
H. Test the respirator to ensure that all components work properly.

Respiratory Protection Program

Attachment V – Table 2: Acceptable Fit-Testing Methods

	QLFT	*QNFT*
Half-Face, Negative Pressure, APR (<100 fit factor)	Yes	Yes
Full-Face, Negative Pressure, APR (<10 fit factor) Used in atmospheres up to 10 times the PEL	Yes	Yes
Full-Face, Negative Pressure, APR (>100 fit factor)	No	Yes
PAPR	Yes	Yes
Supplied-Air Respirators (SAR), or SCBA used in Negative Pressure (Demand Mode) (>100 fit factor)	No	Yes
Supplied-Air Respirators (SAR), or SCBA used in Positive Pressure (Pressure Demand Mode)	Yes	Yes

RF Energy Safety Program

Purpose:

The purpose of this program is to specify the maximum allowable levels of exposure to Radio Frequency (RF) fields with ranges between 10 MHz and 100 GHz. It further establishes guidelines for individual activities while working in the presence of RF Energy.

Maximum Exposure Limits:

Basic exposure levels are based upon the specific absorption rate, (SAR). This is defined as the rate at which the human body absorbs RF energy expressed per unit mass of the body. RF energy absorption can be through either direct induction of an electromagnetic field or through contact with energized metallic objects. The Occupational Safety and Health Administration (OSHA) in the standard on nonionizing radiation 29 CFR 1910.97 have determined maximum limits for both “partial body irradiation” and “whole body irradiation”. “Partial body irradiation” pertains to a portion of the body being exposed to incident electromagnetic energy, and “whole body irradiation” pertains to the whole body being exposed to incident electromagnetic energy.

OSHA has determined that for both partial and whole body exposures relative to electromagnetic fields of 10 MHz through 100 GHz under normal environmental conditions, the maximum level to be: 10 mW/cm2 (milliwatt per square centimeter) over a 0.1-hour period.

Exposure Monitoring:

An RF survey to determine potential employee exposures shall be performed on the site by a competent person. This survey should be done as frequently as possible to document areas of potential employee exposure. Any individual working on any site whose duties bring them within 10 feet of an antenna shall wear a personal monitoring device to determine potential exposure. If the maximum exposure level is approached, they are to leave the area immediately until a determination is made that they can work safely in the area.

General Requirements:

Every Company individual working on a site will have RF awareness training and understand the use of personal monitoring systems. Training will occur upon initial assignment and annually.

Only Company authorized individuals will be allowed on work sites.

Signage that meets the requirements of ANSI Z53.1 as referenced in OSHA 29 CFR 1910.97 will be posted prominently at controlled environment sites.

Assume all antennas to be active and emitting RF energy. Only specially trained individuals shall install or repair any component parts. All locations will be fenced off to prevent the general public from potential RF exposures. Any protective devices such as shields must be installed prior to testing any new or repaired equipment that may emit RF energy.

Additional metallic objects not necessary for the operation of the site should be removed to prevent inadvertent contact with energized metals.

Electro-explosive Devices:

Care shall be taken to ensure that electro-explosive devices are not placed in FR fields of a level sufficient to cause serious risks. Firing circuitry along with the wires of electric blasting caps may, under certain circumstances, pick up sufficient energy from RF fields to cause caps to explode. The susceptibility of the blasting caps to RF fields depends on the frequency, polarization and the strength of the field and various factors in the design of the detonator – including to what extent it is electrically screened from radio interference. The level of field intensity that may prove hazardous depends on its frequency: the lower the frequency, the more susceptible are the detonators.

Safety Procedures for Operators and Maintenance Personnel of RF Devices (RF Workers):

1. All affected employees and RF workers will wear RF monitors to notify any personnel in a given area that RF levels are approaching or exceeding FCC limits.

2. Maintenance personnel and operators of RF devices shall be aware of the potential hazards of RF fields and adhere to the procedures outlined in this program.

3. Particular care shall be taken to ensure that all people are clear of any direct beam of a RF device before it is switched on for test or maintenance purposes.

4. Instructions and procedures for repair, maintenance and operation of a device, as specified by the manufacturer or a competent person, shall be readily available to, and be followed by, operators and maintenance personnel.

5. Replacement components shall be equivalent to original components. Transmission lines, waveguides, gaskets, flanges and similar components shall have the same operating characteristics as the original components or be approved by the manufacturer of the original equipment, or a person trained in the safe use of this equipment.

6. Testing of a device either before or after completion of any repair work shall be carried out after protective shields, waveguides and other components have been replaced in their designated locations.

7. The correct operation of electronic test equipment and power meters shall be checked in advance, i.e., prior to using them at the repair station or test site.

8. Adjustment of voltages, replacement of RF energy generating components, dismantling components or refitting transmission lines shall be undertaken by persons specially trained for such assignments. The services of a qualified repair person shall be sought when any malfunction is suspected.

9. The correct operation of all safety interlocks shall be tested and operators shall not defeat any safety interlock.

10. A RF generating component shall be tested with an appropriate load connected to its output or with the radiated energy absorbed by anechoic material. The energy generated shall not be allowed to radiate freely into occupied areas.

RF Surveys:

RF Survey Procedures – The objective of a survey is to determine whether the device or installation complies with recommended standards of performance and personnel exposure, and to assess the effect of the location of the device with respect to controlled and uncontrolled areas in the environment. The following recommendations are made with respect to RF surveys:

1. Company Competent persons shall carry out RF surveys

2. Before routine operations begin, a RF survey shall be conducted for all new installations capable of producing levels exceeding those specified.

3. A survey shall be made following any repairs, increases in radiated power or changes in working conditions, protective shielding and barriers that may increase the levels, to ensure that the levels do not exceed the limits specified. This refers both to RF and microwave exposed workers and the general public.

4. A survey shall be conducted when any malfunction that may increase the field levels, induced body currents or contact currents is suspected.

5. A survey shall be conducted as frequently as practically possible around devices and at installations which are capable of producing fields, induced body currents or contact currents in excess of specified limits.

6. Survey instruments shall be selected to match the RF source & exposure conditions such as frequency, level of field strength or power density, near- or far- field. Survey instruments shall be fully calibrated at least once every three years. Their performance shall be checked against another calibrated instrument before carrying out a survey.

7. During a survey, a complete record of the field parameters (electric field strength, magnetic field strength or power density and induced body and contact currents) at each work site shall be kept to assist in making a realistic evaluation of compliance.

8. During the inspection of any RF device or installation, all safety interlocks and "ON- OFF" control switches shall be examined and placed in working order. The required warning signs, labels & tags must be readable and properly affixed to the device.

9. Medical surveillance will be addressed as necessary for reporting RF injuries and follow-up medical examinations to determine the extent of exposure.

Records and Recommendations:

(a) Records shall be kept of all RF survey measurements and their evaluation. The records shall include the date the measurements were made, number and type of devices in the area surveyed, the locations of measurement with respect to the RF emitting device, names and organization of who conducted the survey, survey results, as well as the model, serial number and calibration date of the measuring instrument(s) used. Other information that may prove useful would be photographs, floor plans, etc.

(b) Recommendations on appropriate changes in shielding, location and operation of the device, based on the evaluation of the survey measurements, shall be made to the person(s) responsible for the device. When a remedial action based on these recommendations has been taken, another survey shall be made to verify the effectiveness of the actions.

Warning Signs:

Recommended Warning Signs- There are three warning signs suggested for RF Field awareness. These signs or reasonable alternatives shall be used. The suggested signs are designed to indicate the nature and degree of hazard associated with a given device or location. The nature of the hazard is indicated by the symbol, and degree of hazard is indicated by the shape and color of the sign. The warning signs and their meaning should be posted as required. The size of the sign shall be appropriate to the conditions of use, such that it is clearly distinguishable, being either illuminated or employing reflective materials as necessary.

Signage that meets the requirements of ANSI Z53.1 as referenced in OSHA 29 CFR 1910.97 will be posted prominently at controlled environment sites.

Definitions:

Antenna - A device for radiating or receiving radio frequency (RF) energy.

Antenna Gain - The increase in power transmitted or received by a directional antenna when compared to a standard antenna, which is usually an ideal isotropic antenna. Gain is a ratio of powers and may be expressed in decibels (dB) or as a pure number.

Auditory Effect - Human perception to individual pulses from RF fields in the form of audible clicks, chirping or buzzing sounds, depending on the pulsing regime and intensity of the field.

Cavity - The interior of a metal structure that encloses or confines a radio frequency field.

Computerized Tomography - A diagnostic-imaging procedure in which anatomical information is digitally reconstructed from x-radiation transmission data obtained by scanning an anatomical area from many directions.

Competent Person - An individual who because of his/her knowledge, training and experience is qualified to carry out RF and microwave surveys and/or repair and maintain RF and microwave devices.

Contact Current - Current flowing between an energized, isolated, conductive (metal) object and ground through an electrical circuit representing the equivalent impedance of the human body.

Continuous Wave (CW) - Successive oscillations that are identical under steady state conditions (an unmodulated electromagnetic wave).

Denied Access Area - An area not to be accessed by any person.
Duty Factor - The ratio of the pulse duration to the pulse period (i.e., time lapse between the start of consecutive pulses) of a periodic pulse train. Mathematically, the duty factor is the product of the pulse duration multiplied by the pulse repetition frequency.

Effective Isotropically Radiated Power (EIRP) - This term applies to directional antennas. The power that would have to be transmitted by an isotropic antenna to produce the same power density at any given point along the directional antenna's axis. Mathematically, EIRP is the gain of a transmitting antenna multiplied by the net power delivered to the antenna from the connected transmitter.

Electric Field - The region surrounding an electric charge, in which the magnitude and direction of the force on a hypothetical test charge, is defined at any point.

Electrical Ground - The earth or a metal surface placed in contact with the earth, or connected to the earth with a conductor.

Electromagnetic Interference - Degradation of the performance of a device, a piece of equipment, or a system caused by an electromagnetic disturbance.

Electromagnetic Radiation - The propagation of time-varying electric and magnetic fields through space at the velocity of light.

Extremities - Limbs of the body, including upper arms and thighs.

Far-Field Zone - The space beyond an imaginary boundary around an antenna. The boundary marks the beginning where the angular field distribution is essentially independent of the distance from the antenna. In this zone, the field has a predominantly plane wave character.

Field Strength - The magnitude of the electric or magnetic field, normally a root-mean square value.

Frequency - The number of sinusoidal cycles made by electromagnetic waves in one second; usually expressed in units of hertz (Hz).

General Public - All persons not employed as RF and microwave exposed workers or those not working in controlled environments (areas). They include pregnant women, the aged, children, the chronically ill and disabled.

Induced Current - Current induced in a human body exposed to RF fields.

Interlock - A component or set of components that, when actuated, prevents the generation of power from a RF and microwave source, such as the magnetron in a microwave oven or a RF transmitter.

Leakage Radiation - Any unintended or accidental radiation emitted by a device outside its external surface.

Magnetic Field - A region of space surrounding a moving charge (e.g., in a conductor) being defined at any point by the force that would be experienced by another hypothetical moving charge. A magnetic field exerts a force on charged particles only if they are in motion, and charged particles produce magnetic fields only when they are in motion.

Magnetic Resonance Imaging - A technique for obtaining images of the internal anatomy based on the use of nuclear magnetic resonance (NMR) signals. The NMR method is based on partially aligning the nuclear spins by use of strong, static magnetic field, stimulating these spins with an RF field oscillating at the precession frequency of nuclear magnetic moments, and detecting the signal that is induced at this frequency.

Microwave - A radio wave that has a frequency of between 1 GHz and 300 GHz or a wavelength of between 30 cm and 1 mm.

Modulated Wave (radiation) - An electromagnetic wave that is modified by pulsing, or by varying its amplitude, frequency or phase. Such a wave is called, respectively, pulse-, amplitude-frequency-, or phase-modulated.

Near-Field Zone - A volume of space generally close to an antenna or other radiating structure, in which the electric and magnetic fields do not have a substantially plane-wave character, but vary considerably from point to point. The near-field zone is further subdivided into the reactive near-field region and the radiating near-field region.

Occupationally Exposed Persons - Workers who are exposed to RF fields and microwaves in the course of their regular employment.

Organ-averaged SAR for the eye - Specific Absorption Rate (SAR) averaged throughout the whole eyeball.

Owner - A person, organization or institution having title to, or, an administrative control over a given RF emitting device.

Plane Wave Character - Nature of the angular field distribution in the far-field region of a source antenna, in which the electric field vector is perpendicular to the magnetic field vector, and they are both perpendicular to the direction of propagation.

Power Density - The rate of flow of electromagnetic energy per unit surface area usually expressed in W/m 2 or mW/cm 2 or µW/cm 2.

Portable Transmitter - A mobile device that radiates electromagnetic waves for the purpose of communication, examples of which are cellular telephones and walkie-talkies.

Radio frequency - The frequency in the portion of the electromagnetic spectrum that is between 3 kHz and 300 GHz.

Radiation (electromagnetic) - The emission or transfer of energy through space in the form of electromagnetic waves.

Radiating Near-Field Region - The region between the reactive near-field and the far-field wherein the radiation field dominates the reactive field, but lacks substantial plane-wave character.

Reactive Near-Field Region - The region that is closest to an antenna or other radiating structure and contains most or nearly all of the stored energy.

Responsible User - A person who is authorized to operate an RF device properly and safely with respect to RF radiation.

Restricted Occupancy - An area where access is restricted to RF and microwave exposed workers for a prescribed time duration.

RF Device - A device which generates and/or utilizes RF energy.

RF Survey - An evaluation of the actual or potential RF field levels in any area, specifically in the vicinity of RF devices, and an evaluation of induced and contact currents.

RF Worker - An employee or a person (including a pregnant woman) who because of his/her knowledge, training and experience with RF devices is qualified to work with these devices properly and safely with respect to RF exposure.

RF and Microwave Exposed Workers - Persons who are exposed to RF fields and microwaves in the course of their daily work (e.g., those who may work near an RF device but may not be RF workers).

rms - Root mean square. Mathematically, it is the square root of the average of the square of the instantaneous field or current taken throughout one period.

Safety - The absence of detrimental health effects from RF exposures.

Safety Officer - A person who is appointed to ensure safety of working within an RF environment.

Specific Absorption Rate (SAR) - The rate of radio frequency energy absorbed in tissue per unit mass. Quantitatively, it is the time derivative (rate) of the incremental energy (dW) absorbed by an incremental mass (dm) contained in a volume element (dV) of given mass density.

Transceiver - A combination of transmitter and receiver in a single housing, with some components being used by both parts.

Uncontrolled Area - Any area that is neither a Restricted Occupancy Area, nor a Denied Access Area.

Visible Warning Indicator - A display such as flashing lights and signs to warn people of the fact that the power of an RF device is on.

Wavelength - The distance traveled by a propagating wave in one cycle of oscillation.

Radiation - Electromagnetic radiation having a wavelength in the range of 0.0001 to less than 1 nm.

Rigging Safety

Hoisting and Rigging Safety Program

A thorough annual inspection of the hoisting machinery shall be made by a competent person, or by a government or private agency recognized by the U.S. Department of Labor. PNT Consulting LLC shall maintain a record of the dates and results of inspections and rated load tests for each hoisting machine and piece of equipment.

Any defects found will be repaired by a qualified person before the crane is used. Before a crane is placed in service for use, rope components shall be inspected by a qualified person for defects, damage and deformities and at least monthly thereafter. Certification of this inspection shall be in writing and document the date of inspection; inspector's name and signature; and identification number of the rope component inspected.

Inspection of wire rope

Wire rope shall be taken out of service when any of the following conditions exist:

- In running ropes, 6 randomly distributed broken wires in 1 lay or 3 broken wires in one strand in one lay;
- Wear of 1/3 the original diameter of outside individual wires.
- Kinking, crushing, bird caging, or any other damage resulting in distortion of the rope structure;
- Evidence of any heat damage from any cause;
- Reductions from nominal diameter of more than 1/64 inch for diameters up to and including 5/16 inch, 1/32 inch for diameters 3/8 inch to and including 1/2 inch, 3/64 inch for diameters 9/16 inch to and including 3/4 inch, 1/16 inch for diameters 7/8 inch to 1 1/8 inches inclusive, 3/32 inch for diameters 1 1/4 to 1 1/2 inches inclusive;
- In standing ropes, more than 2 broken wires in 1 lay in sections beyond end connections or more than 1 broken wire at an end connection.
- Wire rope safety factors shall be in accordance with American National Standards Institute B 30.5-1968 or SAE J959-1966.

Heavy wear and/or broken wires may occur in sections that have contact with equalizer sheaves or other sheaves (where rope travel is limited) or with saddles. Particular care shall be taken to inspect ropes at these locations.

If rope has not been used for a month or longer (i.e. due to shut down or storage of a crane on which it is installed) this rope shall be given a thorough inspection before it is used.

This inspection shall be made by a designated person who is authorized by the Company.

This inspector shall examine rope for any kind of damage, deterioration or defect that might compromise the safety and specifications of the rope. Specific attention and care shall be given to the inspection of non-rotating rope.

Only this designated and authorized inspector shall give approval for use of this rope following satisfactory safety inspection as described above.

A written record of the inspector's certification shall be maintained by the Safety Coordinator in a file and be readily available for review and confirmation. This certification shall include the inspection date, name and signature of the inspector, and the identification number of the rope component that was inspected.

Inspection of hoist chains

Hoist chains and end connections shall be inspected daily for damage, deterioration, excessive wear, twist, distorted links interfering with proper function, or stretch beyond manufacturer's recommendations.

Chains shall be inspected visually by the operator each day or before first use.

Chains also shall be inspected monthly for safety certification. The written certification shall include the date of inspection, name and signature of the inspector, and the identification number of the chain that was inspected. Written certification records shall be maintained by the Safety Coordinator in a file.

Inspection of hooks and hook components

Crane hooks and safety latches shall be visually inspected each day or at the beginning of a shift prior to use for damage, cracks or deformation.

Hooks and safety latches also shall be inspected monthly for safety certification. The written certification shall include the date of inspection, name and signature of the inspector, and the identification number of the hook that was inspected. Written certification records shall be maintained by the Safety Coordinator in a file.

Hooks that have cracks or a throat opening that is greater than 15 percent in excess of normal or more than 10 degree twist from the plane of the unbent hook shall be discarded.

Preventive maintenance

The Company has implemented a preventive maintenance program to help ensure the safety of cranes, hoists, rigging and related equipment. Preventive maintenance shall be performed in accordance with manufacturer's recommendations. Each crane shall have a written record of preventive maintenance that is maintained by the Safety Coordinator.

Type of Inspection	*Who?*
Modified or repaired/adjusted	*Qualified person*
Post-assembly	*Qualified person*
Shift	*Competent person*
Monthly	*Competent person*
Annual	*Qualified person*

-

<u>Qualified Riggers</u>

All riggers PNT Consulting LLC will be qualified person for the performance of specified hoisting activities

such as during assembly/disassembly work and those that require employees to be in the fall zone to handle a load. The rigger would be considered qualified through possession of a recognized degree, certificate, or professional standing; or by extensive knowledge, training, and experience, successfully demonstrating the ability to solve/resolve problems related to rigging work and related activities.

Signal Persons:

- *Qualification Requirements:*
  - *Know & understand signals*
  - *Competent in using signals*
  - *Basic understanding of crane operation*
  - *Verbal or written test plus practical test*

Qualified How	*Documentation*	*Portable*
Third party qualified evaluator	*Yes*	*Yes*
Employer qualified evaluator	*Yes*	*No*

PNT Consulting LLC

Scaffolding

Purpose

It is the Company's purpose in issuing these procedures to further ensure a safe workplace based on the following formal, written procedures for scaffold work. These procedures should be reviewed and updated as needed to comply with new regulations, new best practices in scaffolding, and as business practices demands.

Application

This general scaffold plan applies to:

- All employees who perform work while on a scaffold.
- All employees who are involved in erecting, disassembling, moving, operating, repairing, maintaining, or inspecting scaffolds.

General Procedures

Capacity

- Each scaffold and scaffold component we use will support, without failure, its own weight and at least four times the maximum intended load applied or transmitted to it.
- When we use non-adjustable suspension scaffolds, each suspension rope, including connecting hardware, will support, without failure, at least six times the maximum intended load applied or transmitted to that rope.
- Direct connections to roofs and floors, and counterweights used to balance adjustable suspension scaffolds, shall be capable of resisting at least 4 times the tipping moment imposed by the scaffold operating at the rated load of the hoist, or 1.5 (minimum) times the tipping moment imposed by the scaffold operating at the stall load of the hoist, whichever is greater.
- Each suspension rope, including connecting hardware, used on non-adjustable suspension scaffolds shall be capable of supporting, without failure, at least 6 times the maximum intended load applied or transmitted to that rope.
- The stall load of any scaffold hoist shall not exceed 3 times its rated load.

Scaffolds shall be designed by a qualified person and shall be constructed and loaded in accordance with that design.

Platform Construction

Scaffolding

Platform – Decks

- Use wooden and metal decks according to job requirements, standards, regulations and manufacturer's instructions.
- Only cleat planks at the ends to prevent lengthwise movement. Wiring down planks can also prevent movement, provided wire does not create a tripping hazard. Where planks overlap, rest the cleated end on the support. Do not use cleats elsewhere on the plank to prevent splitting.
- Ensure that adjoining planks are of uniform thickness for an even platform.
- Lay planks side by side across the full width of the scaffold.
- Check scaffold planks for large knots, worm holes, steeply sloping grain at the edges, spike knots, and splits. Splits wider than 10 mm (3/8 in), lengthwise closer than 75 mm (3 in.) to the edge of the plank, or lengthwise longer than ½ the length of the plank are not acceptable. Discard immediately any planks showing these or other defects.
- Check hooks and hardware of prefabricated platform units regularly for looseness, distortion and cracks. Damage can occur if the platforms are dropped or thrown.
- Clean ice, snow, oil and grease off planks. Platform decks should be slip-resistant and should not accumulate water.
- Inspect planks on a regular basis while on the scaffold. Weather, rot, and general use can deteriorate the planks.
- Do not jump on the planks to test their strength. Jumping can cause undetectable damage.
- Ensure that all working platforms are about 500 mm (20 in.) minimum in width.
- Use a minimum of 50 mm (2 in.) x 250 mm (10 in.) Number 1 Grade spruce-pine-fir (SPF) planking or better.
- Overlap or extend planking 150 mm (6 in.) to 300 mm (12 in.) and cleat at each end to prevent planking from slipping and blowing off.
- Support planks at intervals not exceeding 3m (10 ft) for light work and 2.1 m (7 ft.) for heavy work (bricklaying, masonry).
- Check with officials in your local jurisdiction as recommendations may vary.
- Stack planks on a firm level surface to prevent warping.
- Band the ends of the boards. Do not paint as the paint can conceal defects.
- Do not use scaffold planks as a base to stack materials, or as ramps or temporary roadways.

Scaffolding

Supported Scaffolds

- Refer to safety regulations and standards for design and assembly requirements.
- Choose the right scaffold system for the job.
- Erect all scaffold parts according to the manufacturer's instructions.
- Select scaffold according to:
    - height required
    - type and duration of work
    - range of weather conditions
    - weight of workers, materials and equipment
    - location
    - requirements for pedestrian traffic
- Erect scaffold on a base that will support all the loads that will be applied including materials and equipment.
- Make sure the backfill is compact and level. Replace mud and soft soil with gravel or crushed stone.
- Provide adequate sills for scaffold posts and use base plates.
- Set scaffold feet centrally on mudsills consisting of 50x250 mm (2x10 in.) planks. Sills should extend at least 610 mm (2 ft.) beyond the scaffold base and be long enough to extend under at least two scaffold feet.
- Install scaffold with jackscrews (adjusting screws). They allow for minor adjustments to help keep scaffold plumb and level.
- Take extra precautions when erecting scaffold on frozen ground. Thawing soil can become water-soaked and lose its ability to bear weight.
- Brace both sides of every frame for the vertical plane. Install horizontal bracing at the joint of every third tier of frames. This bracing is often attached to the point where the scaffold is tied to the structure.
- Do not force braces to fit. Level the scaffold until a proper fit can be made easily.
- Use coupling devices to join frames to prevent the joints from pulling apart.
- Do not use nails or other devices in the place of proper retention parts as recommended by the manufacturer.
- Tie or brace the scaffold to a solid structure as appropriate.
- Use a debris net, catch platform or similar structure where appropriate to catch falling objects.
- Do not allow the ratio of scaffold height to base width to exceed 3 to 1 unless the scaffold is:
    - tied into a structure
    - stabilized by guy wires

Scaffolding

- secured by outriggers or stabilizers to maintain the ratio

Suspension Scaffolds

- Ensure that platform is installed and maintained according to job requirements, safety regulations, standards and the manufacturer's specifications.
- Inspect all equipment before erecting and before each shift.
- Use a separate safety harness attached to an independent life line for each worker. Maintain lanyard attachment at highest point possible.
- Ensure that suspended platform roof beams and attachments are secure.
- Ensure that the roof or parapet wall is structurally sound to support either outriggers or cornice hooks.
- Check for kinked or damaged ropes.
- Secure all ropes at anchor ends.
- Ensure that all safety equipment, stops, override switches and brakes function properly.
- Prevent contact between welding or grinding equipment and wire safety or suspension ropes.
- Secure hand tools to the platform.
- Ensure that power source is secured and properly grounded.
- Secure platform when not in use.
- Ensure that guardrails and toe boards are in place.
- Extend suspension ropes completely to the ground or terminate with wire rope clips to prevent the stage from running off the end of the ropes.
- Test by raising the fully loaded platform a few feet off the ground before going aloft.
- Do not exceed platform load capacity.
- Do not enter or leave the platform other than at ground level or at other safe access points.
- Do not allow electric cables or connections to lie in gutters or other areas where water can collect.
- Do not work near exposed electrical circuits or equipment.
- Do not join platforms unless they are designed for this purpose.
- Do not use damaged or defective equipment.
- Do not alter, substitute or remove components of platform.
- Do not use life line for raising or lowering tools or materials.
- Do not move work platform unless all workers on it are protected by individual safety belts and lines.

Rolling Scaffold

- Assemble the rolling scaffold according to manufacturer's instructions.

Scaffolding

- Ensure that the surface on which the scaffold is moved is level and without holes or obstructions.
- Brace all rolling scaffolds horizontally and diagonally.
- Cleat or secure all planks.
- Prevent joints from separating.
- Secure access ladders.
- Make sure the platform has appropriate guardrails (hand, mid, toe).
- Ensure that each wheel or castor is equipped with brakes to prevent rolling and swiveling.
- Lock the caster brakes before climbing onto scaffold.
- Secure or remove all material, equipment and personnel from platform before moving it.
- Push towards the base when moving.
- Use the built-in access ladders to reach the platform.
- Refer to safety regulations for height stability requirements.
- Do not stay on the scaffold when it is being moved. If a worker must remain on the scaffold, make sure the worker is secured to the building (not the scaffold) with appropriate safety harness and lanyard.
- Do not try to move a rolling scaffold without enough help. Watch out for slopes, holes, debris, and overhead obstructions.
- Do not extend adjusting screws more than the manufacturer recommends.
- Do not allow the working platform height to exceed three times the base width, unless it is guyed and equipped with outriggers or otherwise stabilized.
- Do not use powered devices to move scaffolds.
- Do not lean access ladders against rolling scaffolds.
- Do not over-reach from the scaffold.
- Do not climb using the frame.

Fall Protection Plan

Fall protection planning is critical to the safety and well being of our employees. Our fall protection plan follows certain requirements that are different depending on the type of scaffold we are using. In this plan we address fall protection for our scaffold erectors and dismantlers separately. One fact never changes. We know we must provide fall protection for any employee on a scaffold more than 10 feet above a lower level.

Working Employees

This fall protection plan for our working employees is for the following type(s) of scaffold(s):

Scaffolding

- Single- or two-point adjustable suspension scaffold-We will protect each employee on our single- or two-point adjustable suspension scaffolds by a personal fall arrest system. Our personal fall arrest systems:
    - Meet the requirements of your local jurisdiction
    - Are attached by lanyard to a vertical lifeline, horizontal lifeline, or scaffold structural member.

NOTE: Vertical lifelines shall not be used when overhead components, such as overhead protection or additional platform levels, are part of a single-point or two-point adjustable suspension scaffold.

When vertical lifelines are used, they shall be fastened to a fixed safe point of anchorage, shall be independent of the scaffold, and shall be protected from sharp edges and abrasion. Safe points of anchorage include structural members of buildings, but do not include standpipes, vents, other piping systems, electrical conduit, outrigger beams, or counterweights.

When horizontal lifelines are used, they shall be secured to two or more structural members of the scaffold, or they may be looped around both suspension and independent suspension lines (on scaffolds so equipped) above the hoist and brake attached to the end of the scaffold. Horizontal lifelines shall not be attached only to the suspension ropes.

When lanyards are connected to horizontal lifelines or structural members on a single-point or two-point adjustable suspension scaffold, the scaffold shall be equipped with additional independent support lines and automatic locking devices capable of stopping the fall of the scaffold in the event one or both of the suspension ropes fail. The independent support lines shall be equal in number and strength to the suspension ropes.

Vertical lifelines, independent support lines, and suspension ropes shall not be attached to each other, nor shall they be attached to or use the same point of anchorage, nor shall they be attached to the same point on the scaffold or personal fall arrest system.

Using Scaffolds

Site preparation, scaffold erection, fall protection, and gaining access to the working platform are only some of the requirements for scaffold work. While this all takes concentration and safe work practices, the most dangerous time can be when employees are concentrating on their work and not particularly aware of the hazards of working from scaffolds. It is critical that employees who use scaffolds be trained, among other things, in the recognition of the hazards associated with the type of scaffold being used and to understand the procedures to control or minimize those hazards. Our competent person will inspect all scaffolds and scaffold components for visible defects before each work shift, and after any occurrence that could affect a scaffold's

structural integrity. However, in addition to that, all users of scaffolds in this company will know and understand the following safety rules:

- Scaffolds and scaffold components will never be loaded in excess of their maximum intended loads or rated capacities.
- Debris must not be allowed to accumulate on platforms.
- Scaffolds and scaffold components shall be inspected for visible defects by a competent person before each work shift, and after any occurrence which could affect a scaffold's structural integrity.
- Any part of a scaffold damaged or weakened such that its strength is less than that required by paragraph (a) of this section shall be immediately tagged out, repaired or replaced, braced to meet those provisions, or removed from service until repaired. An example of tag used in tagging out scaffolding equipment is provided at the back of this program.
- Scaffolds shall not be moved horizontally while employees are on them, unless they have been designed by a registered professional engineer specifically for such movement or, for mobile scaffolds.
- The clearance between scaffolds and power lines shall be as follows: Scaffolds shall not be erected, used, dismantled, altered, or moved such that they or any conductive material handled on them might come closer to exposed and energized power lines.
- Scaffolds shall be erected, moved, dismantled, or altered only under the supervision and direction of a competent person qualified in scaffold erection, moving, dismantling or alteration. Such activities shall be performed only by experienced and trained employees selected for such work by the competent person.
- Employees shall be prohibited from working on scaffolds covered with snow, ice, or other slippery material except as necessary for removal of such materials.
- Where swinging loads are being hoisted onto or near scaffolds such that the loads might contact the scaffold, tag lines or equivalent measures to control the loads shall be used.
- Suspension ropes supporting adjustable suspension scaffolds shall be of a diameter large enough to provide sufficient surface area for the functioning of brake and hoist mechanisms.
- Suspension ropes shall be shielded from heat-producing processes. When acids or other corrosive substances are used on a scaffold, the ropes shall be shielded, treated to protect

against the corrosive substances, or shall be of a material that will not be damaged by the substance being used.

- Work on or from scaffolds is prohibited during storms or high winds unless a competent person has determined that it is safe for employees to be on the scaffold and those employees are protected by a personal fall arrest system or wind screens. Wind screens shall not be used unless the scaffold is secured against the anticipated wind forces imposed.
- Debris shall not be allowed to accumulate on platforms.
- Makeshift devices, such as but not limited to boxes and barrels, shall not be used on top of scaffold platforms to increase the working level height of employees.
- Ladders shall not be used on scaffolds to increase the working level height of employees, except on large area scaffolds where employers have satisfied the following criteria:
    - When the ladder is placed against a structure which is not a part of the scaffold, the scaffold shall be secured against the sideways thrust exerted by the ladder;
    - The platform units shall be secured to the scaffold to prevent their movement;
    - The ladder legs shall be on the same platform or other means shall be provided to stabilize the ladder against unequal platform deflection, and
    - The ladder legs shall be secured to prevent them from slipping or being pushed off the platform.
- Platforms shall not deflect more than 1/60 of the span when loaded.
- To reduce the possibility of welding current arcing through the suspension wire rope when performing welding from suspended scaffolds, the following precautions shall be taken, as applicable:
- An insulated thimble shall be used to attach each suspension wire rope to its hanging support (such as cornice hook or outrigger). Excess suspension wire rope and any additional independent lines from grounding shall be insulated;
- The suspension wire rope shall be covered with insulating material extending at least 4 feet (1.2 m) above the hoist. If there is a tail line below the hoist, it shall be insulated to prevent contact with the platform. The portion of the tail line that hangs free below the scaffold shall be guided or retained, or both, so that it does not become grounded;

Scaffolding

- Each hoist shall be covered with insulated protective covers;
- In addition to a work lead attachment required by the welding process, a grounding conductor shall be connected from the scaffold to the structure. The size of this conductor shall be at least the size of the welding process work lead, and this conductor shall not be in series with the welding process or the work piece;
- If the scaffold grounding lead is disconnected at any time, the welding machine shall be shut off; and
- An active welding rod or uninsulated welding lead shall not be allowed to contact the scaffold or its suspension system.

Prohibited Practices

The following practices will never be tolerated in this company:

- Scaffold components manufactured by different manufacturers will never be intermixed unless the components fit together without force and the scaffold's structural integrity is maintained.
- Unstable objects will never be used to support scaffolds or platform units. Footings must be level, sound, rigid, and capable of supporting the loaded scaffold without settling or displacement.
- Crossbraces will never be used as a means of access.

Duties of Competent and Qualified Persons

Only qualified and competent personnel are allowed to modify scaffolding systems. Non-qualified personnel may create more hazards. If modifications are attempted by non-qualified personnel they will be subject to disciplinary action up to and including termination of employment.

Scaffolding

Tagging

Tags must be placed at each point of entry to the scaffold. This includes access points from ground level and any access points from the structure with which the scaffold is being used.

Doing so ensures that workers are aware of the status and condition of the scaffold, regardless of where they access it. Whatever their colour, tags must include:

(a) the duty rating of the scaffold,
(b) the date on which the scaffold was last inspected,
(c) the name of the competent worker who inspected the scaffold,
(d) any precautions to be taken while working on the scaffold, and
(e) the expiry date of the tag.

Scaffolds must be inspected prior to initial use and at least every 21 calendar days thereafter while workers work from the scaffold or materials are stored on it. A scaffold that is erected but not immediately put into service, or not used for more than 21 consecutive calendar days, must be tagged with a red tag until inspected by a competent worker. A scaffold sitting idle may be exposed to weather or other circumstances that could make it unsafe for use. Inspection, just prior to the scaffold being put into service, confirms that it is safe for workers to use.

The tags let workers know that a particular scaffold is safe for use, that a potential or unusual hazard is present, or the scaffold is unsafe for use. The yellow tag is required to describe any precautions to be taken while working on the scaffold. A scaffold being modified on a particular level requires a yellow tag. The tag alerts workers climbing onto the scaffold of the modification work and any special precautions that might affect them.

Colour of Inspection Tag	Wording to Appear on Tag
Green	“Safe for Use” or similar wording
Yellow	“Caution: Potential or Unusual Hazard” or similar wording
Red	“Unsafe for Use” or similar wording

Scaffolding

Training

Recognizing the need for training for employees who: (1) perform work while on scaffolds, (2) are involved in erecting, disassembling, moving, operating, repairing, maintaining, or inspecting scaffolds, and (3) have lost the requisite proficiency, training is one of the highest priority of this program.

Employees Who Use Scaffolds

Our employees who perform work on scaffolds will be trained by a qualified person to recognize the hazards associated with the type of scaffold being used and to understand the procedures to control or minimize those hazards. The training will include the following areas as applicable:

- The nature of and the correct procedures for dealing with electrical hazards.
- The nature of and the correct procedures for erecting, maintaining, and disassembling the fall protection and falling object protection systems used.
- The proper use of the scaffold, and the proper handling of materials on the scaffold.
- The maximum intended load and the load-carrying capacities of the scaffolds used.
- Tagging of scaffolds.
- Any other pertinent requirements of the local standards and regulations.

Employees Who Erect, Disassemble, Move, Operate, Repair, Maintain, or Inspect Scaffolds

Our employees who erect, disassemble, move, operate, repair, maintain, or inspect scaffolds will be trained by our competent person to recognize the hazards associated with the work being done. The training will include the following toAVETTA as applicable:

- The nature of scaffold hazards.
- The correct procedures for erecting, disassembling, moving, operating, repairing, inspecting, and maintaining the type of scaffold in question.
- The design criteria, maximum intended load-carrying capacity, and intended use of the scaffold.
- Tagging of scaffolds.

Scaffolding

- Any other pertinent requirements of this subpart.

Employees Who Need Retraining

When we have reason to believe that one of our employees lacks the skill or understanding needed for safe work involving the erection, use or dismantling of scaffolds, we will retrain the employee so that the requisite proficiency is regained. Retraining will be done in at least the following situations:

- Where changes at the worksite present a hazard about which the employee has not been previously trained.
- Where changes in the types of scaffolds, fall protection, falling object protection, or other equipment present a hazard about which an employee has not been previously trained.
- Where inadequacies in an affected employee's work involving scaffolds indicate that the employee has not retained the requisite proficiency.

Silica Awareness

Purpose

Silica Awareness

You may not have realized it but silica is everywhere. In fact it's present in about 95% of rocks, clays, sands and soils! Hazardous exposure in the workplace can occur when crystalline silica found in sand, quartz, and granite becomes airborne as dust from activities such as:

Demolition of brick, concrete, or masonry. Chipping, hammering, grinding, sawing, and drilling in concrete, brick or rock. Abrasive blasting using sand or from the material being blasted such as concrete. Crushing loading, hauling, and dumping of concrete or rock. Dry sweeping concrete, sand or rock dust. Trenching and excavating.

Once crystalline silica dust is inhaled it can potentially result in silicosis. Silicosis is a debilitating respiratory illness which may take years of silica exposure to develop. It can go undetected for years and only a complete work history, chest X-ray, and a lung-function test will determine whether or not a worker has the disease. Symptoms include: shortness of breath, severe cough, fatigue, loss of appetite, chest pains, and fever. Silicosis can also make a worker susceptible to emphysema and tuberculosis.

ENGINEERING CONTROLS

Silicosis is not curable but it is preventable by: controlling dust by using dust-containment systems, ventilation, or wetting down materials; using PPE such as respirators and dust masks; practicing good personal hygiene by washing, showering, regularly changing into clean clothes; never eating, drinking or smoking in dusty areas.

Subcontractor Management

Policy

Subcontractors for Company Associates work sites shall be selected and managed in a manner consistent with the overall Company Associates safety objectives, policies, and procedures embodied in the other sections of this manual.

Purpose

To set forth a basis for the selection of safe subcontractors and to set forth procedures to assure that the subcontractor's safety activities are equal to or exceed those of Company Associates.

Scope

Applies to all Company Associates work sites, i.e. Company offices, client job sites, etc., that have occasion to use subcontractors.

Definitions

Experience Modification Rate (EMR) is a term related to Workers' Compensation insurance and means a factor developed by measuring the difference between an employer's actual past claim experience and the expected or actual experience of the industry classification of the employer. Depending on the workers compensation program in which the subcontractor participates, the EMR may be determined by a single state entity or a multi-state agency such as the National Council on Compensation Insurance (NCCI). The EMR is based on a point scale where 1.0 means average or expected losses for that type of industry classification. EMR's below 1.0 means below average loss history and EMR's above 1.0 mean above-average loss history.

Hours of Exposure means the total number of hours that all of a company's employees are exposed to occupational injuries or illnesses during a normal work year. Salaried and hourly employees are included. Straight-time and over-time hours are included.

Subcontractor for purposes of this section, means a person or business, which has a standard subcontract agreement with Company Associates, as an "independent contractor" (not an employee), to provide some portion of the fieldwork on a project for Company Associates.

Requirements

Subcontractor Selection

Form 5-1.1 of Appendix 5-1 is a Pre-Qualification Questionnaire that shall be used to capture the information noted within this section. It is required that safety performance be considered initially, and annually thereafter, in the selection of subcontractors, using the following criteria:

5.1.1 Experience Modification Rate ("EMR")

Prospective subcontractors shall be required to furnish their EMR for the past three years. This information should come directly from the subcontractor's broker. An EMR greater than 1.0 can indicate an employer with a high frequency and/or severity of workers compensation claims. In the event of an EMR greater than 1.0, a more detailed evaluation of their safety program is required by the Branch Safety Officer.

5.1.2 OSHA Log

Prospective subcontractors shall be required to submit copies of OSHA logs (or equivalent summary data) for the previous three years and applicable hours of exposure. Incident frequency and severity rates should be examined and compared for acceptability with:

- Comparable incident rates for relevant Company Associates work sites (if available)
- Industry average incident rates for their Standard
- Industrial Code (SIC or NAICS code) as published by the Bureau of Labor Statistics
- An incident rate specified by the Company Associates
- Branch Safety Officer or Regional Safety Coordinator

5.1.3 Evaluation of Subcontractor Safety Program

The prospective subcontractor shall demonstrate that his program meets or exceeds industry standards. The following areas are a minimum that shall be addressed by the subcontractor:

- The program should be industry specific, not generic, and should be responsive to the exposures prevalent in the industry and anticipated on the prospective project
- There should be elements of supervisor accountability for safety, accidents, and claim costs Safety meetings should be held regularly, with documentation as to the subject, who attended, and a review of past losses
- Safety audits (inspections) should be conducted by the subcontractor on a regular basis. Audit results should be documented to identify deficiencies and corrective action taken
- The program should provide for employee safety training, including the documentation thereof

5.1.4 OSHA Citations

The prospective subcontractor shall be required to provide information (reason, corrective action, and fines) regarding OSHA citations during the past three years. A history of frequent violations, infrequent but repeated violations, or violations applicable to the work to be performed would warrant further investigation.

5.2 Pre-Job Planning

The understanding of Company Associates and the subcontractor on important issues should be written and signed by both parties as part of the subcontract agreement and scope of work. Examples of such issues would be:

- Provision of tools and equipment and inspection thereof
- Performance in accordance with OSHA and other regulatory bodies
- Provision of all necessary PPE, training on its use, and enforcement of
- usage at the worksite
- Responsibility for housekeeping and debris removal efforts
- Responsibility for utility mark out, maintenance, and protection of traffic
- on underground and road projects during the project

5.3 Typical Actions Recommended During Performance of Work

Include subcontractors in the following safety activities:

- Manager Audits
- Safety Meetings
- Training Sessions
- Safety Audits
- Work Observations
- Job Safety Analysis Systems
- Injury Intervention Processes
- Root Cause Analysis
- Client-Required Programs

Subcontractor Management

PNT Consulting LLC

SUBCONTRACTOR PRE-QUALIFICATION QUESTIONNAIRE

All subcontractors are required to complete this questionnaire. The contents of this questionnaire will be considered confidential and used solely to determine your firm's qualifications, and will not be disclosed to the project staff. Please direct any questions, and return this completed form, to:

{Company name}
{Address}
Telephone: {Phone}
Fax No.: {Fax}

1. GENERAL INFORMATION. Please fill in the following:

1.1 Name of Business:_____
Street Address:_____
Post Office Address:_____
City, State, Zip Code:_____
1.2 Telephone Number _____ Fax Number:_____
1.3 Person to Contact:_____

2. ORGANIZATION. Please indicate your firm's legal structure:

2.1 This firm is a: ( ) C Corporation ( ) S Corporation ( ) Partnership
( ) Sole Proprietor ( ) Limited Liability Company

2.2 Federal Employer Identification Number:_____

2.3 Names, Titles and ages and length in position of Officers, Managers, or Principals:

Name	Title	Age	Time in Position

2.4 Is your firm a qualified minority business? _____ Certification No.:_____

3. WORK CLASSIFICATION

3.1 Please list the type(s) of work you are interested in bidding:

3.3 Please list the geographic areas you prefer to work in:

4. WORK EXPERIENCE

4.1 Please attach a list of the major projects your firm currently has in progress showing the project name, location, owner, architect/engineer, general contractor, contract amount, percent complete and scheduled completion date, and contact person.

4.2 Please attach a list of the major projects your firm has completed in the last three years showing the project name, location, owner, architect/engineer, general contractor, contract amount and completion date, and contact person.

5. FINANCIAL INFORMATION

5.1 Please attach your firm's most current financial statements (audited, if available), for the entity that will be signing the subcontract.

6. REFERENCES

6.1 Bank Reference:
Name
Contact Person
Telephone

6.3 Bonding Reference: Bonding Company:
Bonding Agent: Name
Address
Phone #
Bonding Capacity: $ _____ Per Project
$ _____ Aggregate
Date, amount and type of last bond issued:
Bond Rate:

6.4 Credit References:
Name
Contact Person
Telephone

7. CONTRACTOR PROFILE

7.1 Current Number of employees:
Office_____ Field _____

Subcontractor Management

7.2 Does your firm operate as a Union shop? ( ) Yes ( ) No
Merit shop? ( ) Yes ( ) No

8. SAFETY, HEALTH AND ENVIRONMENTAL

8.1 Please list your firm's Workers Compensation Interstate Experience Modification Rate.

8.2 Does your company have a written safety program? ( ) Yes ( ) No

9. INSURANCE

9.1 Attach the certificate provided by your insurance carrier.

ADDITIONAL INFORMATION

Please list any additional information that you feel will help us determine your firm's qualifications and expertise:

_____
_____
_____

This Pre-qualification Questionnaire was completed by:

Name:_____ **Title:**_____

Date:_____

Sustainability and Business Ethics Program

I. Purpose and Scope

A. Purpose

To provide guidance to management and employees in promoting sustainability, human rights and business ethics, among other topics as appropriate. To promote local community development activities that address corporate conduct including a commitment to act professionally, fairly and with integrity and conduct all business in an honest and ethical manner.

B. Scope

PNT Consulting LLC is an environmental services firm and as such employees may be working with people from all nations and social stratus, with regulatory agencies and their employees, and be exposed to the potential for influence by persons not bound by or supporting the high business standards set by PNT Consulting LLC.

To provide awareness to the potential for such conflict and provide training as appropriate as well as an avenue for feedback from employees whenever they feel they have encountered persons or pressure to act in a manner inconsistent with this document.

II. Responsibilities

A. Management is responsible for:

1. Setting a high standard of conduct for all employees to follow, promote sustainability where and to the degree appropriate to their position and authority, and respect diversity and basic human rights.

2. The proper implementation of this plan.

3. Providing appropriate training, including documentation.

4. Evaluating regulatory or other changes to the subject of this plan and updating this plan as needed to meet or exceed those changes as appropriate.

B. Employees are responsible for:

1. Attend appropriate training and applying that training on the job.

2. Notifying management of changes to requirements as noted through education, training, or exposure to best practices or improvements to the plan suggested by contact with clients.

3. Notifying management of any attempt:

    a. Bribery,

    b. Dishonest business practices,

    c. Coercion,

    d. Or any other attempt to lower the high business ethics standards set forth by PNT Consulting LLC

III. General Statements

A. General management practices:

1. Management will provide and through observation of their own actions set high business standards for PNT Consulting LLC and its employees.

    a. Promote fairness in sourcing, contracting and dealing with companies and individuals and conduct business operations in an honest and ethical manner.

    b. Identify stakeholders and develop an open communications channel to monitor the effectiveness of engagement activities

    c. Support local community and service development activities in the markets serviced by PNT Consulting LLC

2. Management will evaluate companies and their sustainability claims.

    a. Support sustainability through the assessment of sustainable products with our suppliers. Challenge them to show proof of sustainability claims with respect to products and services as well as memberships in sustainability programs and their associated claims (e.g. offset programs that might over-sell, or carbon capture programs that might release the CO2 back into the environment for a net negative effect).

    b. Employees should assist management by bringing forth observations in support or to refute claims.

3. Management will promote dialogue with vendors and contractors and to that degree possible promote the inclusion of all vendors in bids and contracts regardless of their social status.

4. Management will abide to that degree possible by business related principles of the United Nations: The Universal Declaration of Human Rights (UDHR). It is anticipated that <COMPANY NAME> will have little if any challenges that come close to those types of activities for which this document was initially created (slavery, human trafficking, genocide) but nevertheless will passively assess the performance of vendors and contractors (and others) for violations of the UDHR.

5. Management will continue to support policies and procedures for the promotion of employees within the company and provide for related career management and training.

6. Management will provide a method for anonymous claims to reach the executive level (or as may be delegated) without interference or requirement for the claimant to self-identify or be identified by any method, active or passive

7. Management and employees will uphold the following Code of Conduct:

    a. To conduct business on behalf of PNT Consulting LLC in a manner consistent with basic human rights, and promote sustainability, economic and environmental responsibility, and commit to act professionally, fairly and with integrity and conduct all business in an honest and ethical manner.

    b. To report to management attempts at bribery, coercion, deceptive or dishonest business practices that one may encounter and to not participate in activities or continue business practices with related persons or business enterprises until or unless there is a fair assessment that clears those persons or business enterprises from wrong-doing.

    c. To forward claims from subordinates without judgment to superiors for their assessment and evaluation.

    d. To promote an open-door policy between management and employees for the discussion of this Code of Conduct.

IV. Training

A. Management will provide sufficient guidance and training to employees as appropriate to implement the statements made in this document.

1. Training shall include general instruction on this document consistent with their position and potential for exposure to adverse activities and to the extent possible provide guidance on the items noted in Section II.B.

2. Employees should contact their supervisor if they identify additional topics.

Sustainability & Business Ethics

Appendix A

PNT Consulting LLC
CODE OF CONDUCT

To conduct business on behalf of PNT Consulting LLC in a manner consistent with basic human rights, and promote sustainability, economic and environmental responsibility, and commit to act professionally, fairly and with integrity and conduct all business in an honest and ethical manner.

To report to management attempts at bribery, coercion, deceptive or dishonest business practices that one may encounter and to not participate in activities or continue business practices with related persons or business enterprises until or unless there is a fair assessment that clears those persons or business enterprises from wrong-doing.

To forward claims from subordinates without judgment to superiors for their assessment and evaluation.

To promote an open-door policy between management and employees for the discussion of this Code of Conduct.

I, the undersigned, pledge to conduct business on behalf of PNT Consulting LLC in a manner consistent with this Code of Conduct.

Print Name: _Nicolaza R Harvey_____

Title: _CEO_____

Signature: *Nicolaza R Harvey*_____

Date: _6-14-2024_____

Tool Safety & Inspection

Purpose:

There are various types of tools and equipment used in the workplace for many different purposes. Examples include, but are not limited to, portable hand tools, power tools, pneumatic tools, and powder-actuated tools.

The purpose of this policy is to provide employees with appropriate knowledge relating to the care and use of tools and equipment and to protect employees from hazards associated with improper use of tools and equipment and defective and poorly maintained tools and equipment.

Policy:

Only trained and/or experienced employees may use/operate tools or equipment. Tools and equipment shall not be modified and they are to be used only for their designed purpose. It shall be the responsibility of the employee to inspect tools and equipment prior to use and to use all tools and equipment in a safe manner. Employees observed abusing, altering, modifying or misusing tools or equipment shall be subject to disciplinary action. Employees shall wear all appropriate personal protective equipment while using tools and equipment. Additionally if a tool or piece of equipment is found to be defective, the tool/equipment shall be red-tagged, taken out of service until it can be replaced or repaired by a qualified person.

It shall be the responsibility Project Manager or Site Superintendent to designate a competent person who will be assigned to be responsible for testing/inspecting and repairing all tools and equipment. All periodic inspections, maintenance and repairs of tools or equipment shall be documented.

Procedure:

General Tool Safety:

Many serious injuries have resulted from the improper use of tools and equipment. Many of these injuries could have been prevented if the following rules were followed:

Inspection and Maintenance:

All tools shall be identified and inventoried either individually or by group.

All tools in the inventory shall have a documented inspection at least once every six months. In addition to these periodic documented inspections all tools shall be inspected prior to issue and upon return by the tool room attendants and prior to each use by the user.

All tools will be kept in good working condition with no modifications.

All periodic inspections and all maintenance & repairs shall be documented. Completed forms shall be kept in a binder in the tool room or tool trailer for one year. The binder shall contain a copy of the inspection checklist for the type for tools and/or equipment being inspected.

- **Selection**

Use the right tool for the task instead of trying to make the wrong one fit.

- **Use**

Keep control of yourself, the tool, and the job. When applying force with a tool, remember that it may slip, break, or just suddenly do its job. Watch your hands and your balance (body mechanics) to avoid injury.

Vibration Absorbing Gloves are to be made available to workers using pneumatic impact guns or other vibrating equipment. These gloves are required PPE for worker's operating heavy vibrating tools (i.e. jack hammers, 90 guns, impact guns etc.). The use of these gloves are designed to dampen vibration, dissipate impact and absorb shock, they can assist in the prevention of cumulative trauma injury often associated with operating this type of equipment. They only work if you use them.
Select the right protective equipment for the task and use it properly.
Do not use tools and equipment that you have not been trained to use.

- **Care**

Take proper care of your tools and equipment. Keep them stored where they will not get damaged and will not present a hazard.

Check your tools and equipment prior to use for defects, wear, or damage. Immediately remove from service and tag any defective tools. Damaged tools shall be turned into the tool room for repair or replacement.

- **Supervision**

Supervisors shall be responsible for ensuring that employees are trained before using a specific tool. Watch your employees at work. Ask them about their immediate assignment and take an interest in finding the safest way to do the job. Then follow up to insure that the tools and equipment in your area are being used safely.

Hand Tool Safety

Hand tools shall only be used for the purpose for which they are intended.

All appropriate PPE will be worn while using hand tools.

Wrenches, including adjustable, pipe and socket shall not be used when jaws are sprung to the point of slippage.

Pipe wrench parts (i.e., jaws) are not to be removed and used for anything other than the manufactured use.

The use of snipes and cheater bars or double wrenching to gain leverage **is prohibited.**

Always use tool holder while using hammer and knocker wrenches.

Hand tools shall be tagged and removed from service if any of the following defects are present:

- Impact tools, such as hammers, flange wedges chisels, drift pins, pin bars and knocker wrenches with visible signs of mushrooming, cracking or bending.
- Wooden handle tools, such as hammers, picks, shovels, and brooms with visible sign of cracking, loosening or splintering of the handle.

- Wrenches, such as adjustable, combo and pipe with visible signs of bending, cracking, defective handles or other defects that impair their strength.

Electrical Power Tool Safety

All appropriate PPE will be worn while using power tools.

Be sure that the proper permit has been obtained prior to use of electrical power tools.

GFCI's are to be used with all portable electric equipment. GFCI's are to be inspected and tested prior to each use.

Do not connect electrical power unless the operating switch is turned off.

Employee shall avoid loose fitting clothing when operating power tools.

The power source on tools shall be physically disconnected prior to attempting any repairs or attachment replacement.

Protective guards on power tools **shall not** be removed, altered or modified.

Trigger/switch locks on power tools are prohibited.

All electrical tools and power cords must be inspected per the Electrical Equipment Safety and Inspection Policy.

Electrical tools and power cords must display the current inspection color code for the current inspection period to it being placed in service.

Electrical tools **shall not** be hoisted or carried by their power cords.

Cords are tripping hazards. Route them so as to minimize interference in walkways. Overhead is preferred.

Electrical power tools shall be tagged and removed from service if any of the following defects are present:

- Electrical power tool cord does not have current inspection color code.
- Power cord is frayed, cut or damaged. The use of electrical tape to cover damage to cords **is prohibited**.
- Defective or faulty on/off switches.
- Loose or defective components

Air Power Tool Safety

All hoses exceeding 1/2" inside diameter shall have a safety device at the source of supply or branch line to reduce pressure in case of hose failure.

Chicago fittings shall be pinned.

Attachments on air tools shall be secured by retainer pins and rings.

Do not connect air unless the operating switch is turned off.

Do not disconnect tool until air supply is shut off and air pressure is bled off.

Air power tools **shall not** be hoisted or carried by their hoses.

Hoses are tripping hazards. Route them so as to minimize interference in walkways. Overhead is preferred.

Air power tools shall be tagged and removed from service if any of the following defects are present:

- Air power tools, such as air power grinders, impact wrenches, German hacksaws with visible signs of deformities in the body of the tool, improperly functioning actuator, bent or deformed blades, or any signs of obvious damage to the air supply line fittings.
- Hoses must be visually inspected for cracking, signs of aging, worn or damaged connecting fittings, or any other obvious deformities, such as blistering or bulges.

Powder Actuated Tool Safety

Only employees who have received an approved training course and license for the particular tool to be used may operate powder-actuated tools.

Tool room personnel shall not issue powder-actuated tools unless the person requesting the tool can provide a current license for that tool.

Powder-actuated tools shall be tested prior to use to ensure all safeties are functioning.

The fastener **shall not** be loaded until ready for the shot. The tool **shall not** be left unattended unless it is unloaded.

Never point either an empty or loaded tool at any person.

Keep both hands and feet clear of the open-end of the barrel.

In the event of a misfire, the operator shall hold the tool firmly against the work surface for a period of 30 seconds and then follow manufacturer's instructions.
Personnel, other than the operator of the tool, must stay clear of the area where the tool is being used.
Operators of powder-actuated tools shall wear goggles for eye protection while operating these tools.
A sign at least 8 x 10 inches, using boldface type no less than 1 inch in height, shall be posted within 50 feet of the area where the tool is being used. The sign shall bear the following wording:

CAUTION
POWDER-ACTUATED TOOL IN USE

Powder-actuated tools shall be tagged and removed from service if any of the following defects are present:

- Tool has visible signs of worn or damaged parts.
- Missing or malfunctioning parts or accessories.
- Missing operator's instruction manual or missing power load and fastener chart.

- Tool misfires more than one time during use.

Abrasive Wheel Machinery

Abrasive wheels shall be used only on machines provided with safety guards as defined:

- The safety guard shall be mounted so as to maintain proper alignment with the wheel, and the strength of the fastenings shall exceed the strength of the guard.
- Grinding machines shall be equipped with flanges
- Abrasive wheel machinery guards shall meet the design specifications of the American National Standard Safety Code for the Use, Care, and Protection of Abrasive Wheels, ANSI B7.1-1970, which is incorporated by reference as specified in Sec. 1910.6.
- Never exceed the maximum wheel speed RPM. (every when is marked) Check the speed marked on the wheel and compare it to the speed on the grinder.
- When installing the wheel, check for cracks and defects. Ensure mounting flanges are clean and the mounting blotters are used. Do not over tighten the mounting nut.

Tree Trimming and Removal

Purpose

PNT Consulting LLC understands that tree trimming, and removal presents multiple potential hazards ranging from the use of chain saws, working at heights, electrocution, falling limbs and trees, flying chips, noise, etc. All tree trimmers must be thoroughly trained in proper techniques, and protective measures prior to assignment.

Administration

Paul B Harvey is responsible to the implementation and maintenance of this program. A copy of the Tree Trimming and Removal Program is located in the safety office.

Protective Equipment

The following protective equipment should always be used:

- Hard hat • Gloves
- Non-slip safety toe boots
- Safety glasses
- Face shield
- Cut resistant leg protection (chaps)
- Hearing protection
- Climbing equipment as appropriate
    - o Safety harnessed
    - o Belts o Ropes
    - o Lanyards
    - o Slings
    - o Carabiners

Pre-start inspection

A hazard inspection and briefing must be performed before the start of each job. During this briefing you should analyze the potential dangers of performing the job. Based on the analysis choose a plan of attack and proper equipment that will help you carry out the job safely. Some items to check for include:

- Condition of the tree such as presence of cracks, cankers, splits; dead and rotten branches. Look for hives or other signs of animals, poison ivy growing on or around the tree.
- Presence of electrical powerlines that may be in proximity.
- Nearby structures and objects; if working near a roadway, flaggers, and traffic control devices such as cones may be needed.
- Check condition of all equipment- belts, harnesses, ropes for cuts, fraying, deterioration; Clips, buckles, rivets, snap catches, and carabiners close securely and are appropriate.

Electrical Hazards

Only qualified line clearance tree trimmers are allowed to work within 10 feet of energized powerlines. All employees are required to keep the minimum distances shown in the following table:

Nominal Voltage kV Phase to Phase	Distance
	Ft-in
0.0-1.0	10-00
1.1-15.0	10-00
15.1-36.0	10-00
36.1-50.0	10-00
50.1-72.5	10-09
72.6-121.0	12-04
138.0-145.0	13-02
161.0-169.0	14-00
230.0-242.0	16-05
345.0-362.0	20-05
500.0-550.0	26-08
785.0-800.0	35-00

Preventing Injury from Falling Trees and Limbs

• Limbs that cannot be dropped safely should be lowered with a rope.
• Do not leave cut limbs in a tree. Drop or lower them to the ground.
• Do not turn your back on a tree where branches are being cut or a tree being felled.
• Follow a two-tree rule when felling. No one (other than the feller) should be within two tree lengths of the tree being felled.
• Maintain a greater distance when felling on a slope where logs could roll or slide.
• Always be aware of your surroundings. Talk with coworkers to ensure you know what kind of work they are doing and where. Chainsaws
• Only trained and authorized operators shall be permitted to operate the designated equipment.

PERSONAL PROTECTIVE EQUIPMENT IS MANDATORY AND SHALL INCLUDE THE FOLLOWING:

- Safety goggles
- Hearing protection
- Boots/Steel toe shoes
- Gloves o Chaps
- Hard hat with face protector
- Snug fitting closes
- Keep bystanders and animals out of the work area.
- Do not operate the unit when you are fatigued, ill, or if you are under the influence of alcohol, drugs, or medication.
- Do not operate a chain saw that is damaged, improperly adjusted, or not completely and securely assembled.
- Do not start cutting until you have a clear work area, secure footing, and a planned escape route.
- Prior to starting the engine, ensure that the nose of the saw is free of contact with anything.
- Keep the handles dry, clean, and free of oil or fuel mixture.

- Operate the chain saw only in well-ventilated areas.
- Keep all parts of your body away from the saw chain when the engine is running.
- Carry the chain saw with the engine stopped, the guide bar and chain to the rear with the muffler away from your body. Use the appropriate guide bar safety cover.
- Shut off the engine before setting the chain saw down
- Use caution when cutting small size brush; slender material may catch the saws chain pulling you off balance.
- When cutting a limb that is under tension be alert for spring back so that you will not be struck when the tension in the wood fibers are released.
- Do not operate a chain saw in a tree unless you have been specifically trained.
- All chain saw service should be performed by competent chain saw service personnel.

Kick Back Safety

• Keep a good firm grip on the saw with both hands when the engine is running. Use the chain brake and kickback guard.
• Do not let the nose of the saw contact a log, branch, or any other object in the cutting path which may cause kickback.
• Cut at high engine speeds to reduce possibility of kickback.
• Do not overextend or cut above shoulder height.
• Keep the chain sharp and properly adjusted.
• Specialty Items
• Avoid making cuts with the saw between your feet and legs, always cut with the saw to the outside of your legs.
Never position yourself or others in line with the chain. A broken chain will fly forward in the direction the guide bar is pointing.
• Keep the chains clean to prolong its life and to reduce the hazard of debris being thrown.

Training Requirements

Tree trimmers must receive formal training on climbing and use of climbing equipment including the use of the various type of knots that can be found in:

• Arborists Certification Study Guide
• Tree Climbers Guide
• National Tree Climbing Guide

In addition, tree trimmers must receive training in the use of aerial platforms, chain saws and other power tools used on the job, use and care of PPE, proper limb cutting and tree felling techniques, electrical limited approach boundaries

WELL CONTROL POLICY

1.0 PURPOSE

The purpose of this policy is to provide information and procedures to ensure any well control risk pertaining to the service provided by **XXXXXXXX** is eliminated or minimized to the lowest potential. This policy is designed to meet all requirements of applicable API standards in order to protect all employees and assets of **XXXXXXXX** as well as those of our customers and any other person or contractor on a well pad live well operations are taking place.

2.0 OBJECTIVE

This policy will outline **XXXXXXXX** approach to well control operations. This includes: employee responsibility, training and certification (employees) requirements, equipment requirements and processes/procedures.

3.0 RESPONSIBILITY

3.1 Chief Executive, Financial, and Operating Officers

- Review and approve the Well Control Policy.
- Ensure well control practices and procedures are established and risk assessments are being performed via the Management Review process.
- Provide resources to identify aspects and conduct operational risk assessment to determine well control practices. .
- Provide resources to implement control measures recommended by well control risk assessments.

3.2 Superintendents

The Superintendents serve as the Management level authority on well control. Superintendents are responsible for the following functions:

- Ensure that adequate well control procedures are established, implemented, and maintained in accordance with all applicable federal, state, local, as well as regulatory and customer specific laws.
- Responsible to ensure that all critical well control equipment is in compliance with all applicable federal, state, local, as well as regulatory and customer specific laws.

- Monitor new laws and regulations and changes to existing laws and regulations for potential impact on operations and compliance.

- Communicate relevant information on legal and other requirements to management, those working for, or on behalf of, the company and other relevant interested parties.

- Develop and provide training for **XXXXXXXX** employees.

- Participate in operational risk assessments and contingency planning for possible well control events.

- Responsible to ensure that all critical well control equipment is in compliance with all applicable federal, state, local, as well as regulatory and customer specific laws.

- Conduct routine audits of field personnel knowledge of SOPs and well control procedures.

- Coordinate with the Quality Department to ensure all documents pertaining to well control equipment (Certifications, testing, maintenance, etc.) are properly maintained.

3.3 Snubbing Unit and Service Rig Supervisors

XXXXXXXX Employees who hold the title of Field Supervisors are responsible for the following functions:

- Provides an onsite representative to ensure that all standard operating procedures and well control measures are being properly executed.

- Monitor all well completion operations that **XXXXXXXX** Snubbing Unit or Service Rigs are being utilized, to ensure all well measurements are within specified parameters.

- Communicate well control risks and policies for operational tasks with onsite customer representatives.

- Train crews on individual responsibilities for well control procedures (shutting in well, tubing releases, casing releases, etc.)

- Execute BOP drills and validate crew performance. Provide remedial training to any crew members that are lacking.

- Ensure all well control equipment on location is functioning properly and in compliance.
- Oversee maintenance on well control equipment and communicate issues with the Service Manager.

3.4 Snubbing Unit Operators and Service Rig Drillers

Each employee is responsible for:

- Running equipment (Snubbing Unit or Service Rigs).
- Being proficient at reading well monitoring instrumentation and knowing indicators of possible well control events.
- Executing procedures for shutting in the well while operating a snubbing unit or service rig.
- Completing Well Control Training to obtain supervisor level well control certification.

3.5 Floor Hands

Each employee is responsible for:

- Knowing and executing their responsibilities during well control drill and possible well control events.

3.6 Service Manager and Service Quality Manager

Each employee is responsible for:

- Coordinating maintenance with 3rd party vendors that are approved by the OEM to service, test, and certify well control equipment. Ensuring the equipment remains compliant to federal and regulatory laws.

3.7 HSE Department

Each employee is responsible for:

- Coordinating all 3rd party well control training
- Maintaining records of all well control certified employees.

4.0 Training and Certification

4.1 Minimum Training Requirements

- Well Control Certification (IADC, WellCAP Training, WO/WS 5 day course, IWCF Level 2 Certification [minimum], or Well Service Blowout Prevention certification)
    - Superintendent, Snubbing Supervisor, Snubbing Operator, Rig Supervisor, Driller
- Well Control Awareness (Included in IADC RigPASS training)
    - All other employees.

4.2 Certification Tracking

- **XXXXXXXX** accepts well control certifications from the following organizations.

- International Association of Drilling Contractors (IADC)
- International Well Control Forum (IWCF)

- **XXXXXXXX** management has determined that **XXXXXXXX** is responsible to provide and renew IADC Well Control Certifications for employees. Employees with Well Control Certifications from other organizations will be responsible for renewing their certifications if they desire so.
- The Training and Safety Manager is responsible for developing and maintaining the **XXXXXXXX** Training that includes the Well Control Certification expiration dates.
- The **XXXXXXXX** Training Matrix will alert the managers responsible for maintaining it by turning dates within 90 days of expiration yellow, 60 days orange, and expired dates red.
- The Training and Safety Manager is responsible for reporting and coordinating expiry dates to operations to have employees scheduled to be recertified; as well as enrolling newly promoted employees into Well Control Schools.
- All newly hired employees with well control credentials will submit certifications to the Human Resources Department, so they can be submitted to the safety manager responsible for updating the Training Matrix .
- In the event that an **XXXXXXXX** employee is moved into a position of need before he is able to obtain a Well Control Certification a management of change (MOC) and risk assessment will be developed and approved by the management staff.
- MOCs will be tracked utilizing the **XXXXXXXX** Maintenance Work Order System.

5.0 Equipment

5.1 Certification of Equipment

The following outlines the requirements for all company owned well control equipment

- New well control equipment must be provided with a certificate of conformance to the appropriate API specification.

- Well control equipment recertification must be completed by an approved service provider at an interval no longer than provided by the OEM or 5 years.

- Any well control equipment involved in a well control incident or incident involving potential damage to the safe operation must be removed from service immediately. All servicing of the equipment must be done by an approved service provider.

5.2 Documentation

The following documentation is required to be provided in the OEM "databook"

- Pressure test charts as required by API standard
- Hardness testing documentation
- Inspection/Dimensional Reports
- NDT Results
- Welding and welder qualification documentation
- Material testing documentation
- NACE MR0175 compliance documentation

5.3 Document Control

- All documentation must be saved electronically according to the equipment serial number within the assigned equipment's maintenance folder. Any revision or addition to equipment documentation must be added to the original. Documents must be retained for the life of the equipment.

6.0 On Site Well Control Equipment Testing

The following testing requirements must be met after installation on location according to **XXXXXXXX** SOP. All requirements are in compliance with API Standard. All well control equipment shall have a working pressure equal to the maximum anticipated surface pressure expected.

Pressure Designation	Rated Working Pressure
2K	2,000 psi (13.79 MPa)
3K	3,000 psi (20.68 MPa)
5K	5,000 psi (34.47 MPa)
10K	10,000 psi (68.95 MPa)
15K	15,000 psi (103.42 MPa)
20K	20,000 psi (137.90 MPa)
25K	25,000 psi (172.37 MPa)
30K	30,000 psi (206.84 MPa)

6.1 Minimum Requirements

- Low pressure tests are required for all components that may be exposed to wellbore pressure between 250 and 350 PSI prior to testing to a higher pressure.
- Stabilized low and high pressure tests must be held for a minimum of 5 minutes with no visible leakage.
- Initial pressure testing prior to equipment being put into service on a well site shall be in accordance with the following table:

Component to Be Tested	Pressure Test—Low Pressure [a] psi (MPa)	Pressure Test—High Pressure [b c] psi (MPa)
Annular preventer	250 to 350 (1.72 to 2.41)	Lesser of 70 % of annular RWP, RWP of wellhead, or ram preventer test pressure.
Operating chambers	N/A	Maximum operating pressure recommended by the annular BOP manufacturer.
Ram preventers		
Fixed pipe	250 to 350 (1.72 to 2.41)	RWP of ram BOPs or RWP of the wellhead system, whichever is lower.
Variable bore		
Blind/blind shear		
Operating chamber	N/A	Maximum operating pressure recommended by the ram BOP manufacturer.
Choke and kill lines and valves	250 to 350 (1.72 to 2.41)	RWP of ram BOPs or RWP of the wellhead system, whichever is lower.
Operating chamber	N/A	Maximum operating pressure recommended by the valve manufacturer.
Choke manifold		
Upstream of choke(s)	250 to 350 (1.72 to 2.41)	RWP of ram BOPs, RWP of the wellhead system, or RWP choke(s) inlet, whichever is lower.
Downstream of choke(s)		RWP of choke(s) outlet, valve(s), or line(s), whichever is lower.
Adjustable chokes	Function test only; verification of backup system.	
BOP control system		
Manifold and BOP lines	N/A	Control system maximum operating pressure.
Accumulator pressure	Verify precharge.	N/A
Close time	Function test.	N/A
Pump capability		
Control stations		
Safety valves		
Kelly, kelly valves, and safety valves	250 to 350 (1.72 to 2.41)	RWP of components.
Auxiliary equipment		
Poor boy degasser/MGS [d]	In accordance with equipment owner's PM program.	Flow test.
Trip tank, flo-show, etc.	Visual and manual verification.	Flow test.

[a] The low-pressure test shall be stabilized for at least 5 minutes with no visible leaks. Flow-type test shall be of sufficient duration to observe for significant leaks.

[b] The high-pressure test shall be stabilized for at least 5 minutes with no visible leaks.

[c] Well control equipment may have a higher rated working pressure than required for the well site. The site-specific test requirements shall be used for these situations.

[d] The MGS requires a one-time hydrostatic test during manufacturing or upon installation. Subsequent welding on the MGS vessel shall require an additional hydrostatic test to be performed.

- Any subsequent pressure testing shall be in accordance with the following table:

Component to Be Tested	Pressure Test—Low Pressure [a] psi (MPa)	Pressure Test—High Pressure [b c] psi (MPa)
Annular preventer	250 to 350 (1.72 to 2.41)	Minimum of MASP for the hole section or 70 % of annular RWP, whichever is lower.
Ram preventers		
Fixed pipe	250 to 350 (1.72 to 2.41)	MASP of the hole section.
Variable bore		
Blind/blind shear		
Casing rams (prior to running casing)		
Choke and kill lines and valves		
Choke manifold		
Upstream of choke(s)	250 to 350 (1.72 to 2.41)	Same as the ram preventer.
Downstream of choke(s)	250 to 350 (1.72 to 2.41)	RWP of choke(s) outlet, valve(s), or line(s), whichever is lower.
Adjustable chokes	Function test only.	Verification of backup control system.
BOP control system		
Manifold and BOP lines	Function test in accordance with equipment owner's PM program.	In accordance with equipment owner's PM program.
Accumulator pressure	Function test in accordance with equipment owner's PM program.	
Close time	Verify functionality of backup systems.	
Pump capability		
Control stations		
Safety valves		
Kelly, kelly valves, and safety valves	250 to 350 (1.72 to 2.41)	MASP of the hole section.
Auxiliary equipment		
Poor boy degasser/MGS [d]	Optional flow test.	N/A
Trip tank, flo-show, etc.	Visual and manual verification.	Daily.

[a] The low-pressure test shall be stabilized for at least 5 minutes with no visible leaks. Flow-type test shall be of sufficient duration to observe for significant leaks.

[b] The high-pressure test shall be stabilized for at least 5 minutes with no visible leaks.

[c] Well control equipment may have a higher rated working pressure than required for the well site. The site-specific test requirements shall be used for these situations.

[d] The MGS requires a one-time hydrostatic test during manufacturing or upon installation. Subsequent welding on the MGS vessel shall require an additional hydrostatic test to be performed.

- Well control equipment must be function tested at least once per week to ensure proper operation (Pressure tests qualify as function tests).

- Pressure tests are not to exceed intervals of 21 days.

7.0 Well Control Equipment Service and Repair

7.1 On-site repair

- On site repair of well control equipment components may be completed by authorized employees only. Field repairs are limited to replacing equipment parts with replacement parts. No other repairs shall be made in the field.

- Any repair that includes welding, machining, or modification must be done by an approved supplier according to the appropriate API specification.

7.2 Shop Repair

- Shop repair of well control equipment components may be completed by authorized employees only. All repairs to well control equipment shall be documented within the **XXXXXXXX** maintenance system.

8.0 Well Control Drills

8.1 Type, Frequency, Requirement

- Well control drills must be conducted weekly or more frequently as required by the customer.

- Drills require that the well be shut in and all crewmembers assemble at location's muster area including a brief review of drill effectiveness. All employees must sign in at the muster area for recordkeeping purposes on Training Sign-In – BOP Drills

- Well control drills must be completed in accordance with Well Control Emergency Response, or rig specific procedures.

9.0 DEFINITIONS

API – American Petroleum Institute
BOP – Blowout Preventer
DWS – Deep Well Services
IADC – International Association of Drilling Contractors
IWCF – International Well Control Forum
MASP – Maximum Anticipated Surface Pressure
NDT – Non-Destructive Testing
OEM – Original Equipment Manufacturer
RWP – Rated Working Pressure
SOP – Standard Operating Procedure

7.0 RELATED DOCUMENTS

API 16A Specification for Drill-through Equipment
API STD 53 Blowout Prevention Equipment Systems for Drilling Wells
API 6A Specification for Wellhead and Christmas Tree Equipment

Working Over or Near Water

PURPOSE:

The purpose of this policy is to comply with OSHA and other regulatory compliance standards which require employers to provide employees with a safe working environment when working over or near water, where the danger of drowning exists.

SCOPE:

This policy applies to all employees working at locations which include, but are not limited to, the following: piers, docks, marine terminals, inland waterways, lakes and off-shore platforms.

PROCEDURES:

- All employees who are working over or near water, where the danger of drowning exists, shall be provided with U.S. Coast Guard-approved life jacket or buoyant work vests.
- Prior to and after each use, the buoyant work vests or life preservers shall be inspected for defects which would alter their strength or buoyancy. Defective units shall not be used.
- Ring buoys with at least 90 feet of line shall be provided and readily available for emergency rescue operations. Distance between ring buoys shall not exceed 200 feet.
- At least one lifesaving skiff shall be immediately available at locations where employees are working over or adjacent to water.
- Active work areas shall be kept free of equipment and materials not in use, and clear of debris, projecting nails, strapping and other sharp objects not necessary for the work in progress.
- Hatch beams, covers and pontoons placed on the dock or terminal working areas shall be stowed in stable piles with beams secured against tipping or falling. Alternatively, beams may be laid on their sides. When beams and pontoons are stowed in tiers more than one high, dunnage or other suitable material shall be used under and between tiers.
- Cargo and material shall not obstruct access to vessels, cranes, vehicles or buildings. Means of access and egress within the buildings shall be similarly unobstructed.
- Dunnage, lumber or shoring material in which there are visibly protruding nails shall be removed from the immediate work area or if left in the area, the nails shall be rendered harmless.
- All working walking surfaces shall be kept free of slippery conditions to the extent possible by the company. Adverse weather conditions may cause wet conditions, but extra caution will be taken when work is required during adverse weather.

TRAINING:

All employees that are required to work over or near water will receive training on this policy and MMS Trash & Debris. Documentation of training will include dates of training, names of employees attending the training, and the instructor's signature. Where BOSEIT, HUET, SafeGulf or any client specific training is required, affected employees will receive initial and refresher training prior to dispatch offshore.

Offshore Orientation:

- All employees will receive a site specific orientation and the orientation will include the following:
    - An accounting system for the whereabouts of offshore personnel
    - Station bill location
    - Assignments in emergencies
    - Pollution prevention
- Field Safety Supervisors will assign emergency procedures to be taken by each employee before each specific offshore job.
- Emergency assignments will coordinate with the host/client procedures.
- All employees or groups of employees will have some form of radio communication.
- All employees will be orientated on each specific jobsite's emergency signals and shutdown systems.
- First aid equipment will be sufficient and appropriate for the number of personnel on the job, and readily available.
- All best practices and host/facility safe procedures will be followed.
- The client/host facility will coordinate and facilitate and the following:
    - Escape routes
    - Evacuation procedures
    - Safe transfer procedures
    - Use of swing ropes and/or personnel baskets
    - Fire protection
    - Spill protection

Working Over or Near Water

- All employees will be instructed to:
    - Not jump into the water unless it is the only means of evacuation
    - If entering the water to escape is necessary:
        - Stay calm
        - Stay in a group
        - Conserve energy
        - Conserve body heat
        - Await assistance

Written Silica Exposure Control Program

Respirable Crystalline Silica Program

PURPOSE

This Respirable Crystalline Silica Program was developed to prevent employee exposure to hazardous levels of Respirable Crystalline Silica that could result through construction activities or nearby construction activities occurring on worksites. Respirable Crystalline Silica exposure at hazardous levels can lead to lung cancer, silicosis, chronic obstructive pulmonary disease, and kidney disease. It is intended to meet the requirements of the Respirable Crystalline Silica Construction Standard (29 CFR 1926.1153) established by the Occupational Safety and Health Administration (OSHA).

All work involving chipping, cutting, drilling, grinding, or similar activities on materials containing Crystalline Silica can lead to the release of respirable-sized particles of Crystalline Silica (i.e. Respirable Crystalline Silica). Crystalline Silica is a basic component of soil, sand, granite and many other minerals. Quartz is the most common form of Crystalline Silica. Many materials found on constructions sites include Crystalline Silica; including but not limited to – cement, concrete, asphalt, pre-formed structures (inlets, pipe, etc.) and others. Consequently, this program has been developed to address and control these potential exposures to prevent our employees from experiencing the effects of occupational illnesses related to Respirable Crystalline Silica exposure.

SCOPE

This Respirable Crystalline Silica Program applies to all employees who have the potential to be exposed to Respirable Crystalline Silica when covered by the OSHA Standard. The OSHA Respirable Crystalline Silica Construction Standard applies to all occupational exposures to Respirable Crystalline Silica in construction work, except where employee exposure will remain below 25 micrograms of Respirable Crystalline Silica per cubic meter of air (25 $\mu g/m^3$) as an 8-hour time-weighted average (TWA) under any foreseeable conditions.

RESPONSIBILITIES

PNT Consulting LLC firmly believes protecting the health and safety of our employees is everyone's responsibility. This responsibility begins with upper management providing the necessary support to properly implement this program. However, all levels of the organization assume some level of responsibility for this program including the following positions.

- Safety Department (Replace with Upper Management for Smaller Contractors):

- Conduct job site assessments for Silica containing materials and perform employee Respirable Crystalline Silica hazard assessments in order to determine if an employee's exposure will be above 25 μg/m^3 as an 8-hour TWA under any foreseeable conditions

- Select and implement into the project's ECP the appropriate control measures in accordance with the Construction Tasks identified in OSHA's Construction Standard Table 1; and potentially including (but not limited to) - a written Exposure Control Plan (ECP), exposure monitoring, Hazard Communication training, medical surveillance, housekeeping and others.

NOTE: OSHA's Construction Standard Table 1 is a list of 18 common construction tasks along with acceptable exposure control methods and work practices that limit exposure for those tasks.

- Ensure that the materials, tools, equipment, personal protective equipment (PPE), and other resources (such as worker training) required to fully implement and maintain this Respirable Crystalline Silica Program are in place and readily available if needed.

- Ensure that Project Managers, Site Managers, Competent Persons, and employees are educated in the hazards of Silica exposure and trained to work safely with Silica in accordance with OSHA's Respirable Crystalline Silica Construction Standard and OSHA's Hazard Communication Standard. Managers and Competent Persons may receive more advanced training than other employees.

- Maintain written records of training (for example, proper use of respirators), ECPs, inspections (for equipment, PPE, and work methods/practices), medical surveillance (under lock and key), respirator medical clearances (under lock and key) and fit-test results.

- Conduct an annual review (or more often if conditions change) of the effectiveness of this program and any active project ECP's that extend beyond a year. This includes a review of available dust control technologies to ensure these are selected and used when practical.

- Coordinate work with other employers and contractors to ensure a safe work environment relative to Silica exposure.

- Project Manager (Merge with Site Manager for Smaller Contractors):

- Ensure all applicable elements of this Respirable Crystalline Silica Program are implemented on the project including the selection of a Competent Person.

- Assist the Safety Department in conduct job site assessments for Silica containing materials and perform employee Respirable Crystalline Silica hazard assessments in order to determine if an ECP, exposure monitoring, and medical surveillance is necessary.

- Assist in the selection and implementation of the appropriate control measures in accordance with the Construction Tasks identified in OSHA's Construction Standard Table 1; and potentially including (but not limited to) - a written Exposure Control Plan (ECP), exposure monitoring, Hazard Communication training, medical surveillance, housekeeping and others.

- Ensure that employees using respirators have been properly trained, medically cleared, and fit-tested in accordance with the company's Respiratory Protection Program. This process will be documented.

- Ensure that work is conducted in a manner that minimizes and adequately controls the risk to workers and others. This includes ensuring that workers use appropriate engineering controls, work practices, and wear the necessary PPE.

- Where there is risk of exposure to Silica dust, verify employees are properly trained on the applicable contents of this program, the project-specific ECP, and the applicable OSHA Standards (such as Hazard Communication). Ensure employees are provided appropriate PPE when conducting such work.

- Competent Person and/or Site Manager (Superintendent, Foreman, etc.)

- Make frequent and regular inspections of job sites, materials, and equipment to implement the written ECP.

- Identify existing and foreseeable Respirable Crystalline Silica hazards in the workplace and take prompt corrective measures to eliminate or minimize them.

- Notify the Project Manager and/or Safety Department of any deficiencies identified during inspections in order to coordinate and facilitate prompt corrective action.

- Assist the Project Manager and Safety Department in conducting job site assessments for Silica containing materials and perform employee Respirable Crystalline Silica hazard

- Written Silica Exposure Control Program
  assessments in order to determine if an ECP, exposure monitoring, and medical surveillance is necessary.

- Employees:

- Follow recognized work procedures (such as the Construction Tasks identified in OSHA's Construction Standard Table 1) as established in the project's ECP and this program.

- Use the assigned PPE in an effective and safe manner.

- Participate in Respirable Crystalline Silica exposure monitoring and the medical surveillance program.

- Report any unsafe conditions or acts to the Site Manager and/or Competent Person.

- Report any exposure incidents or any signs or symptoms of Silica illness.

DEFINITIONS

If a definition is not listed in this section, please contact your supervisor. If your supervisor is unaware of what the term means, please contact the Competent Person or your Safety Department.

- Action Level means a concentration of airborne Respirable Crystalline Silica of 25 $\mu g/m^3$, calculated as an 8-hour TWA.

- Competent Person means an individual who is capable of identifying existing and foreseeable Respirable Crystalline Silica hazards in the workplace and who has authorization to take prompt corrective measures to eliminate or minimize them.

- Employee Exposure means the exposure to airborne Respirable Crystalline Silica that would occur if the employee were not using a respirator.

- High-Efficiency Particulate Air (HEPA) Filter means a filter that is at least 99.97 percent efficient in removing monodispersed particles of 0.3 micrometers in diameter.

- Objective Data means information, such as air monitoring data from industry-wide surveys or calculations based on the composition of a substance, demonstrating employee exposure to Respirable Crystalline Silica associated with a particular product or material or a specific process, task, or activity. The data must reflect workplace conditions closely resembling or with a higher exposure potential than the processes, types of material,

control methods, work practices, and environmental conditions in the employer's current operations.

- Permissible Exposure Limit (PEL) means the employer shall ensure that no employee is exposed to an airborne concentration of Respirable Crystalline Silica in excess of 50 $\mu g/m^3$, calculated as an 8-hour TWA.

- Physician or Other Licensed Health Care Professional (PLHCP) means an individual whose legally permitted scope of practice (i.e., license, registration, or certification) allows him or her to independently provide or be delegated the responsibility to provide some or all of the particular health care services required by the Medical Surveillance Section of the OSHA Respirable Crystalline Silica Standard.

- Respirable Crystalline Silica means Quartz, Cristobalite, and/or Tridymite contained in airborne particles that are determined to be respirable by a sampling device designed to meet the characteristics for respirable-particle size- selective samplers specified in the International Organization for Standardization (ISO) 7708:1995: Air Quality-Particle Size Fraction Definitions for Health-Related Sampling.

- Specialist means an American Board Certified Specialist in Pulmonary Disease or an American Board Certified Specialist in Occupational Medicine.

- REQUIREMENTS

- Specified Exposure Control Methods

When possible and applicable, PNT Consulting LLC will conduct activities with potential Silica exposure to be consistent with OSHA's Construction Standard Table 1. Supervisors will ensure each employee under their supervision and engaged in a task identified on OSHA's Construction Standard Table 1 have fully and properly implemented the engineering controls, work practices, and respiratory protection specified for the task on Table 1 (unless PNT Consulting LLC has assessed and limited the exposure of the employee to Respirable Crystalline Silica in accordance with the Alternative Exposure Control Methods Section of this program).

Written Silica Exposure Control Program

The task(s) being performed by PNT Consulting LLC identified on OSHA's Construction Standard Table 1 is/are: Select any/all of the following that apply:

Table 1: Specified Exposure Control Methods When Working With Materials Containing Crystalline Silica

Construction Task or Equipment Operation		Engineering and Work Practice Control Methods	Required Respiratory Protection	
			≤ 4 hours/shift	>4 hours/shift
1	Stationary masonry saws	• Use saw equipped with integrated water delivery system that continuously feeds water to the blade. • Operate and maintain tool in accordance with manufacturer's instructions to minimize dust emissions.	None	None
2a	Handheld power saws (any blade diameter) when used outdoors	• Use saw equipped with integrated water delivery system that continuously feeds water to the blade. • Operate and maintain tool in accordance with manufacturer's instructions to minimize dust emissions.	None	N95 (or Greater Efficiency) Filtering Facepiece or Half Mask
2b	Handheld power saws (any blade diameter) when used indoors or in an enclosed area	• Use saw equipped with integrated water delivery system that continuously feeds water to the blade. • Operate and maintain tool in accordance with manufacturer's instructions to minimize dust emissions.	N95 (or Greater Efficiency) Filtering Facepiece or Half Mask	N95 (or Greater Efficiency) Filtering Facepiece or Half Mask
3	Handheld power saws for cutting fiber-cement board (with blade diameter of 8 inches or less) for tasks performed outdoors only	• Use saw equipped with commercially available dust collection system. • Operate and maintain tool in accordance with manufacturer's instructions to minimize dust emissions. • Dust collector must provide the air flow recommended by the tool manufacturer, or greater, and have a	None	None

Construction Task or Equipment Operation		Engineering and Work Practice Control Methods	Required Respiratory Protection	
			≤ 4 hours/shift	>4 hours/shift
		filter with 99% or greater efficiency.		
4a	Walk-behind saws when used outdoors	• Use saw equipped with integrated water delivery system that continuously feeds water to the blade. • Operate and maintain tool in accordance with manufacturer's instructions to minimize dust emissions.	None	None
4b	Walk-behind saws when used indoors or in an enclosed area	• Use saw equipped with integrated water delivery system that continuously feeds water to the blade. • Operate and maintain tool in accordance with manufacturer's instructions to minimize dust emissions.	N95 (or Greater Efficiency) Filtering Facepiece or Half Mask	N95 (or Greater Efficiency) Filtering Facepiece or Half Mask
5	Drivable saws for tasks performed outdoors only	• Use saw equipped with integrated water delivery system that continuously feeds water to the blade. • Operate and maintain tool in accordance with manufacturer's instructions to minimize dust emissions.	None	None
6	Rig-mounted core saws or drills	• Use tool equipped with integrated water delivery system that supplies water to cutting surface. • Operate and maintain tool in accordance with manufacturer's instructions to minimize dust emissions.	None	None
7	Handheld and stand-mounted drills (including impact and rotary hammer drills)	• Use drill equipped with commercially available shroud or cowling with dust collection system.	None	None

Construction Task or Equipment Operation		Engineering and Work Practice Control Methods	Required Respiratory Protection	
			≤ 4 hours/shift	>4 hours/shift
		• Operate and maintain tool in accordance with manufacturer's instructions to minimize dust emissions. • Dust collector must provide the air flow recommended by the tool manufacturer, or greater, and have a filter with 99% or greater efficiency and a filter-cleaning mechanism. • Use a HEPA-filtered vacuum when cleaning holes.		
8	Dowel drilling rigs for concrete for tasks performed outdoors only	• Use shroud around drill bit with a dust collection system. • Dust collector must have a filter with 99% or greater efficiency and a filter cleaning mechanism. • Use a HEPA-filtered vacuum when cleaning holes.	N95 (or Greater Efficiency) Filtering Facepiece or Half Mask	N95 (or Greater Efficiency) Filtering Facepiece or Half Mask
9a	Vehicle-mounted drilling rigs for rock and concrete	• Use dust collection system with close capture hood or shroud around drill bit with a low-flow water spray to wet the dust at the discharge point from the dust collector.	None	None
9b	Vehicle-mounted drilling rigs for rock and concrete	• Operate from within an enclosed cab and use water for dust suppression on drill bit.	None	None
10a	Jackhammers and handheld powered chipping tools when used outdoors	• Use tool with water delivery system that supplies a continuous stream or spray of water at the point of impact.	None	N95 (or Greater Efficiency) Filtering Facepiece or Half Mask
10b	Jackhammers and handheld powered chipping tools when used	• Use tool with water delivery system that supplies a continuous stream or spray of water at the point of impact.	N95 (or Greater Efficiency) Filtering Facepiece	N95 (or Greater

Construction Task or Equipment Operation		Engineering and Work Practice Control Methods	Required Respiratory Protection	
			≤ 4 hours/shift	>4 hours/shift
	indoors or in an enclosed area		or Half Mask	Efficiency) Filtering Facepiece or Half Mask
10c	Jackhammers and handheld powered chipping tools when used outdoors	• Use tool equipped with commercially available shroud and dust collection system. • Operate and maintain tool in accordance with manufacturer's instructions to minimize dust emissions. • Dust collector must provide the air flow recommended by the tool manufacturer, or greater, and have a filter with 99% or greater efficiency and a filter-cleaning mechanism.	None	N95 (or Greater Efficiency) Filtering Facepiece or Half Mask
10d	Jackhammers and handheld powered chipping tools when used indoors or in an enclosed area	• Use tool equipped with commercially available shroud and dust collection system. • Operate and maintain tool in accordance with manufacturer's instructions to minimize dust emissions. • Dust collector must provide the air flow recommended by the tool manufacturer, or greater, and have a filter with 99% or greater efficiency and a filter-cleaning mechanism.	N95 (or Greater Efficiency) Filtering Facepiece or Half Mask	N95 (or Greater Efficiency) Filtering Facepiece or Half Mask
11	Handheld grinders for mortar removal (i.e., tuckpointing)	• Use grinder equipped with commercially available shroud and dust collection system. • Operate and maintain tool in accordance with manufacturer's instructions to minimize dust emissions.	N95 (or Greater Efficiency) Filtering Facepiece or Half Mask	Powered Air-Purifying Respirator (PAPR) with P100 Filters

Construction Task or Equipment Operation		Engineering and Work Practice Control Methods	Required Respiratory Protection	
			≤ 4 hours/shift	>4 hours/shift
		• Dust collector must provide 25 cubic feet per minute (cfm) or greater of airflow per inch of wheel diameter and have a filter with 99% or greater efficiency and a cyclonic pre-separator or filter-cleaning mechanism.		
12a	Handheld grinders for uses other than mortar removal for tasks performed outdoors only	• Use grinder equipped with integrated water delivery system that continuously feeds water to the grinding surface. • Operate and maintain tool in accordance with manufacturer's instructions to minimize dust emissions.	None	None
12b	Handheld grinders for uses other than mortar removal when used outdoors	• Use grinder equipped with commercially available shroud and dust collection system. • Operate and maintain tool in accordance with manufacturer's instructions to minimize dust emissions. • Dust collector must provide 25 cubic feet per minute (cfm) or greater of airflow per inch of wheel diameter and have a filter with 99% or greater efficiency and a cyclonic pre-separator or filter-cleaning mechanism.	None	None
12c	Handheld grinders for uses other than mortar removal when	• Use grinder equipped with commercially available shroud and dust collection system. • Operate and maintain tool in accordance with manufacturer's	None	N95 (or Greater Efficiency) Filtering Facepiece

Construction Task or Equipment Operation		Engineering and Work Practice Control Methods	Required Respiratory Protection	
			≤ 4 hours/shift	>4 hours/shift
	used indoors or in an enclosed area	instructions to minimize dust emissions. • Dust collector must provide 25 cubic feet per minute (cfm) or greater of airflow per inch of wheel diameter and have a filter with 99% or greater efficiency and a cyclonic pre-separator or filter-cleaning mechanism.		or Half Mask
13a	Walk-behind milling machines and floor grinders	• Use machine equipped with integrated water delivery system that continuously feeds water to the cutting surface. • Operate and maintain tool in accordance with manufacturer's instructions to minimize dust emissions.	None	None
13b	Walk-behind milling machines and floor grinders	• Use machine equipped with dust collection system recommended by the manufacturer. • Operate and maintain tool in accordance with manufacturer's instructions to minimize dust emissions. • Dust collector must provide the air flow recommended by the manufacturer, or greater, and have a filter with 99% or greater efficiency and a filter-cleaning mechanism. • When used indoors or in an enclosed area, use a HEPA-filtered vacuum to remove loose dust in between passes.	None	None
14	Small drivable milling machines (less than half-lane)	• Use a machine equipped with supplemental water sprays designed to suppress dust. • Water must be combined with a surfactant.	None	None

Construction Task or Equipment Operation		Engineering and Work Practice Control Methods	Required Respiratory Protection	
			≤ 4 hours/shift	>4 hours/shift
		• Operate and maintain machine to minimize dust emissions.		
15a	Large drivable milling machines (half-lane and larger) for cuts of any depth on asphalt only	• Use machine equipped with exhaust ventilation on drum enclosure and supplemental water sprays designed to suppress dust. • Operate and maintain machine to minimize dust emissions.	None	None
15b	Large drivable milling machines (half-lane and larger) for cuts of four inches in depth or less on any substrate	• Use machine equipped with exhaust ventilation on drum enclosure and supplemental water sprays designed to suppress dust. • Operate and maintain machine to minimize dust emissions.	None	None
15c	Large drivable milling machines (half-lane and larger) for cuts of four inches in depth or less on any substrate	• Use a machine equipped with supplemental water spray designed to suppress dust. • Water must be combined with a surfactant. • Operate and maintain machine to minimize dust emissions.	None	None
16	Crushing machines	• Use equipment designed to deliver water spray or mist for dust suppression at crusher and other points where dust is generated (e.g., hoppers, conveyers, sieves/sizing or vibrating components, and discharge points). • Operate and maintain machine in accordance with manufacturer's instructions to minimize dust emissions. • Use a ventilated booth that provides fresh, climate-controlled air to the operator, or a remote control station.	None	None

Construction Task or Equipment Operation		Engineering and Work Practice Control Methods	Required Respiratory Protection	
			≤ 4 hours/shift	>4 hours/shift
17a	Heavy equipment and utility vehicles used to abrade or fracture silica-containing materials (e.g., hoe-ramming, rock ripping) or used during demolition activities involving silica-containing materials	• Operate equipment from within an enclosed cab.	None	None
17b	Heavy equipment and utility vehicles used to abrade or fracture silica-containing materials (e.g., hoe-ramming, rock ripping) or used during demolition activities involving silica-containing materials	• When employees outside of the cab are engaged in the task, apply water and/or dust suppressants as necessary to minimize dust emissions.	None	None
18a	Heavy equipment and utility vehicles for tasks such as grading and excavating but not including demolishing, abrading, or fracturing silica-containing materials	• Apply water and/or dust suppressants as necessary to minimize dust emissions.	None	None

Construction Task or Equipment Operation		Engineering and Work Practice Control Methods	**Required Respiratory Protection**	
			≤ 4 hours/shift	**>4 hours/shift**
18b	Heavy equipment and utility vehicles for tasks such as grading and excavating but not including demolishing, abrading, or fracturing silica-containing materials	• When the equipment operator is the only employee engaged in the task, operate equipment from within an enclosed cab.	None	None

When implementing the control measures specified in Table 1, PNT Consulting LLC shall:

- For tasks performed indoors or in enclosed areas, provide a means of exhaust as needed to minimize the accumulation of visible airborne dust;
- For tasks performed using wet methods, apply water at flow rates sufficient to minimize release of visible dust;
- For measures implemented that include an enclosed cab or booth, ensure that the enclosed cab or booth:
    - Is maintained as free as practicable from settled dust;
    - Has door seals and closing mechanisms that work properly;
    - Has gaskets and seals that are in good condition and working properly;
    - Is under positive pressure maintained through continuous delivery of fresh air;
    - Has intake air that is filtered through a filter that is 95% efficient in the 0.3-10.0 µm range (e.g., MERV-16 or better); and

- Has heating and cooling capabilities.

- Where an employee performs more than one task included on OSHA's Construction Standard Table 1 during the course of a shift, and the total duration of all tasks combined is more than four hours, the required respiratory protection for each task is the respiratory protection specified for more than four hours per shift. If the total duration of all tasks on Table 1 combined is less than four hours, the required respiratory protection for each task is the respiratory protection specified for less than four hours per shift.

- Alternative Exposure Control Methods

Alternative Exposure Control Methods apply for tasks not listed in OSHA's Construction Standard Table 1, or where PNT Consulting LLC cannot not fully and properly implement the engineering controls, work practices, and respiratory protection described in Table 1.
First, PNT Consulting LLC will assess the exposure of each employee who is or may reasonably be expected to be exposed to Respirable Crystalline Silica at or above the Action Level in accordance with either the Performance Option or the Scheduled Monitoring Option.

- Performance Option – PNT Consulting LLC will assess the 8-hour TWA exposure for each employee on the basis of any combination of air monitoring data or objective data sufficient to accurately characterize employee exposures to Respirable Crystalline Silica.

- Scheduled Monitoring Option:

  - PNT Consulting LLC will perform initial monitoring to assess the 8-hour TWA exposure for each employee on the basis of one or more personal breathing zone air samples that reflect the exposures of employees on each shift, for each job classification, and in each work area. Where several employees perform the same tasks on the same shift and in the same work area, PNT Consulting LLC will plan to monitor a representative fraction of these employees. When using representative monitoring, PNT Consulting LLC will sample the employee(s) who are expected to have the highest exposure to Respirable Crystalline Silica.

  - If initial monitoring indicates that employee exposures are below the Action Level, PNT Consulting LLC will probably discontinue monitoring for those employees whose exposures are represented by such monitoring.

  - Where the most recent exposure monitoring indicates that employee exposures are at or above the Action Level but at or below the PEL, PNT Consulting LLC will repeat such monitoring within six months of the most recent monitoring.

- Where the most recent exposure monitoring indicates that employee exposures are above the PEL, PNT Consulting LLC will repeat such monitoring within three months of the most recent monitoring.

- Where the most recent (non-initial) exposure monitoring indicates that employee exposures are below the Action Level, PNT Consulting LLC will repeat such monitoring within six months of the most recent monitoring until two consecutive measurements, taken seven or more days apart, are below the Action Level, at which time PNT Consulting LLC will probably discontinue monitoring for those employees whose exposures are represented by such monitoring, except when a reassessment is required. PNT Consulting LLC will reassess exposures whenever a change in the production, process, control equipment, personnel, or work practices may reasonably be expected to result in new or additional exposures at or above the Action Level, or when PNT Consulting LLC has any reason to believe that new or additional exposures at or above the Action Level have occurred.

PNT Consulting LLC will ensure that all Respirable Crystalline Silica samples taken to satisfy the monitoring requirements of this program and OSHA are collected by a qualified individual (i.e. a Certified Industrial Hygienist) and the samples are evaluated by a qualified laboratory (i.e. accredited to ANS/ISO/IEC Standard 17025:2005 with respect to Crystalline Silica analyses by a body that is compliant with ISO/IEC Standard 17011:2004 for implementation of quality assessment programs).

Within five working days after completing an exposure assessment, PNT Consulting LLC will individually notify each affected employee in writing of the results of that assessment or post the results in an appropriate location accessible to all affected employees.

Whenever an exposure assessment indicates that employee exposure is above the PEL, PNT Consulting LLC will describe in the written notification the corrective action being taken to reduce employee exposure to or below the PEL.

Where air monitoring is performed, PNT Consulting LLC will provide affected employees or their designated representatives an opportunity to observe any monitoring of employee exposure to Respirable Crystalline Silica. When observation of monitoring requires entry into an area where the use of protective clothing or equipment is required for any workplace hazard, PNT Consulting LLC will provide the observer with protective clothing and equipment at no cost and shall ensure that the observer uses such clothing and equipment.

Once air monitoring has been performed, PNT Consulting LLC will determine its method of compliance based on the monitoring data and the hierarchy of controls. PNT Consulting LLC will use engineering and work practice controls to reduce and maintain employee exposure to Respirable Crystalline Silica to or below the PEL, unless PNT Consulting LLC can demonstrate that such controls are not feasible. Wherever such feasible engineering and work practice

controls are not sufficient to reduce employee exposure to or below the PEL, PNT Consulting LLC will nonetheless use them to reduce employee exposure to the lowest feasible level and shall supplement them with the use of respiratory protection.

In addition to the requirements of this program, PNT Consulting LLC will comply with other programs and OSHA standards (such as 29 CFR 1926.57 [Ventilation]), when applicable where abrasive blasting is conducted using Crystalline Silica-containing blasting agents, or where abrasive blasting is conducted on substrates that contain Crystalline Silica.

- Control Methods

PNT Consulting LLC will provide control methods that are either consistent with Table 1 or otherwise minimize worker exposures to Silica. These exposure control methods can include engineering controls, work practices, and respiratory protection. Listed below are control methods to be used when Table 1 is not followed:

List and discuss control methods

- Respiratory Protection

Where respiratory protection is required by this program, PNT Consulting LLC will provide each employee an appropriate respirator that complies with the requirements of the company's Respiratory Protection Program and the OSHA Respiratory Protection Standard (29 CFR 1910.134).

Respiratory protection is required where specified by the OSHA Construction Standard Table 1, for tasks not listed in Table 1, or where the company has not fully and properly implemented the engineering controls, work practices, and respiratory protection described in Table 1. Situations requiring respiratory protection include:

- Where exposures exceed the PEL during periods necessary to install or implement feasible engineering and work practice controls;

- Where exposures exceed the PEL during tasks, such as certain maintenance and repair tasks, for which engineering and work practice controls are not feasible; and

- During tasks for which an employer has implemented all feasible engineering and work practice controls and such controls are not sufficient to reduce exposures to or below the PEL.

Housekeeping

PNT Consulting LLC does not allow dry sweeping or dry brushing where such activity could contribute to employee exposure to Respirable Crystalline Silica unless wet sweeping, HEPA-filtered vacuuming, or other methods that minimize the likelihood of exposure are not feasible.

PNT Consulting LLC does not allow compressed air to be used to clean clothing or surfaces where such activity could contribute to employee exposure to Respirable Crystalline Silica unless:

- The compressed air is used in conjunction with a ventilation system that effectively captures the dust cloud created by the compressed air; or
- No alternative method is feasible.
- Written Exposure Control Plan

When employee exposure on a construction project is expected to be at or above the Action Level, a Written Exposure Control Plan (ECP) will be established and implemented. This ECP will contain at least the following elements:

- A description of the tasks in the workplace that involve exposure to Respirable Crystalline Silica;
- A description of the engineering controls, work practices, and respiratory protection used to limit employee exposure to Respirable Crystalline Silica for each task;
- A description of the housekeeping measures used to limit employee exposure to Respirable Crystalline Silica; and
- A description of the procedures used to restrict access to work areas, when necessary, to minimize the number of employees exposed to Respirable Crystalline Silica and their level of exposure, including exposures generated by other employers or sole proprietors.

The written ECP will designate a Competent Person to make frequent and regular inspections of job sites, materials, and equipment to ensure the ECP is implemented.

The written ECP will be reviewed at least annually to evaluate the effectiveness of it and update it as necessary. Having said this, ECP's are project specific and most project durations do not exceed a year. The written ECP will be readily available for examination and copying, upon request, to each employee covered by this program and/or ECP, their designated representatives, and OSHA.

- Medical Surveillance

Medical surveillance will be made available for each employee who will be required to use a respirator for 30 or more days per year due to their Respirable Crystalline Silica exposure. Medical surveillance (i.e. medical examinations and procedures) will be performed by a PLHCP and provided at no cost to the employee at a reasonable time and place.

PNT Consulting LLC will make available an initial (baseline) medical examination within 30 days after initial assignment, unless the employee has received a medical examination that meets the requirements of the OSHA Respirable Crystalline Silica Construction Standard within the last three years. The examination shall consist of:

- A medical and work history, with emphasis on past, present, and anticipated exposure to Respirable Crystalline Silica, dust, and other agents affecting the respiratory system in addition to any history of respiratory system dysfunction, including signs and symptoms of respiratory disease (e.g., shortness of breath, cough, wheezing), history of tuberculosis, and smoking status and history;

- A physical examination with special emphasis on the respiratory system;

- A chest X-ray (a single postero-anterior radiographic projection or radiograph of the chest at full inspiration recorded on either film [no less than 14 x 17 inches and no more than 16 x 17 inches] or digital radiography systems) interpreted and classified according to the International Labour Office (ILO) International Classification of Radiographs of Pneumoconiosis by a NIOSH-certified B Reader;

- A pulmonary function test to include forced vital capacity (FVC) and forced expiratory volume in one second (FEV1) and FEV1/FVC ratio, administered by a spirometry technician with a current certificate from a NIOSH-approved spirometry course;

- Testing for latent tuberculosis infection; and

- Any other tests deemed appropriate by the PLHCP.

PNT Consulting LLC will make available medical examinations that include the aforementioned procedures (except testing for latent tuberculosis infection) at least every three years. If recommended by the PLHCP, periodic examinations can be more frequently than every three years.

PNT Consulting LLC will ensure that the examining PLHCP has a copy of the OSHA Respirable Crystalline Silica Construction Standard, this program, and the following information:

- A description of the employee's former, current, and anticipated duties as they relate to the employee's occupational exposure to Respirable Crystalline Silica;

- The employee's former, current, and anticipated levels of occupational exposure to Respirable Crystalline Silica;

- A description of any personal protective equipment (PPE) used or to be used by the employee, including when and for how long the employee has used or will use that equipment; and

- Information from records of employment-related medical examinations previously provided to the employee and currently within the control of PNT Consulting LLC.

PNT Consulting LLC will ensure that the PLHCP explains to the employee the results of the medical examination and provides each employee with a written medical report within 30 days of each medical examination performed. The written report shall contain:

- A statement indicating the results of the medical examination, including any medical condition(s) that would place the employee at increased risk of material impairment to health from exposure to Respirable Crystalline Silica and any medical conditions that require further evaluation or treatment;

- Any recommended limitations on the employee's use of respirators;

- Any recommended limitations on the employee's exposure to Respirable Crystalline Silica; and;

- A statement that the employee should be examined by a Specialist if the chest X-ray is classified as 1/0 or higher by the B Reader, or if referral to a Specialist is otherwise deemed appropriate by the PLHCP.

PNT Consulting LLC will also obtain a written medical opinion from the PLHCP within 30 days of the medical examination. The written opinion shall contain only the following in order to protect the employee’s privacy:

- The date of the examination;

- A statement that the examination has met the requirements of the OSHA Respirable Crystalline Silica Construction Standard; and

- Any recommended limitations on the employee's use of respirators.

If the employee provides written authorization, the written opinion shall also contain either or both of the following:

- Any recommended limitations on the employee's exposure to Respirable Crystalline Silica; and/or

- A statement that the employee should be examined by a Specialist if the chest X-ray is classified as 1/0 or higher by the B Reader, or if referral to a Specialist is otherwise deemed appropriate by the PLHCP.

If the PLHCP's written medical opinion indicates that an employee should be examined by a Specialist, PNT Consulting LLC will make available a medical examination by a Specialist within 30 days after receiving the PLHCP's written opinion. PNT Consulting LLC will ensure that the examining Specialist is provided with all of the information that the employer is obligated to provide to the PLHCP.

PNT Consulting LLC will ensure that the Specialist explains to the employee the results of the medical examination and provides each employee with a written medical report within 30 days of the examination. The written report will contain:

- A statement indicating the results of the medical examination, including any medical condition(s) that would place the employee at increased risk of material impairment to health from exposure to Respirable Crystalline Silica and any medical conditions that require further evaluation or treatment;

- Any recommended limitations on the employee's use of respirators; and

- Any recommended limitations on the employee's exposure to respirable crystalline Silica.

In addition, PNT Consulting LLC will obtain a written opinion from the Specialist within 30 days of the medical examination. The written opinion shall contain the following:

- The date of the examination;

- Any recommended limitations on the employee's use of respirators; and

- If the employee provides written authorization, the written opinion shall also contain any recommended limitations on the employee's exposure to Respirable Crystalline Silica.

- Hazard Communication

PNT Consulting LLC will include Respirable Crystalline Silica in the company’s Hazard Communication Program established to comply with the OSHA Hazard Communication Standard (29 CFR 1910.1200).

PNT Consulting LLC will ensure that each employee has access to labels on containers of Crystalline Silica and those containers respective Safety Data Sheets (SDS's).

All employees will be trained in accordance with the provisions of the OSHA Hazard Communication Standard and the Training Section of this program. This training will cover concerns relating to cancer, lung effects, immune system effects, and kidney effects.

PNT Consulting LLC will ensure that each employee with the potential to be exposed at or above the Action Level for Respirable Crystalline Silica can demonstrate knowledge and understanding of at least the following:

- The health hazards associated with exposure to Respirable Crystalline Silica;
- Specific tasks in the workplace that could result in exposure to Respirable Crystalline Silica;
- Specific measures PNT Consulting LLC has implemented to protect employees from exposure to Respirable Crystalline Silica, including engineering controls, work practices, and respirators to be used;
- The contents of the OSHA Respirable Crystalline Silica Construction Standard;
- The identity of the Competent Person designated by PNT Consulting LLC; and
- The purpose and a description of the company's Medical Surveillance Program.

PNT Consulting LLC will make a copy of the OSHA Respirable Crystalline Silica Construction Standard readily available without cost to any employee who requests it.

- Recordkeeping

PNT Consulting LLC will make and maintain an accurate record of all exposure measurements taken to assess employee exposure to Respirable Crystalline Silica. This record will include at least the following information:

- The date of measurement for each sample taken;
- The task monitored;
- Sampling and analytical methods used;
- Number, duration, and results of samples taken;

- Identity of the laboratory that performed the analysis;
- Type of personal protective equipment (PPE), such as respirators, worn by the employees monitored; and
- Name, social security number, and job classification of all employees represented by the monitoring, indicating which employees were actually monitored.

PNT Consulting LLC will ensure that exposure records are maintained and made available in accordance with 29 CFR 1910.1020. Exposure records will be kept for at least 30 years.

The employer shall make and maintain an accurate record of all objective data relied upon to comply with the requirements of the OSHA Respirable Crystalline Silica Construction Standard. This record shall include at least the following information:

- The Crystalline Silica-containing material in question;
- The source of the objective data;
- The testing protocol and results of testing;
- A description of the process, task, or activity on which the objective data were based; and
- Other data relevant to the process, task, activity, material, or exposures on which the objective data were based.

PNT Consulting LLC will ensure that objective data are maintained and made available in accordance with 29 CFR 1910.1020. Objective data records will be kept for at least 30 years.

PNT Consulting LLC will make and maintain an accurate record for each employee enrolled in the Medical Surveillance portion of this program. The record shall include the following information about the employee:

- Name and social security number;
- A copy of the PLHCPs' and/or Specialists' written medical opinions; and
- A copy of the information provided to the PLHCPs and Specialists.

PNT Consulting LLC will ensure that medical records are maintained and made available in accordance with 29 CFR 1910.1020. Medical records will be kept under lock and key for at least the duration of employment plus 30 years. It is necessary to keep these records for extended periods because Silica-related diseases such as cancer often cannot be detected until several

decades after exposure. However, if an employee works for an employer for less than one year, the employer does not have to keep the medical records after employment ends, as long as the employer gives those records to the employee.

- PROGRAM EVALUATION

This program will be reviewed and evaluated on an annual basis by the Safety Department unless changes to operations, the OSHA Respirable Crystalline Silica Construction Standard (29 CFR 1926.1153), or another applicable OSHA Standard require an immediate re-validation of this program.

- APPLICABLE FORMS

The following lists applicable forms relating to this program.

- **APPENDICES**

APPENDIX A - Written Exposure Control Plan (ECP) template

Written Silica Exposure Control Program

APPENDIX A - Written Exposure Control Plan (ECP) Template

Applicability and Scope

Applicability

This Written Exposure Control Plan (Plan) applies to **PNT Consulting LLC** personnel who are potentially exposed to airborne concentrations of respirable crystalline silica (silica) because of their work activities or proximity to the work locations where airborne silica is being emitted. This Plan also applies to **PNT Consulting LLC** superintendents, foremen, or safety personnel who may be responsible for overseeing a subcontractor's operations that have the potential to expose personnel to airborne concentrations of silica at or above regulatory and industry action levels and exposure limits.

Scope {ONLY ADDRESS ACTIVITIES PERFORMED}

This Plan describes the hazards associated with projects involving potential exposure to airborne concentrations of silica and the issues to be addressed during these projects. These projects include, but are not limited to:

- Use of stationary masonry saws used to cut concrete, tile, concrete masonry block, sheet rock, gypsum fiber roof board, or any other product containing quartz.
- Handheld power saws used to cut concrete, asphalt, concrete masonry block, sheet rock, gypsum fiber roof board, or any other product containing quartz.
- Walk-behind saws used to cut concrete or asphalt.
- Rig-mounted or free standing core saws or drills (including impact and rotary hammer drills) used to penetrate concrete, concrete masonry block, sheet rock, gypsum fiber roof board, or any other structural component or product containing quartz.
- Jackhammers and handheld powered chipping tools used to demolish or modify concrete, concrete masonry block, or any other structural component or product containing quartz.
- Vehicle mounted hammers or chipping tools used to demolish concrete, concrete masonry block, or any other structural component or product containing quartz.
- Handheld grinders or cut-off wheels used for mortar removal or cutting/grinding of concrete, concrete masonry block, sheet rock, gypsum fiber roof board, or any other structural component or product containing quartz.
- Walk-behind milling machines or bead blasters used for surfacing activities on concrete, concrete masonry block, asphalt, or any other product containing quartz.
- Installation or demolition of sheet rock, including mudding, taping, texturizing activities with quartz containing materials.
- Hand or power tool sanding of painted surfaces. Current latex paint products contain quartz and the painted substrate (sheet rock, concrete masonry block, concrete) contains quartz.
- Drivable asphalt milling machines used to mill asphalt roadways or walkways.
- Ball mills or crushing equipment used to size products containing quartz.

- All housekeeping operations associated with the activities described above.

PNT Consulting LLC employees who work in proximity to silica-related operations must be aware of safe work practices and take all necessary precautions associated with avoiding and minimizing airborne silica exposure.

Regulatory Review

Occupational Safety and Health Administration (OSHA) 29 CFR 1926.1153: Respirable Crystalline Silica (Construction Industry) and 29 CFR 1910.1053: Respirable Crystalline Silica (General Industry), contain regulatory requirements specific to respirable crystalline silica. This Written Exposure Control Plan is developed in accordance with the requirements in 29 CFR 1926.1153(g).

Project Planning

Training Requirements

PNT Consulting LLC employees who anticipate working on projects where they could be exposed to airborne silica will be provided training in silica hazards in accordance the **PNT Consulting LLC** program established to comply with the hazard communication standard (29 CFR 1910.1200). Each employee will have access to labels on containers of crystalline silica and safety data sheets, and be provided information on the health hazards of silica including cancer, lung effects, immune system effects, and kidney effects. In addition, **PNT Consulting LLC** employees will be provided training and information regarding specific activities identified in this Plan that could result in airborne silica exposure, and the specific engineering controls, work practices and respiratory protection requirements to mitigate the potential airborne silica exposures. This training will provide a discussion of silica hazards, initial exposure determination either by complying with 29 CFR 1926.1153 Table 1 requirements or air monitoring, specific engineering and work practice control measures, personal protective equipment (PPE), and medical surveillance requirements. The training will also identify the **PNT Consulting LLC** competent person for silica exposure identification and determination of control requirements. All **PNT Consulting LLC** employees will be provided with access to a copy of 29 CFR 1910.1153 and be trained on the contents of 29 CFR 1926.1153.

Medical Surveillance Requirements

PNT Consulting LLC shall institute medical surveillance for any employees required by this Plan to where a respirator 30 or more days per year. Initial medical surveillance consists of medical and work history with emphasis on: past, present, and anticipated exposure to silica, dust and other agents affecting the respiratory system; any history of respiratory system dysfunction, including signs and symptoms of respiratory disease (e.g., shortness of breath, cough, wheezing); history of tuberculosis; and smoking status and history; a physical examination with emphasis on the respiratory system; chest X-ray (a single posterio-anterior radiographic projection or

radiograph of the chest at full inspiration recorded on either film (no less than 14 x 17 inches and no more than 16 x 17 inches) or digital radiography systems), interpreted and classified according to the International Labor Office (ILO) International Classification of Radiographs of Pneumoconiosis by a NIOSH-certified B Reader; a pulmonary function test to include forced vital capacity (FVC) and forced expiratory volume in one second (FEV1) and FEV1/FVC ratio, administered by a spirometry technician with a current certificate from a NIOSH approved spirometry course; testing for latent tuberculosis infection; and any other tests deemed appropriate by the Occupational Medicine Provider. Subcontractors are responsible for implementing a medical surveillance program for their employees.

Competent Person Requirements

PNT Consulting LLC shall identify a competent person to inspect and oversee all activities with potential airborne silica exposure. Subcontractors working on projects within the scope of this Program shall appoint a competent person capable of executing the duties described herein. The competent person must have training in the inspection of work areas and equipment and in the determination of safe working conditions. This person shall have a working knowledge of the 1926.1153 standards, shall be capable of identifying airborne silica hazards, shall determine the need for initial and additional exposure monitoring, shall recommend and implement engineering and work practice controls, shall establish levels of PPE, and shall have the authority to take action to eliminate hazards and correct incidences of noncompliance.

Planning Activities

Projects where anticipated activities involve concrete cutting, grinding, sandblasting, drilling, coring, or other abrasive operations are treated as potential sources for airborne silica exposure. Additionally, existing structures and materials such as sheetrock, any painted surfaces with low volatile organic compounds, tile, brick, or some insulation products may contain silica. Likewise, new material installation may involve silica-containing mortar, paints, or insulation. Where process knowledge indicates the presence of silica, **PNT Consulting LLC** will either implement all controls required by 1926.1153 Table 1- Exposure Control Methods for Selected Construction Operations or conduct an initial determination in accordance with 29 CFR 1926.1153(d)(2).

Project Execution

Safe Work Practices

The requirements of this section are to be followed by **PNBT Consulting LLC** employees, who may be exposed to airborne concentrations of silica at or above the regulatory limits.

Exposure Assessment

PNT Consulting LLC will either comply will with and implement all controls required by 1926.1153 Table 1- Exposure Control Methods for Selected Construction Operations or conduct an initial determination in accordance with 29 CFR 1926.1153(d)(2). {COMPANY NAME} must detail here the specific activities that they perform with potential for airborne silica exposure and identify all requirements specified in 1926.1153 Table 1 or describe the exposure assessment they will perform to determine airborne silica exposure levels and the required interim control measures that will be used to protect employees until the exposure levels have been established and final control measures can be identified. If not following 1926.1153 Table 1 requirements or performing an activity with potential airborne silica exposure not identified in Table 1 the exposure assessment must contain elements listed below.

- An exposure assessment is required when employees may be exposed to airborne silica at or above the action level in order to determine the extent to which employees are exposed and the appropriate exposure controls required.
- An initial determination of exposure shall be made at the beginning of operations. The determination shall consist of the collection of personal air samples representative of a full shift including at least one sample for each job classification in each work area, either for each shift, or for the shift with the highest exposure level.
- During the initial determination, until such time that actual airborne concentrations are determined, personnel shall be protected by respiratory protection based on task- specific anticipated airborne concentrations of silica as illustrated in Table 2 below:
- During the initial determination, and in addition to the levels of respiratory protection required, personnel shall be provided with protective clothing and equipment, hygiene facilities, and training.
- Whenever a change in equipment, process, controls, or personnel occurs, or a new task has been initiated, an additional exposure assessment is required.
- When an assessment determines that exposure has occurred above the action level but below the PEL, additional monitoring shall be required at least every 6 months. Additional monitoring shall continue until such time that the monitoring results fall below the action level on two separate occasions at least 7 days apart.
- When monitoring yields results above the PEL, then quarterly monitoring is required. In addition, the quarterly monitoring may be suspended when additional monitoring results fall below the action level on two separate occasions at least 7 days apart.
- Where the competent person can clearly demonstrate, in the absence of air monitoring data, that a work activity will not create airborne silica concentrations in excess of the action level, then air monitoring may be unwarranted. Where a negative initial determination is reached without air monitoring, the competent person must develop a written explanation as to why exposures are not expected to exceed the action level.

Communication of Hazards

- Each employee shall be provided training and demonstrate knowledge and understanding of the following:
    - Health hazards associated with exposure to respirable crystalline silica
    - Specific tasks that could result in exposure to respirable crystalline silica
    - Specific measures that are required to protect employees from exposure to respirable crystalline silica, including engineering controls, work practices, and required use of respiratory protection
    - The contents of the 29 CFR 1926.1153
    - The identity of the competent person
    - Purpose and description of the medical surveillance program
- A written compliance program shall be made available to all affected employees.
- In addition, notification to owners, contractors, and other personnel working in the area shall be made.

Control Methods

- Engineering and work practice controls, including administrative controls, shall be implemented to reduce and maintain employee exposure to silica at or below the PEL, to the extent that such controls are feasible.
- Where all feasible engineering and work practice controls that can be instituted are not sufficient to reduce employee exposure to or below the PEL, such controls shall be used, nonetheless, to reduce employee exposure to the lowest feasible level (and in conjunction with respiratory protection).
- Respiratory protection shall be selected based on guidance in 1926.1153 Table 1 or based on a Certified Industrial Hygienist's or competent person's assessment of the potential airborne exposure that may be created by the means and methods of work (high energy operations with high airborne dust generation or low energy operations with low dust generation).
- When using mechanical ventilation to control exposure, regularly evaluate the system's ability to effectively control exposure.
- If administrative controls are used to limit exposure, establish and implement a job rotation schedule that includes employee identification as well as the duration and exposure levels at each job or work station where each affected employee is located.

- A written compliance program shall be established and implemented prior to the start of operations within the scope of this Written Compliance Plan. The written program shall outline the plans for maintaining employee exposure below the PEL.
- Maintain all surfaces as free as possible from accumulations of silica. Select methods for cleaning surfaces and floors that minimize the likelihood of silica becoming airborne (such as using a HEPA vacuum).
- If vacuuming is the method selected, specialized vacuums with HEPA filtration are required. Methods to use and empty vacuums in a manner that minimizes the reentry of silica into the workplace shall be described and used. Use of household vacuums with HEPA filters are not allowed at any time for the collection of dust or debris that contains silica.
- Never use compressed air to remove silica from any surface unless it is used in conjunction with a ventilation system designed to capture the airborne dust created while using the compressed air.
- Employees shall not eat, drink, smoke, chew tobacco or gum, or apply cosmetics in any areas where exposure to silica is above the PEL (in other words, regulated areas).
- Do not allow employees to leave the workplace wearing any protective clothing or equipment that is required to be worn during their work shift without HEPA vacuum removal of dust.
- Where feasible, install shower facilities and require employees who work in regulated areas to shower at the end of their work shift. Also provide an adequate supply of cleaning agents and clean towels.
- Provide hand washing facilities for use by employees working in regulated areas. Furthermore, require employees to wash their hands and face at the end of the work shift and prior to eating or entering eating facilities, drinking, smoking, or applying cosmetics.
- Eating facilities or areas shall be provided for employees working in regulated areas. These facilities shall be maintained free of silica contamination and shall be readily accessible to those employees.

Personal Protective Equipment (PPE)

Respiratory protection must be used for the following conditions:

- During periods when employee exposure to airborne silica exceeds the PEL
- For work operations where engineering and work-practice controls are not sufficient to reduce employee exposure to or below the PEL
- During periods when an employee requests a respirator

- During periods when respirators are required to provide interim protection while conducting initial exposure assessments
- Powered air-purifying respirators (PAPR) shall be provided to employees who request such a respirator to use where it will provide adequate protection.
- Employees shall be provided, at no cost, protective work clothing and equipment including cotton coveralls or similar full-body clothing, gloves, hats, shoes or disposable shoe coverlets, face shields, vented goggles, or other appropriate PPE.